CLK-A08SV045-DR-B1

8.4" SVGA LED LCD Panel w/ 5-wire Resistive Touch Kit &

A/D Board Kit

Content:

Appendix A: Specification of TFT G084SN05 V9

Appendix B: Specification of Touch 10084002 V01

Appendix C: Specification of Touch Controller Board CAB-MB-MER4050UEBG-02

Appendix D: Specification of A/D Board Kit CAB-F2281L-01 (VGA/DVI)

Specification

Of

TFT G084SN05 V9

☐ **Preliminary Specifications**
■ **Final Specifications**

Module	8.4 Inch Color TFT-LCD
Model Name	G084SN05 V9

Customer	**Date**	**Approved by**	**Date**
		Leader Feng	2011/12/28
Checked & Approved by		**Prepared by**	
		Daniel PY Tsai	2011/12/28

Note: This Specification is subject to change without notice.

General Display Business Division / AU Optronics corporation

Contents

1. Operating Precautions 4
2. General Description 5
2.1 Display Characteristics 5
2.2 Optical Characteristics 6
3. Functional Block Diagram 9
4. Absolute Maximum Ratings 10
4.1 Absolute Ratings of TFT LCD Module 10
4.2 Absolute Ratings of Environment 10
5. Electrical Characteristics 11
5.1 TFT LCD Module 11
5.2 Backlight Unit 13
6. Signal Characteristic 14
6.1 Pixel Format Image 14
6.2 Signal Description 15
6.3 Scanning Direction 16
6.4 The Input Data Format 17
6.5 Interface Timing 18
6.6 Power ON/OFF Sequence 19
7. Connector & Pin Assignment 21
7.1 TFT LCD Signal (CN1): LVDS Connector 21
7.2 LED Backlight Unit (CN2): LED Driver Connector 21
7.3 LED Light Bar Input Connector (CN3): 22
8. Reliability Test Criteria 22
9. Mechanical Characteristics 23
9.1 LCM Front View 23
9.2 LCM Rear View 24
10. Label and Packaging 25
10.1 Shipping Label (on the rear side of TFT-LCD display) 25
10.2 Carton Package 25
11 Safety 26
11.1 Sharp Edge Requirements 26
11.2 Materials 26
11.3 Capacitors 26
11.4 National Test Lab Requirement 26

ICP Deutschland GmbH | +49(0)7121-14323-20 | sales@icp-deutschland.de | www.icp-deutschland.de

Record of Revision

Version and Date	Page	Old description	New Description
0.0 2011/04/07		First Edition	
0.1 2011.08/01	5		Update Input Voltage, Power Consumption, Weight
	6		Update Response Time
	11		Update Power Specification
	13		Update Parameter guideline for LED backlight
	20, 21		Update LED Connector, Cable Color
1.0 2011/12/28	6	White Luminance condition @ I_F= 80mA	White Luminance condition @ I_F= 50mA
	6	TBD	Update Optical Characteristics spec.
	13	TBD	Update Parameter guideline for LED backlight
	22, 23	LCM Front, Rear View	Update LCM Front, Rear View

ICP Deutschland GmbH | +49(0)7121-14323-20 | sales@icp-deutschland.de | www.icp-deutschland.de

1. Operating Precautions

1) Since front polarizer is easily damaged, please be cautious not to scratch it.
2) Be sure to turn off power supply when inserting or disconnecting from input connector.
3) Wipe off water drop immediately. Long contact with water may cause discoloration or spots.
4) When the panel surface is soiled, wipe it with absorbent cotton or soft cloth.
5) Since the panel is made of glass, it may be broken or cracked if dropped or bumped on hard surface.
6) To avoid ESD (Electro Static Discharde) damage, be sure to ground yourself before handling TFT-LCD Module.
7) Do not open nor modify the module assembly.
8) Do not press the reflector sheet at the back of the module to any direction.
9) In case if a module has to be put back into the packing container slot after it was taken out from the container, do not press the center of the LED Reflector edge. Instead, press at the far ends of the LED Reflector edge softly. Otherwise the TFT Module may be damaged.
10) At the insertion or removal of the Signal Interface Connector, be sure not to rotate nor tilt the Interface Connector of the TFT Module.
11) After installation of the TFT Module into an enclosure (Notebook PC Bezel, for example), do not twist nor bend the TFT Module even momentary. At designing the enclosure, it should be taken into consideration that no bending/twisting forces are applied to the TFT Module from outside. Otherwise the TFT Module may be damaged.
12) Small amount of materials having no flammability grade is used in the LCD module. The LCD module should be supplied by power complied with requirements of Limited Power Source (IEC60950 or UL1950), or be applied exemption.
13) Severe temperature condition may result in different luminance, response time.
14) Continuous operating TFT-LCD Module under high temperature environment may accelerate LED light bar exhaustion and reduce luminance dramatically.
15) The data on this specification sheet is applicable when LCD module is placed in landscape position.
16) Continuous displaying fixed pattern may induce image sticking. It is recommended to use screen saver or shuffle content periodically if fixed pattern is displayed on the screen.

ICP Deutschland GmbH | +49(0)7121-14323-20 | sales@icp-deutschland.de | www.icp-deutschland.de

2. General Description

This specification applies to the 8.4 inch color TFT LCD module G084SN05 V9.

G084SN05 V9 designed with wide viewing angle; wide operating temperature and long life LEDs backlight is well suited to be the display units for Industrial Applications.

LED driving board for backlight unit is included in this panel and the structure of the LED units is replaceable.

G084SN05 V9 is built in timing controller and LVDS interface.

The screen format is intended to support the SVGA (800(H) x 600(V)) screen and 16.2M (RGB 8-bits) or 262k colors (RGB 6-bits).

G084SN05 V9 is a RoHS product.

2.1 Display Characteristics

The following items are characteristics summary on the table under 25°C condition:

Items	Unit	Specifications
Screen Diagonal	[inch]	8.4 (213.4mm)
Active Area	[mm]	170.4(H) x 127.8(V)
Pixels H x V		800x3(RGB) x 600
Pixel Pitch	[mm]	0.213x 0.213
Pixel Arrangement		R.G.B. Vertical Stripe
Display Mode		TN, Normally White
Nominal Input Voltage VDD	[Volt]	3.3 (typ)
Typical Power Consumption	[Watt]	2.94 (typ)
Weight	[Grams]	250 (typ)
Physical Size	[mm]	203.0(W) x 142.5(H) x 8.0(D) (typ.)
Electrical Interface		1 channel LVDS
Surface Treatment		Anti-glare, Hardness 3H
Support Color		262K(6-bit) / 16.2M(8-bit)
Temperature Range Operating Storage (Non-Operating)	 [°C] [°C]	 -30 to +85 (panel surface temperature) -30 to +85
RoHS Compliance		RoHS Compliance

ICP Deutschland GmbH | +49(0)7121-14323-20 | sales@icp-deutschland.de | www.icp-deutschland.de

2.2 Optical Characteristics

The optical characteristics are measured under stable conditions at 25° C (Room Temperature):

Item	Unit	Conditions	Min.	Typ.	Max.	Note
White Luminance	[cd/m2]	I_F= 50mA (center point)	350	450	-	1
Uniformity	%	9 Points	70	75	-	1, 2, 3
Contrast Ratio			400	600	-	4
Response Time	[msec]	Rising	-	20	30	5
	[msec]	Falling	-	10	20	
	[msec]	Raising + Falling	-	30	50	
Viewing Angle	[degree]	Horizontal (Right) CR ≧ 10	70	80	-	6
	[degree]	(Left)	70	80	-	
	[degree]	Vertical (Upper) CR ≧ 10	65	80	-	
	[degree]	(Lower)	50	60	-	
Color / Chromaticity Coordinates (CIE 1931)		Red x	0.559	0.609	0.659	1
		Red y	0.283	0.333	0.383	
		Green x	0.315	0.365	0.415	
		Green y	0.520	0.570	0.620	
		Blue x	0.101	0.151	0.201	
		Blue y	0.056	0.106	0.156	
		White x	0.26	0.31	0.36	
		White y	0.28	0.33	0.38	
Color Gamut	%			45	-	1

Note 1: Measurement method

Equipment : Pattern Generator, Power Supply, Digital Voltmeter, Luminance meter (SR_3 or equivalent)

Aperture 1° with 50cm viewing distance

Test Point Center

Environment *< 1 lux*

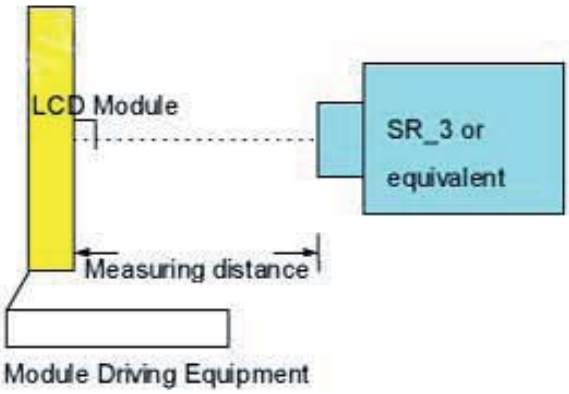

ICP Deutschland GmbH | +49(0)7121-14323-20 | sales@icp-deutschland.de | www.icp-deutschland.de

Note 2: Definition of 9 points position (Display active area : 170.4(H) x 127.8(V))

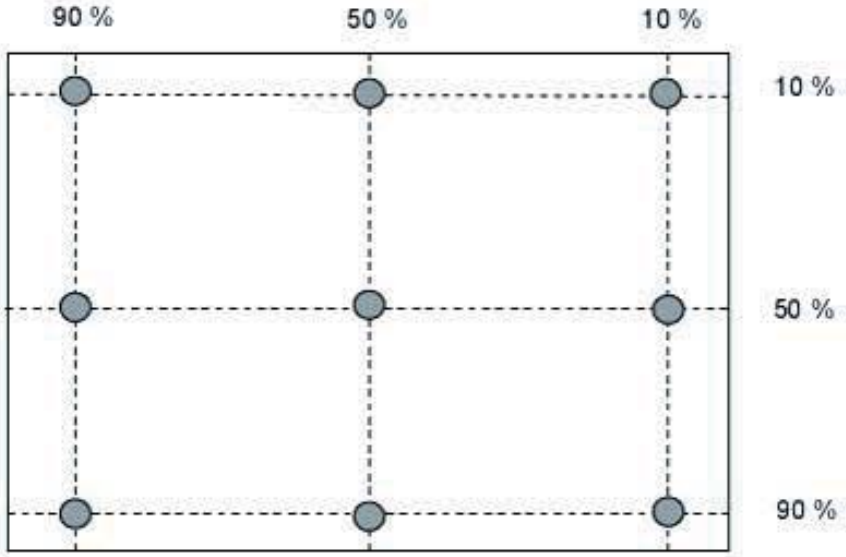

Note 3: The luminance uniformity of 9 points is defined by dividing the minimum luminance value by the maximum test point luminance

$$\delta_{W9} = \frac{\text{Minimum Brightness of nine points}}{\text{Maximum Brightness of nine points}}$$

Note 4 : Definition of contrast ratio (CR):

$$\text{Contrast ratio (CR)} = \frac{\text{Brightness on the "White" state}}{\text{Brightness on the "Black" state}}$$

Note 5: Definition of response time:

The output signals of photo detector are measured when the input signals are changed from "White" to "Black" (falling time) and from "Black" to "White" (rising time), respectively. The response time interval is between 10% and 90% of amplitudes. Please refer to the figure as below.

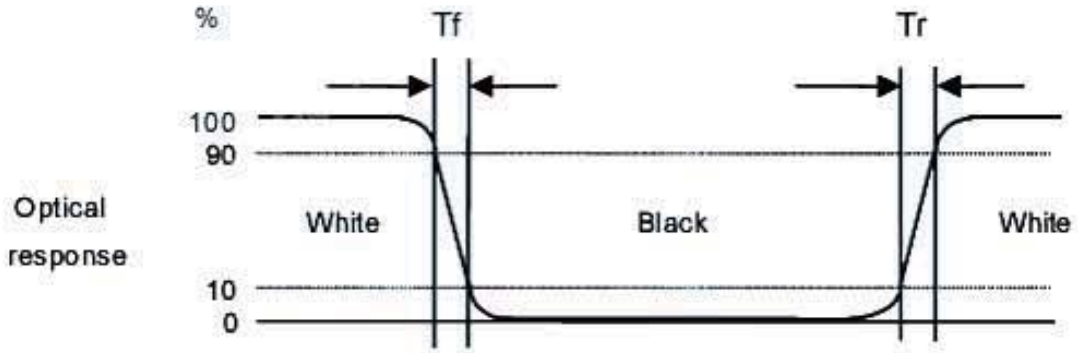

ICP Deutschland GmbH | +49(0)7121-14323-20 | sales@icp-deutschland.de | www.icp-deutschland.de

Note 6: Definition of viewing angle

Viewing angle is the measurement of contrast ratio ≧10, at the screen center, over a 180° horizontal and 180° vertical range (off-normal viewing angles). The 180° viewing angle range is broken down as below: 90° (θ) horizontal left and right, and 90° (Φ) vertical high (up) and low (down). The measurement direction is typically perpendicular to the display surface with the screen rotated to its center to develop the desired measurement viewing angle.

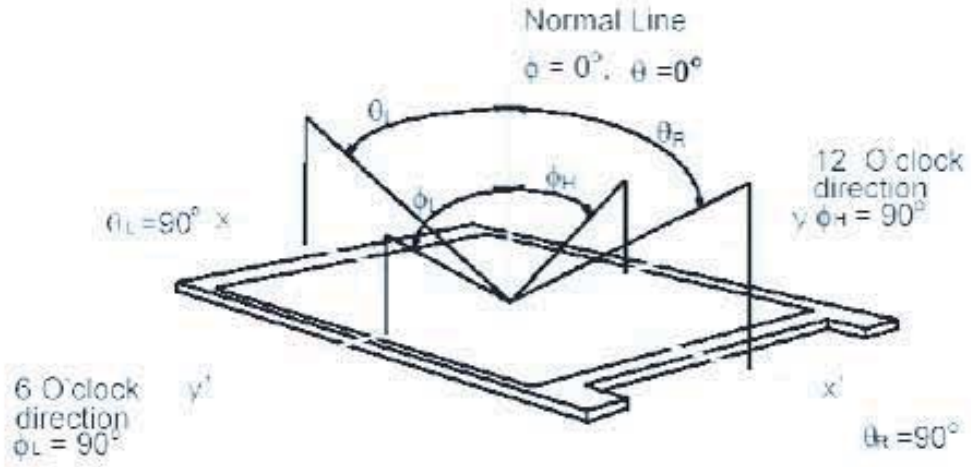

ICP Deutschland GmbH | +49(0)7121-14323-20 | sales@icp-deutschland.de | www.icp-deutschland.de

3. Functional Block Diagram

The following diagram shows the functional block of the 8.4 inch color TFT/LCD module:

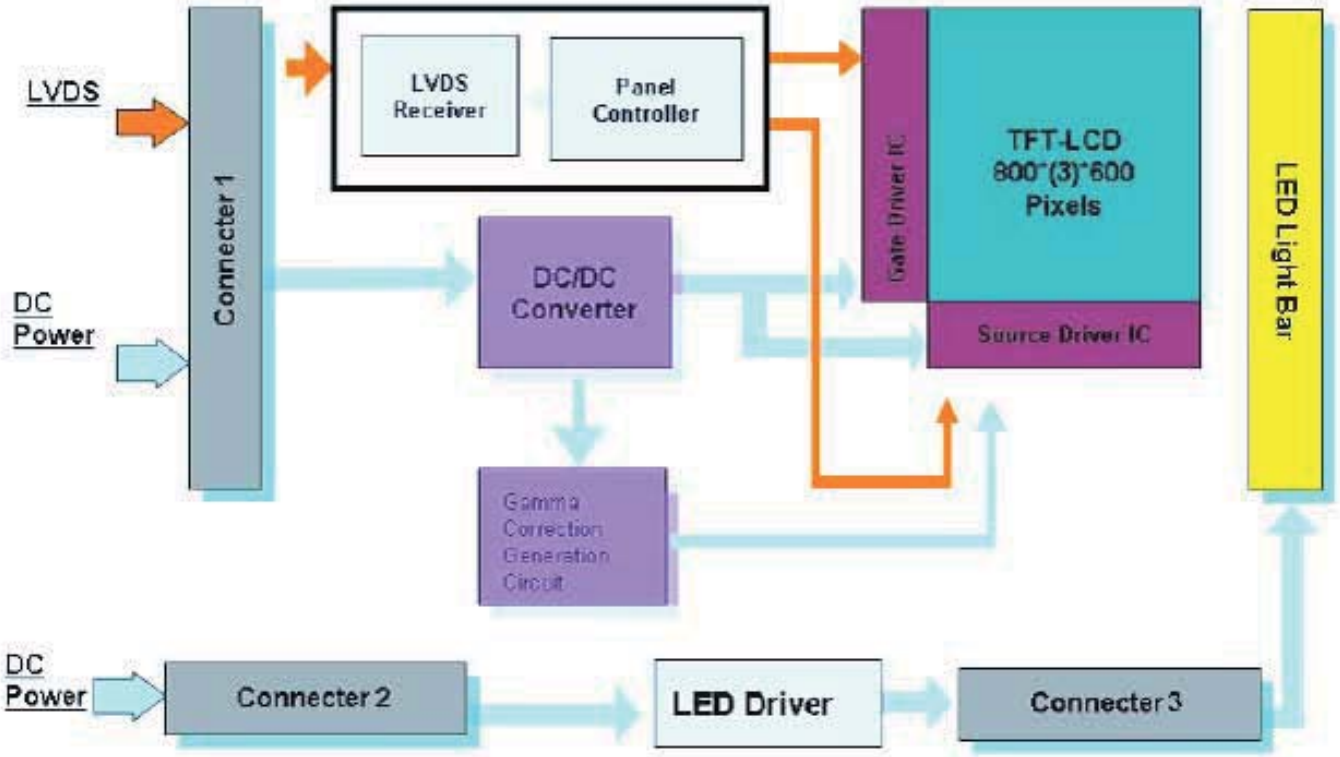

ICP Deutschland GmbH | +49(0)7121-14323-20 | sales@icp-deutschland.de | www.icp-deutschland.de

4. Absolute Maximum Ratings

4.1 Absolute Ratings of TFT LCD Module

Item	Symbol	Min	Max	Unit	Conditions
Logic/LCD Drive Voltage	VDD	-0.3	+3.6	[Volt]	

4.2 Absolute Ratings of Environment

Item	Symbol	Min	Max	Unit
Operating Temperature	TOP	-30	+85	[°C]
Operation Humidity	HOP	5	90	[%RH]
Storage Temperature	TST	-30	+85	[°C]
Storage Humidity	HST	5	90	[%RH]

Note: Maximum Wet-Bulb should be 390C and no condensation.

ICP Deutschland GmbH | +49(0)7121-14323-20 | sales@icp-deutschland.de | www.icp-deutschland.de

5. Electrical Characteristics

5.1 TFT LCD Module

5.1.1 Power Specification

Symbol	Parameter	Min	Typ	Max	Units	Remark
VDD	Logic/LCD Drive Voltage	3.0	3.3	3.6	[Volt]	±10%
I_{VDD}	VDD Current	-	270	330	[mA]	64 Gray Bar Pattern (VDD=3.3V, at 60Hz)
P_{VDD}	VDD Power	-	0.9	1.2	[Watt]	64 Gray Bar Pattern (VDD=3.3V, at 60Hz)

Note 1: Measurement condition:

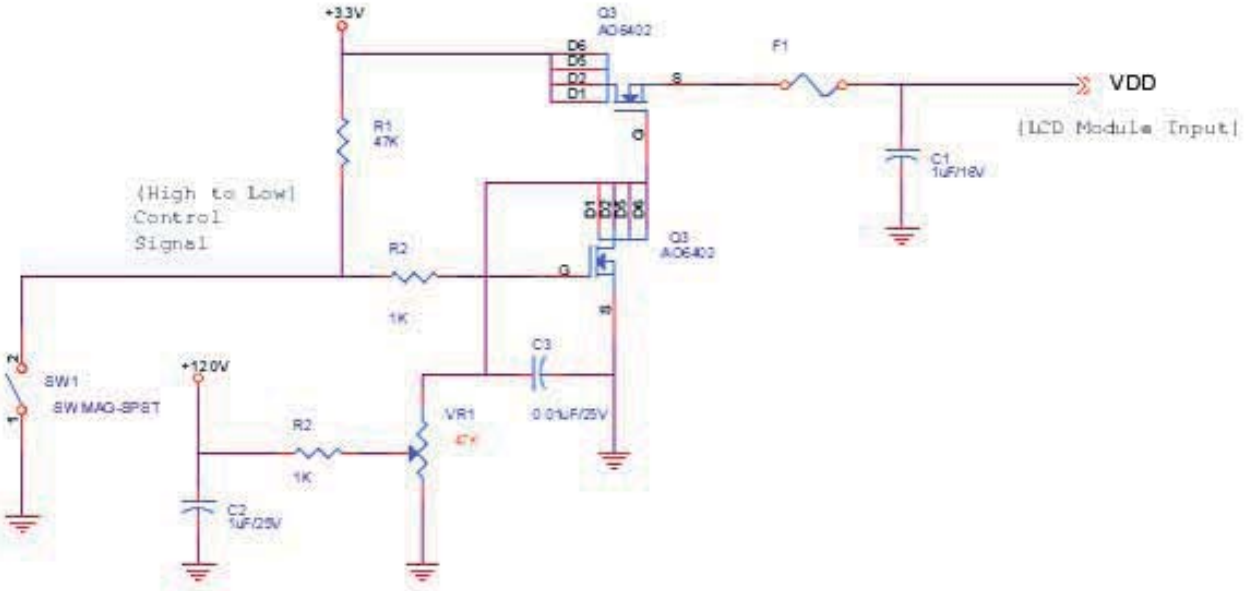

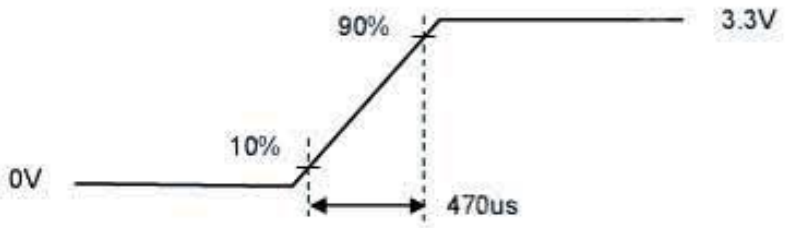

VDD rising time

64 Gray pattern

ICP Deutschland GmbH | +49(0)7121-14323-20 | sales@icp-deutschland.de | www.icp-deutschland.de

5.1.2 Signal Electrical Characteristics

Input signals shall be low or Hi-Z state when VDD is off.

Symbol	Item	Min.	Typ.	Max.	Unit	Remark
VTH	Differential Input High Threshold	-	-	100	[mV]	VICM=1.2V
VTL	Differential Input Low Threshold	-100	-	-	[mV]	VICM=1.2V
| VID |	Input Differential Voltage	100	400	600	[mV]	
VICM	Differential Input Common Mode Voltage	1.1		1.6	[V]	VTH/VTL=±100mV

Note: LVDS Signal Waveform.

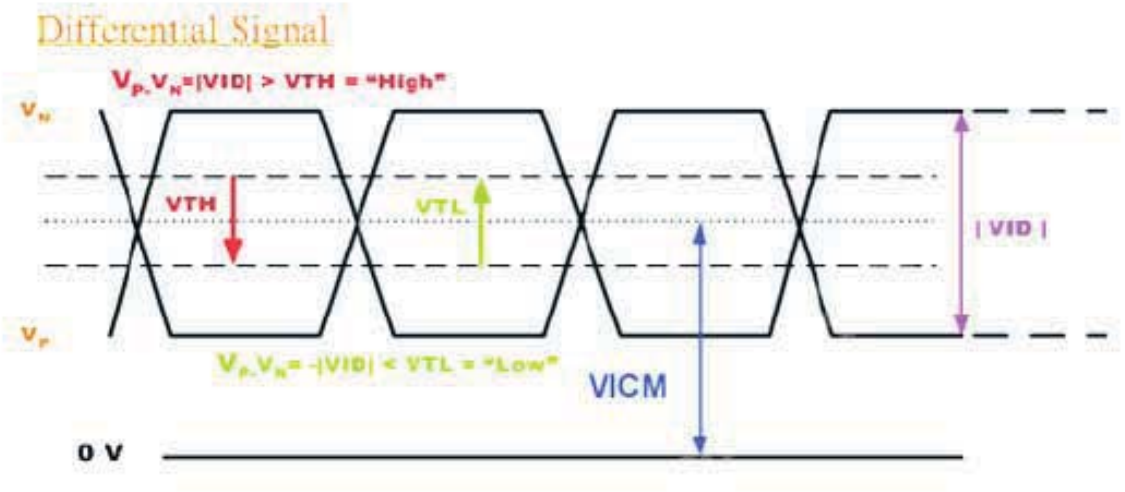

ICP Deutschland GmbH | +49(0)7121-14323-20 | sales@icp-deutschland.de | www.icp-deutschland.de

5.2 Backlight Unit

5.2.1 Parameter guideline for LED backlight

Following characteristics are measured under a stable condition using an inverter at 250C (Room Temperature):

Symbol	Parameter	Min.	Typ.	Max.	Unit	Remark
VCC	Input Voltage	10.8	12	12.6	[Volt]	
I_{VCC}	Input Current	-	0.17	-	[A]	100% PWM Duty
P_{VCC}	Power Consumption	-	2.04	2.14	[Watt]	100% PWM Duty
F_{PWM}	Dimming Frequency	200	-	20K	[Hz]	
	Swing Voltage	3	3.3	5.5	V	
	Dimming Duty Cycle	5	-	100	%	
I_F	LED Forward Current	-	50	52.5	mA	Ta = 25°C
V_F	LED Forward Voltage	-	21		Volt	I_F = 50mA, Ta = -30°C
			19.2	21.9	Volt	I_F = 50mA, Ta = 25°C
			18.3			I_F = 50mA, Ta = 85°C
P_{LED}	LED Power Consumption	-	1.92	-	Watt	I_F = 50mA, Ta = 25°C (total power)
Operation Lifetime		50,000			Hrs	I_F = 50mA, Ta = 25°C

Note 1: Ta means ambient temperature of TFT-LCD module.

Note 2: VCC, Ivcc, P_{VCC}, are defined for LED B/L.(100% duty of PWM dimming)

Note 3: I_F, V_F are defined for each channel of LED Light Bar. There are two LED channels (AN1-CA1-CA2) in back light unit.

Note 4: If G084SN05 V9 module is driven by high current or at high ambient temperature & humidity condition. The operating life will be reduced.

Note 5: Operating life means brightness goes down to 50% initial brightness. Minimum operating life time is estimated data.

ICP Deutschland GmbH | +49(0)7121-14323-20 | sales@icp-deutschland.de | www.icp-deutschland.de

6. Signal Characteristic

6.1 Pixel Format Image

Following figure shows the relationship between input signal and LCD pixel format.

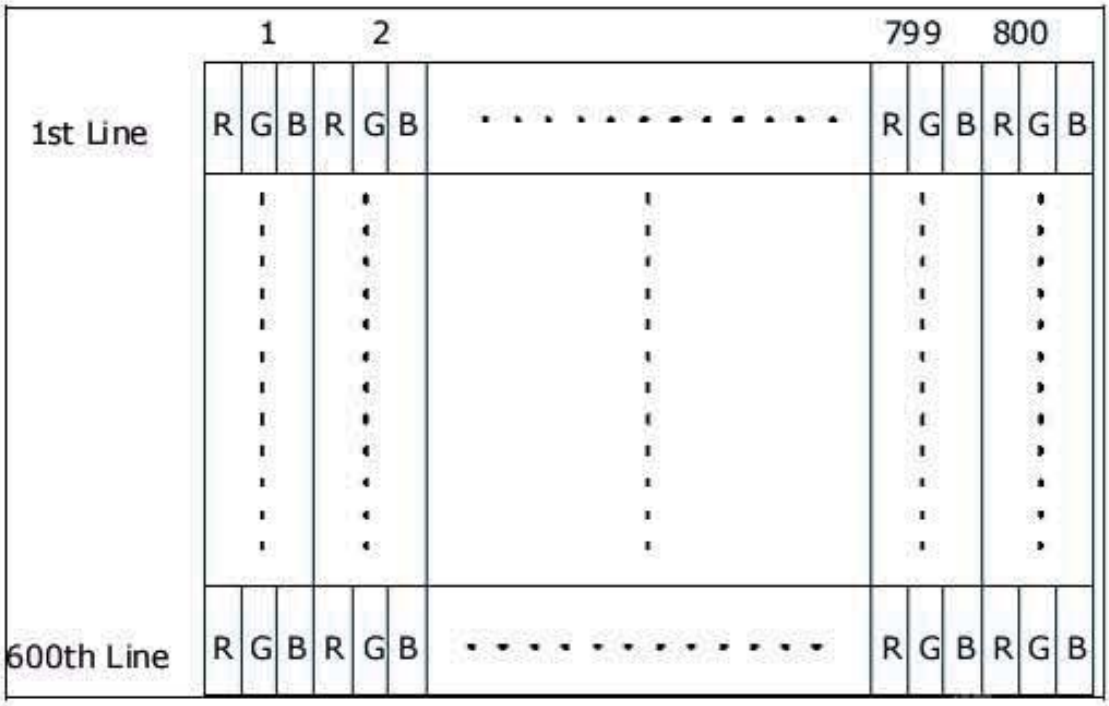

ICP Deutschland GmbH | +49(0)7121-14323-20 | sales@icp-deutschland.de | www.icp-deutschland.de

6.2 Signal Description

LVDS is a differential signal technology for LCD interface and high speed data transfer device. The connector pin definition is as below.

Pin No.	Symbol	Description
1	VDD	Power Supply, 3.3V (typical)
2	VDD	Power Supply, 3.3V (typical)
3	UD	Vertical Reverse Scan Control, When UD=Low or NC → Normal Mode. When UD=High → Vertical Reverse Scan. Note
4	LR	Horizontal Reverse Scan Control, When LR=Low or NC → Normal Mode. When LR=High → Horizontal Reverse Scan. Note
5	RxIN1-	LVDS differential data input Pair 0
6	RxIN1+	
7	GND	Ground
8	RxIN2-	LVDS differential data input Pair 1
9	RxIN2+	
10	GND	Ground
11	RxIN3-	LVDS differential data input Pair 2
12	RxIN3+	
13	GND	Ground
14	RxCLKIN-	LVDS differential Clock input Pair
15	RxCLKIN+	
16	GND	Ground
17	SEL 68	LVDS 6/8 bit select function control, Low or NC → 6 Bit Input Mode. High → 8 Bit Input Mode. Note
18	NC	NC
19	RxIN4-	LVDS differential data input Pair 3. Must be set to **NC** in 6 bit input mode.
20	RxIN4+	

Note : "Low" stands for 0V. "High" stands for 3.3V. "NC" stands for "No Connected."

ICP Deutschland GmbH | +49(0)7121-14323-20 | sales@icp-deutschland.de | www.icp-deutschland.de

6.3 Scanning Direction

The following figures show the image seen from the front view. The arrow indicates the direction of scan.

Fig. 1

Fig. 2

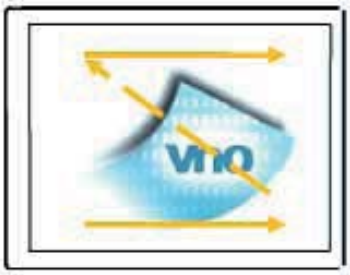

Fig. 3

Fig. 4

Fig. 1 Normal scan (Pin3, UD = Low or NC ; Pin4, RL = Low or NC)

Fig. 2 Reverse scan (Pin3, UD = Low or NC ; Pin4, RL = High)

Fig. 3 Reverse scan (Pin3, UD = High ; Pin4, RL = Low or NC)

Fig. 4 Reverse scan (Pin3, UD = High ; Pin4, RL = High)

ICP Deutschland GmbH | +49(0)7121-14323-20 | sales@icp-deutschland.de | www.icp-deutschland.de

6.4 The Input Data Format

6.4.1 SEL68

SEL68 = "Low" or "NC" for 6 bits LVDS Input

SEL68 = "High" for 8 bits LVDS Input

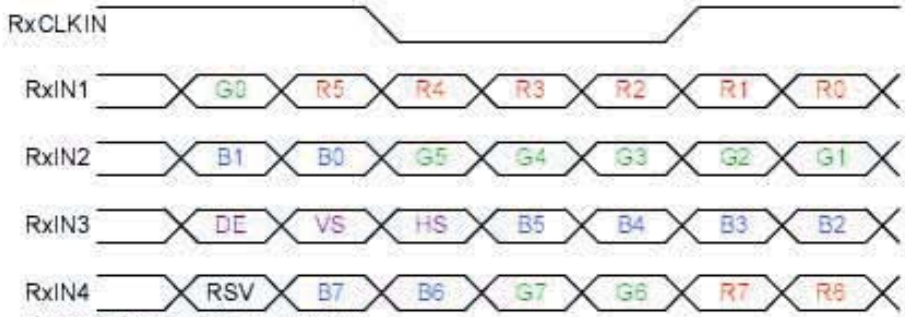

Note1: Please follow PSWG.

Note2: R/G/B data 7:MSB, R/G/B data 0:LSB

Signal Name	Description	Remark
R7 R6 R5 R4 R3 R2 R1 R0	Red Data 7 (MSB) Red Data 6 Red Data 5 Red Data 4 Red Data 3 Red Data 2 Red Data 1 Red Data 0 (LSB)	Red-pixel Data Each red pixel's brightness data consists of these 8 bits pixel data.
G7 G6 G5 G4 G3 G2 G1 G0	Green Data 7 (MSB) GreenData 6 GreenData 5 GreenData 4 GreenData 3 GreenData 2 GreenData 1 GreenData 0 (LSB)	Green-pixel Data Each green pixel's brightness data consists of these 8 bits pixel data.
B7 B6 B5 B4 B3 B2 B1 B0	Blue Data 7 (MSB) Blue Data 6 Blue Data 5 Blue Data 4 Blue Data 3 Blue Data 2 Blue Data 1 Blue Data 0 (LSB)	Blue-pixel Data Each blue pixel's brightness data consists of these 8 bits pixel data.
RxCLKIN+ RxCLKIN-	LVDS Clock Input	
DE	Display Enable	
VS	Vertical Sync	
HS	Horizontal Sync	

Note: Output signals from any system shall be low or Hi-Z state when VDD is off.

ICP Deutschland GmbH | +49(0)7121-14323-20 | sales@icp-deutschland.de | www.icp-deutschland.de

6.5 Interface Timing

6.5.1 Timing Characteristics

DE mode only

Parameter		Symbol	Min.	Typ.	Max.	Unit	Condition
Clock frequency		1/ T_{Clock}	33.6	39.8	48.3	MHz	
Vertical Section	Period	T_V	608	628	650	T_H	
	Active	T_{VD}	600	600	600		
	Blanking	T_{VB}	8	28	50		
Horizontal Section	Period	T_H	920	1056	1240	T_{Clock}	
	Active	T_{HD}	800	800	800		
	Blanking	T_{HB}	120	256	440		

Note: Frame rate is 60 Hz.
Note: DE mode.

6.5.2 Input Timing Diagram

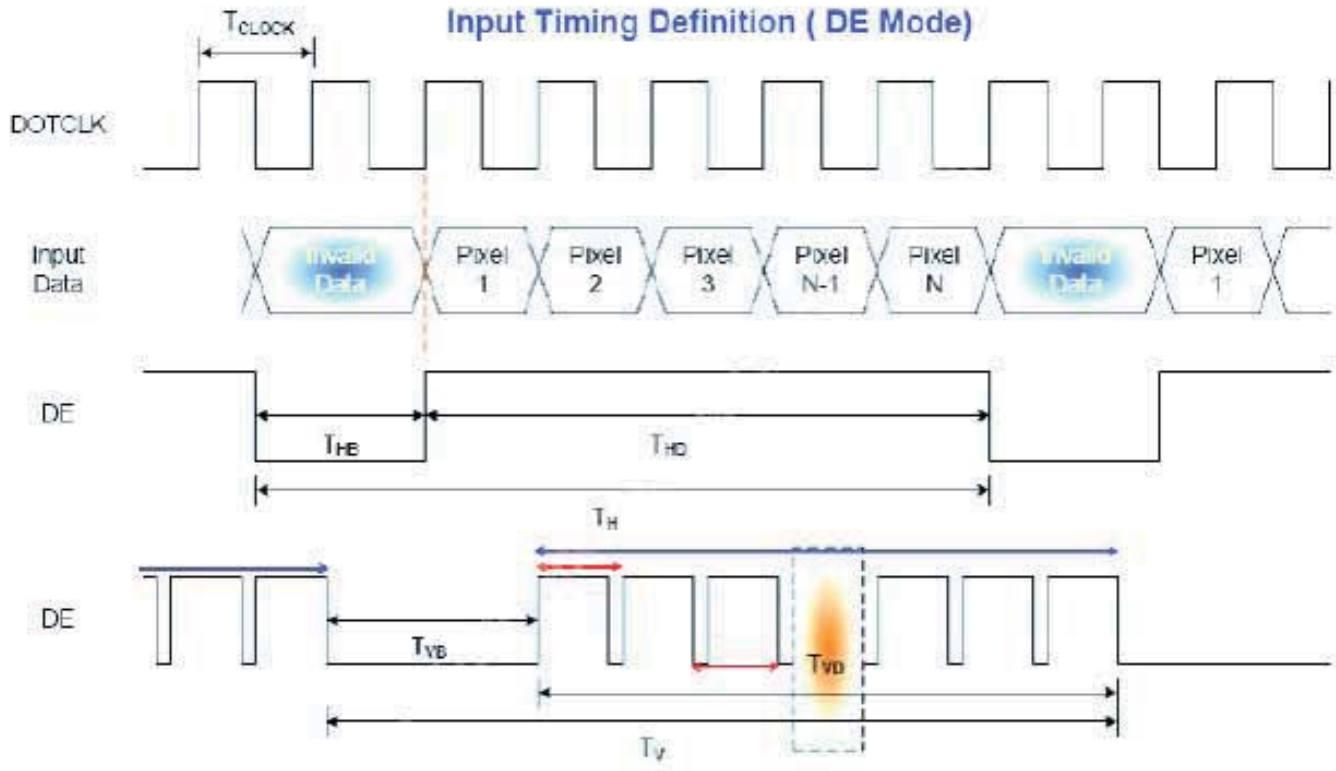

ICP Deutschland GmbH | +49(0)7121-14323-20 | sales@icp-deutschland.de | www.icp-deutschland.de

6.6 Power ON/OFF Sequence

VDD power and BackLight on/off sequence is as below. Interface signals are also shown in the chart. Signals from any system shall be Hi-Z state or low level when VDD is off.

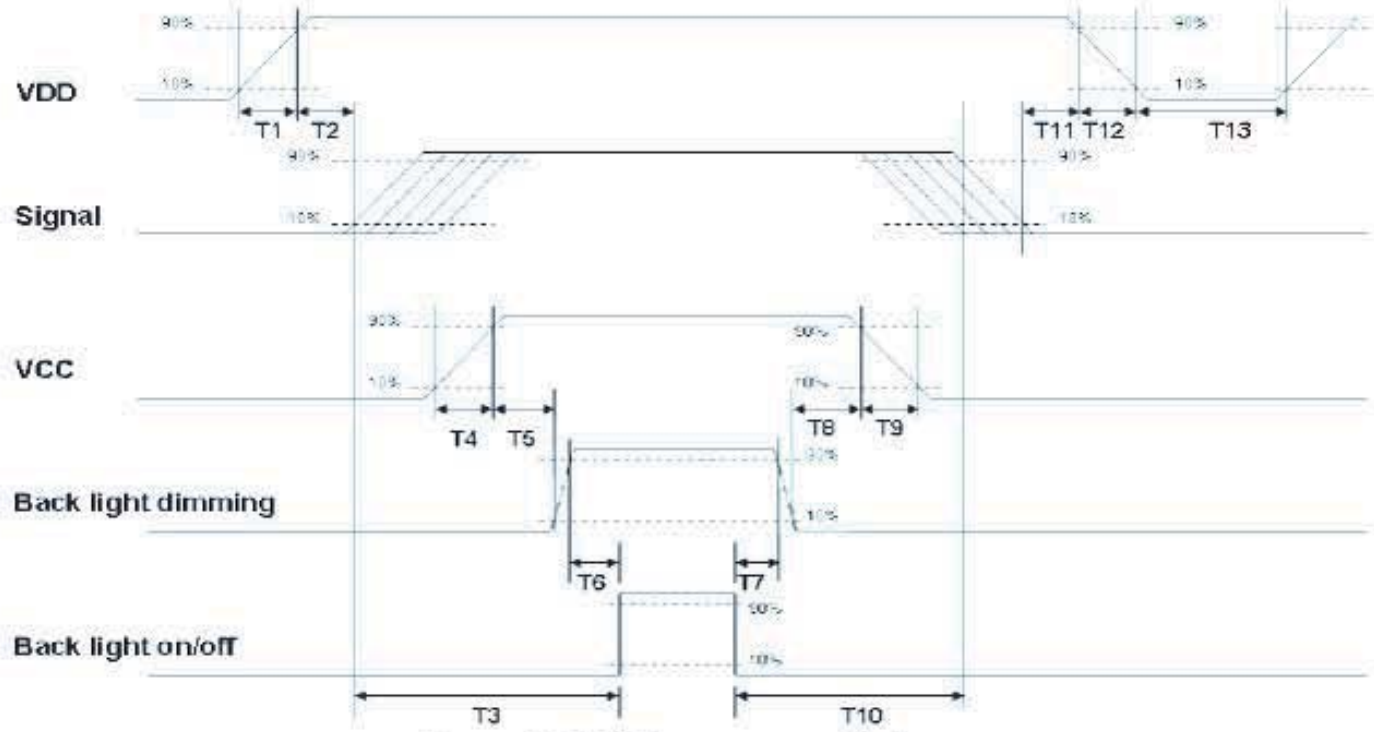

Power ON/OFF sequence timing

Parameter	Value			Units
	Min.	Typ.	Max.	
T1	0.5	--	10	[ms]
T2	30	40	50	[ms]
T3	200	--	--	[ms]
T4	0.5	--	10	[ms]
T5	10	--	--	[ms]
T6	10	--	--	[ms]
T7	0	--	--	[ms]
T8	10	--	--	[ms]
T9	--	--	10	[ms]
T10	110	--	--	[ms]
T11	0	16	50	[ms]
T12	--	--	10	[ms]
T13	1000	--	--	[ms]

The above on/off sequence should be applied to avoid abnormal function in the display. Please make sure to turn off the power when you plug the cable into the input connector or pull the cable out of the connector.

ICP Deutschland GmbH | +49(0)7121-14323-20 | sales@icp-deutschland.de | www.icp-deutschland.de

ICP Deutschland GmbH | +49(0)7121-14323-20 | sales@icp-deutschland.de | www.icp-deutschland.de

7. Connector & Pin Assignment

Physical interface is described as for the connector on module. These connectors are capable of accommodating the following signals and will be following components.

7.1 TFT LCD Signal (CN1): LVDS Connector

Connector Name / Designation	Signal Connector
Manufacturer	STM, Hirose or compatible
Connector Model Number	STM -MSB24013P20HA, Hirose- DF19LA-20P-1H or compatible
Mating Model Number	STM-P24013P20, Hirose-DF19-20S-1C or compatible

Pin No.	Signal Name	Pin No.	Signal Name
1	VDD	2	VDD
3	UD	4	LR
5	RxIN1-	6	RxIN1+
7	GND	8	RxIN2-
9	RxIN2+	10	GND
11	RxIN3-	12	RxIN3+
13	GND	14	RxCKIN-
15	RxCKIN+	16	GND
17	SEL 68	18	NC
19	RxIN4-	20	RxIN4+

7.2 LED Backlight Unit (CN2): LED Driver Connector

Connector Name / Designation	LED Connector
Manufacturer	ENTERY
Connector Model Number	ENTERY 3808K-F04N-02R or compatible
Mating Model Number	ENTERY H208K-P04N-02B or compatible.

Pin #	Symbol	Pin Description
1	VCC	12V input
2	GND	GND
3	Display_ON/OFF	+5.0V or +3.3 V:ON, 0V:OFF
4	Dimming	PWM

ICP Deutschland GmbH | +49(0)7121-14323-20 | sales@icp-deutschland.de | www.icp-deutschland.de

7.3 LED Light Bar Input Connector (CN3):

Manufacturer	ENTERY
Connector Model Number	ENTERY 3800K-F03N-03 or compatible
Mating Connecter Model Number	ENTERY H203K-D03N-04B or compatible

Pin #	Symbol	Pin Description
1	AN1	LED anode
2	CA1	LED cathode
3	CA2	LED cathode

Pin #	Symbol	Cable color
1	AN1	Red
2	CA1	Black
3	CA2	Black

8. Reliability Test Criteria

Items	Required Condition	Note
Temperature Humidity Bias	40^{0}C/90%,300 hours	
High Temperature Operation	85^{0}C,300 hours	
Low Temperature Operation	-30^{0}C,300 hours	
Hot Storage	85^{0}C,300 hours	
Cold Storage	-30^{0}C,300 hours	
Thermal Shock Test	-20^{0}C/30 min ,600C/30 min ,100cycles	
Shock Test (Non-Operating)	50G,20ms,Half-sine wave,(±X, ±Y, ±Z)	
Vibration Test (Non-Operating)	1.5G, (10~200Hz, P-P) 30 mins/axis (X, Y, Z)	
On/off test	On/10 sec, Off/10 sec, 30,000 cycles	
ESD	Contact Discharge: ± 8KV, 150pF(330Ω) 1sec, 8 points, 25 times/ point Air Discharge: ± 15KV, 150pF(330Ω) 1sec, 8 points, 25 times/ point	Note 1

Note1: According to EN61000-4-2, ESD class B: Some performance degradation allowed. No data lost

. Self-recoverable. No hardware failures.

ICP Deutschland GmbH | +49(0)7121-14323-20 | sales@icp-deutschland.de | www.icp-deutschland.de

9. Mechanical Characteristics

9.1 LCM Front View

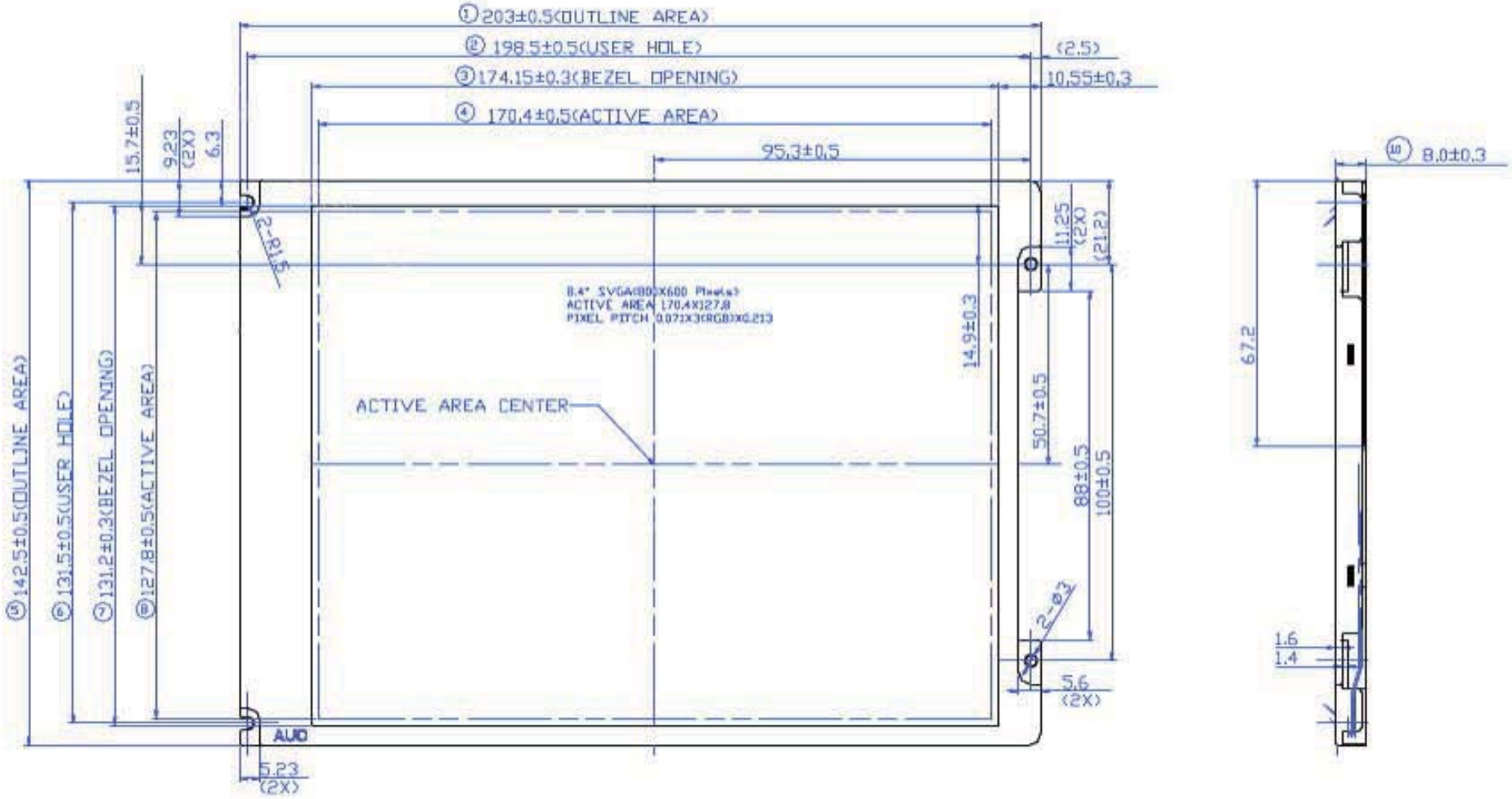

ICP Deutschland GmbH | +49(0)7121-14323-20 | sales@icp-deutschland.de | www.icp-deutschland.de

9.2 LCM Rear View

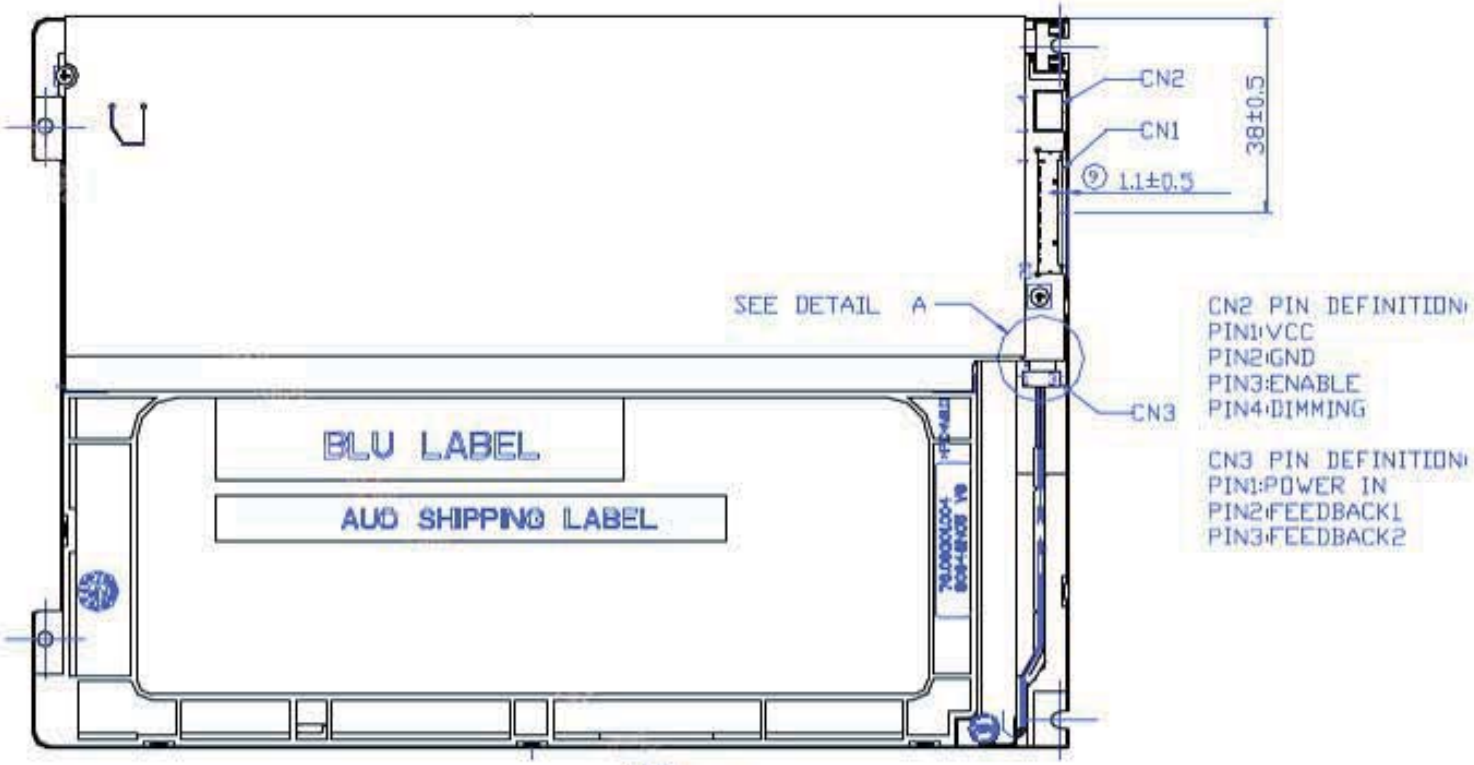

NOTE:
1.CONNECTOR:
CN1:STM MSB24013P20HA
MATING CONNECTOR:
STM P24013P20
CN2:ENTERY 3808K-F04N-02R
MATING CONNECTOR:
ENTERY H208K-P04N-02B
CN3:ENTERY H203K-D03N-04B
MATING CONNECTOR:
ENTERY 3800K-F03N-03R
2.GENERAL TOLERANCE: LEVEL 3
3.CHECK CODE FROM ⓘ TO ⓔ

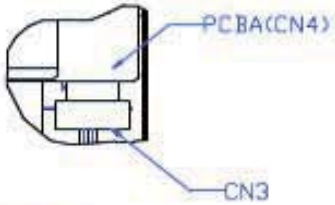

DETAIL A
SCALE 2.000

Reminding to check screw's torque value before fastening panel.

ICP Deutschland GmbH | +49(0)7121-14323-20 | sales@icp-deutschland.de | www.icp-deutschland.de

10. Label and Packaging

10.1 Shipping Label (on the rear side of TFT-LCD display)

10.2 Carton Package

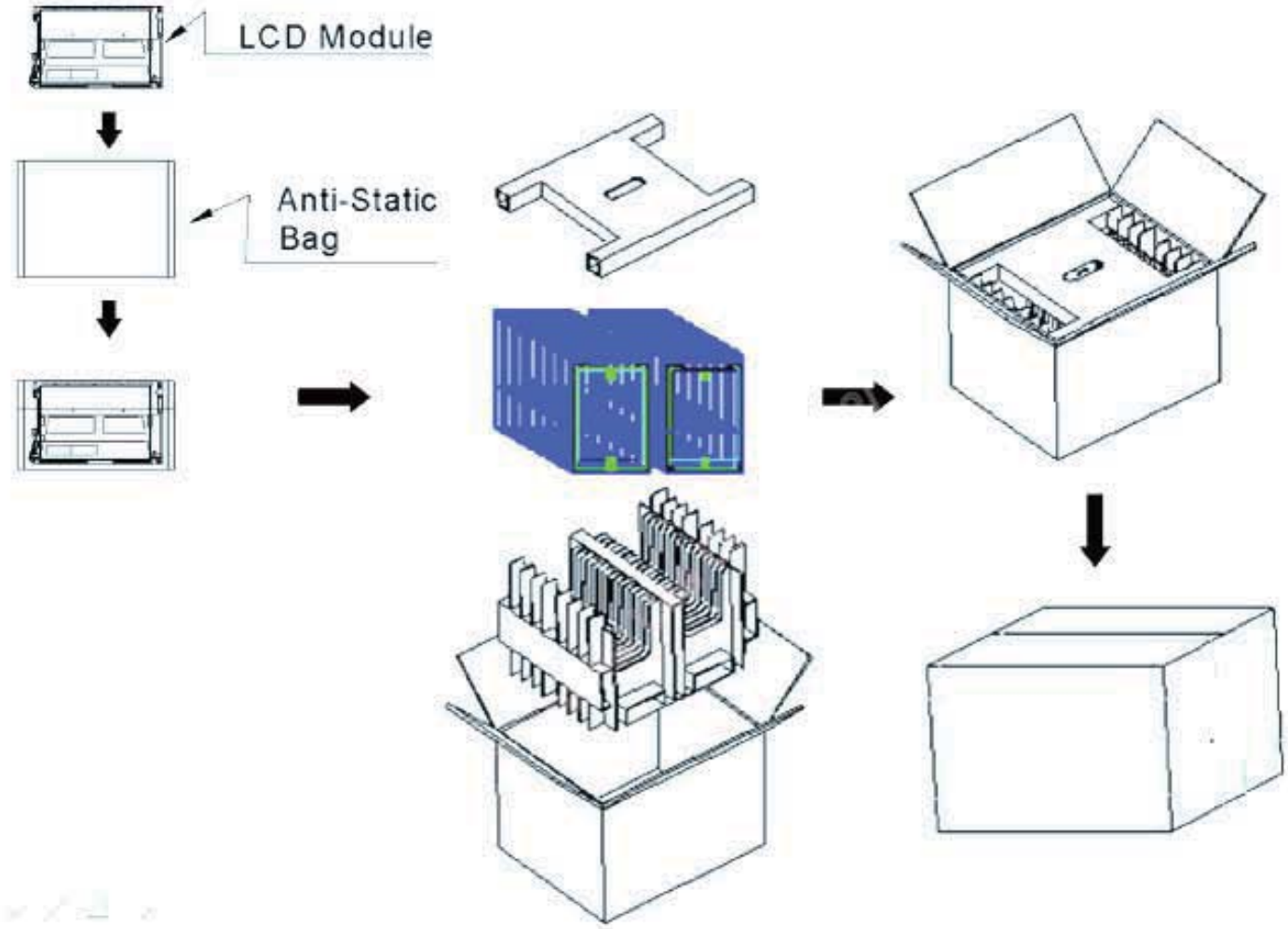

Note:
1. Max. Capacity: 30pcs LCD Modules / per carton
2. Max. Weight: 12 kg / per carton
3. The outside dimension of carton is 405(L) mm x 328(W) mm x 301(H) mm

ICP Deutschland GmbH | +49(0)7121-14323-20 | sales@icp-deutschland.de | www.icp-deutschland.de

11 Safety

11.1 Sharp Edge Requirements

There will be no sharp edges or corners on the display assembly that could cause injury.

11.2 Materials

11.2.1 Toxicity

There will be no carcinogenic materials used anywhere in the display module. If toxic materials are used, they will be reviewed and approved by the responsible AUO toxicologist.

11.2.2 Flammability

All components including electrical components that do not meet the flammability grade UL94-V1 in the module will complete the flammability rating exception approval process.

The pRxINted circuit board will be made from material rated 94-V1 or better. The actual UL flammability rating will be pRxINted on the pRxINted circuit board.

11.3 Capacitors

If any polarized capacitors are used in the display assembly, provisions will be made to keep them from being inserted backwards.

11.4 National Test Lab Requirement

The display module will satisfy all requirements for compliance to:

UL 1950, First Edition	U.S.A. Information Technology Equipment

ICP Deutschland GmbH | +49(0)7121-14323-20 | sales@icp-deutschland.de | www.icp-deutschland.de

Specification

Of

Touch 10084002 V01

1. General

1.1 This document is included the specifications of touch screen.
1.2 This touch screen is 5 wires analog resistive type.
1.3 It is designed to be activated by pressure of finger or stylus.

2. Environmental Specifications

2.1 Storing Environment
Temperature Range：- 20℃ ～ 70℃
Humidity Range：20% RH ～ 90% RH (Non Condensing)

2.2 Operating Environment
Temperature Range： -10℃ ～60℃
Humidity Range：20% RH ～80% RH (Non Condensing)

2.3 The above envionment is under normal pressure of the atmosphere.

3. Mechanical Specifications

3.1 Touch panel style

style : Analog resistance

3.2 Dimension Specifications:

Dimension outline	196.09 x 149.86 mm ± 0.30mm
Viewable area	174.60 x 132.00 mm ± 0.20mm
Active area	171.40 x 128.80 mm ± 0.20mm
Total thickness	2.20 mm ± 0.20mm
Tail length	155.00 mm ± 6.00mm

3.3 Operating Force ≦ 80g (R0.8 Touch Pen)

3.4 Surface Hardness ≧ 3H (ASTM D3363, pressure 750g/45°)

3.5 Static Load : 5 kg within 10cm² area for 30sec

3.6 Impact : Impact at center area one time , no damage (25.0ψDIA. Steel Ball/67g , Height=50cm)

3.7 Bending : 90° 10 times left & right

3.8 Peeling : 800g by vertical 90°

4. Optical Specifications

4.1 Transparency ： 80 ±3% (BYK Gardner , 550nm , ASTM D1003)

4.2 Haze：8 ±3%(BYK Gardner , ASTM D1003)

5. Electrical Specifications

5.1 Loop resistance X:20Ω ～ 500Ω , Y:20Ω ～ 500Ω

5.2 Voltage endurance DC 50V/60sec.

5.3 Linearity deviation X≦ 1.5% ，Y≦ 1.5%

5.4 Insulation resistance ≧ 20MΩ/25V DC

5.5 Chattering ≦10ms

6. Appearance Inspection

6.1 The inspection shall be performed by using one 17w fluorescent lamp as back or side light . The panel shall be placed at 30cm away from eyes. (Figure1.1 and Figure1.2)

.

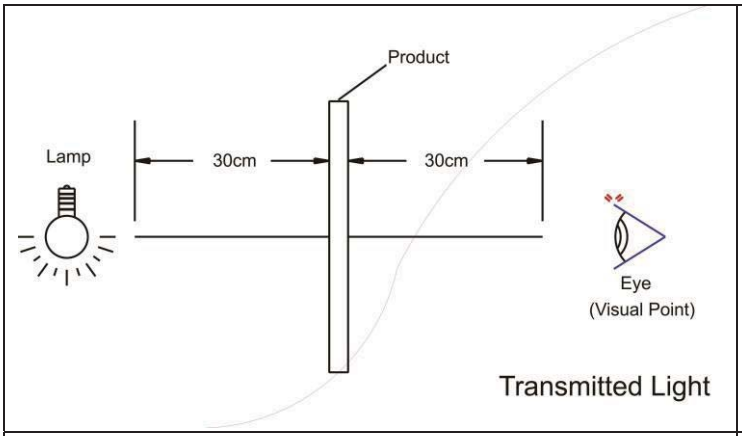

Figure 1.1

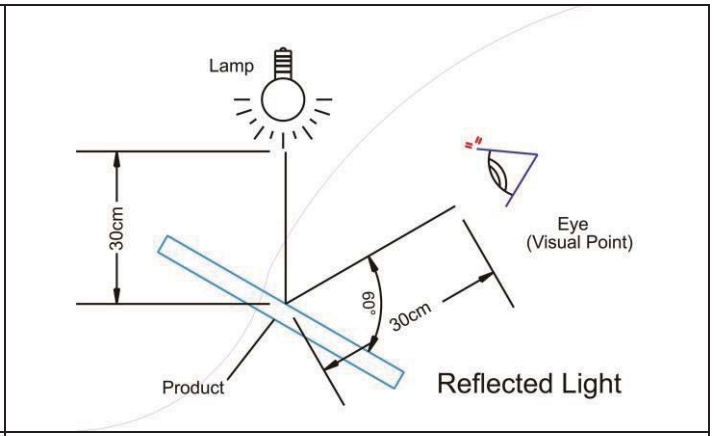

Figure 1.2

6.2 The flaws and Impurities are allowed outside viewing area except those affecting electrical functions.

Inside the viewing area , it meets the following :

(1) Linear Object :

W ≦ 0.05 mm OK

0.05 mm < W ≦ 0.1 mm and L≦20, total≦5 OK

W > 0.1 mm No good

(W : width of flaws , L : length of flaws)

(2) Dot-shaped Impurities :

D ≦ 0.4 mm OK

0.4 mm < D ≦ 0.6 mm , each area contains≦3, total≦6 OK

D > 0.6 mm No good

(D : average of diameter , Each area contains=20 ϕ)

(3) Scratch：

W ≦ 0.04 OK

0.04 mm < W ≦ 0.06 mm and L ≦ 12 mm , total≦7 OK

0.07 mm < W ≦ 0.1 mm and L ≦ 6 mm , total≦6 OK

W > 0.1 mm ，No good

(W : width of scratch , L : length of scratch)

Glass Flaw

(1) Progressive Flaw : No good (Figure2.1)

(2) corner chips : X ≦ 3 mm , Y ≦ 3 mm , Z ≦ T (Figure2.2)

(3) border chips : X ≦ 10 mm , Y ≦ 3 mm , Z ≦ T (Figure2.3)

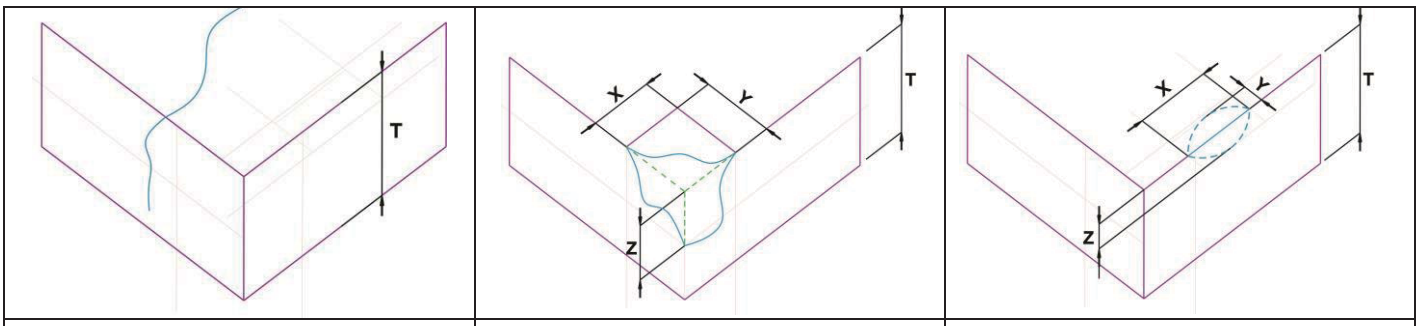

Figure 2.1	Figure 2.2	Figure 2.3

X : Width direction against the edge line.
Y : Length direction against the edge line.
Z : Thickness direction against the edge line.

The chips are not supposed to affect any of the electrical functions.

7. Durability

Knock test : 10,000,000 times keystrokes

They still meet the specification required in section 5.1 and 5.4 , and section 5.3 satisfies X≦2.5%, Y≦2.5% ; Operating force must not exceed 250g after reliability test

8. Reliability

8.1 High temperature test
After putting panels at 70℃ for 240 hours and allow panels stay in normal environment for 4 hours , they still meet the specification required in section 5.1 and 5.4 , and section 5.3 satisfies X≦2.5%, Y≦2.5% ; Operating force must not exceed 250g after reliability test

8.2 Low temperature test
After putting panels at -20℃ for 240 hours and allow panels stay in normal environment for 4 hours , they still meet the specification required in section 5.1 and 5.4 , and section 5.3 satisfies X≦2.5%, Y≦2.5% ; Operating force must not exceed 250g after reliability test

8.3 High temperature and high humidity test
After putting panels at 60℃ , 90% RH for 240 hours and allow panels stay in normal environment for 4 hours , they still meet the specification required in section 5.1 and 5.4 , and section 5.3 satisfies X≦2.5%, Y≦2.5% ; Operating force must not exceed 250g after reliability test

8.4 Thermal shock test
1 Cycle : -20℃ →70℃ (60 minutes period)
After putting panels for 50 cycles and allow panels stay in normal environment for 4 hours , they still meet the specification required in section 5.1 and 5.4 , and section 5.3 satisfies X≦2.5%, Y≦2.5% ; Operating force must not exceed 250g after reliability test

8.5 All the above tests may cause the film puffed .

9. Inspection Method

9.1 Linearity

(1) Short UR and LR(or short LR and LL).
(2) apply voltage DC 5V.
(3) short UL and LL (or short UR and UL).
(4) apply grounding.
(5) draw points along Lx and Ly at 5.0mm intervals within pattern area and detect the voltage at SG.
(6) measure the voltage differences between UR and UL(or UR and LR)

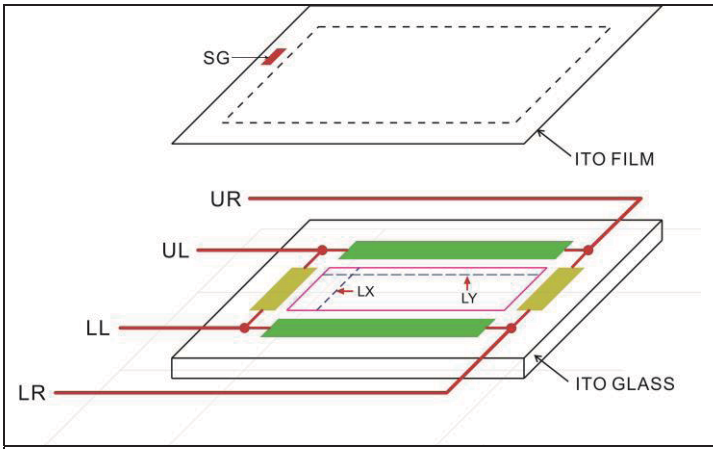

Figure 3.1

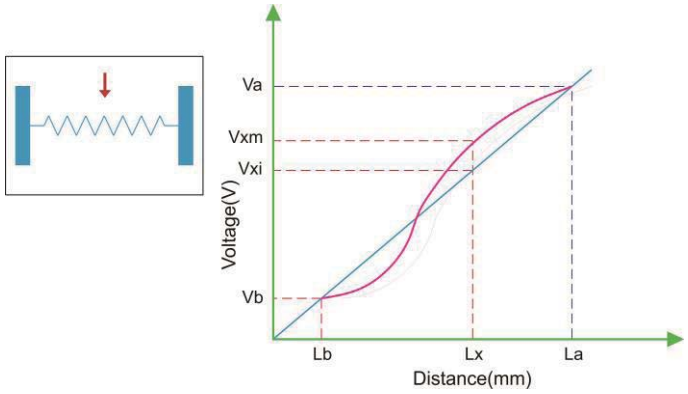

Figure 3.2

9.2 Specification

Linearity must meet the electrical characteristic specified in section 5.3

10. Warranty

Miracletouch provide two years warranty of Miracletouch products.

The followings are not in guaranty:

(1) Damages caused by improper handling from clients, including shipping, installation and integration.
(2) Damage caused by self-repairs, modifications or disassembling of the product.
(3) Damages caused by disasters, either by natural causes or human factors, after the delivery of products

11.Cautions

11.1 The bezel which contacts with PET film should keep a distance at least 3 mm from the active area to avoid short.

11.2 The bezel which contacts with PET film should not place heavy pressure on the film and the surface of bezel should be kept smooth.

11.3 Please keep clean on the surface of PET film , Don't attach any tape on that.

11.4 Neither pull tail upward nor push downward with an angle of 90° It should keep an arch at least R5.

11.5 If there exist any high voltage power , please make an adequate protect.

11.6 To avoid the high voltage static power to damage panel , please don't operate touch panel without connecting controller.

11.7 The panel could be cleaned with cloth containing ethanol or neutral cleaner. It is no effects to the characteristics

11.8 Miracletouch retain the right of changing the materials with same grade and specification.

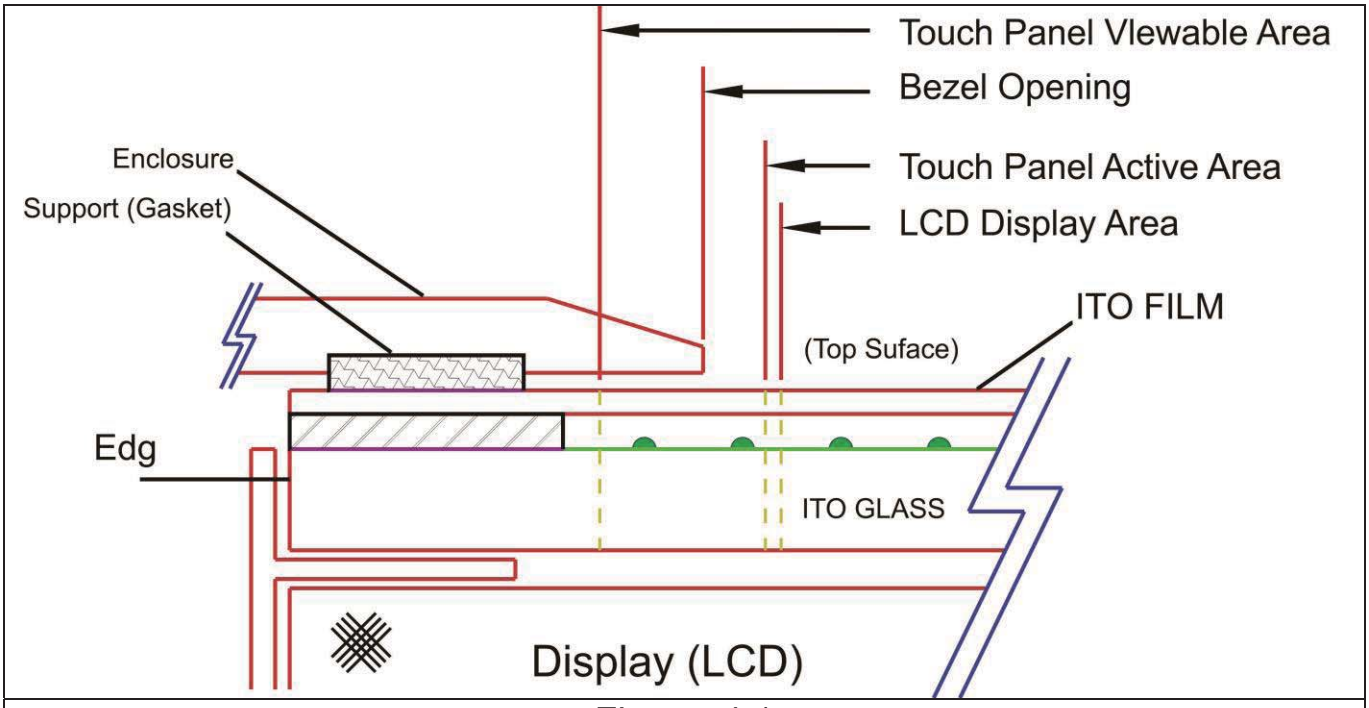

Figure 4.1

Connector Pinout	
Pin NO.	Designation
1	UR
2	LR
3	SG
4	UL
5	LL

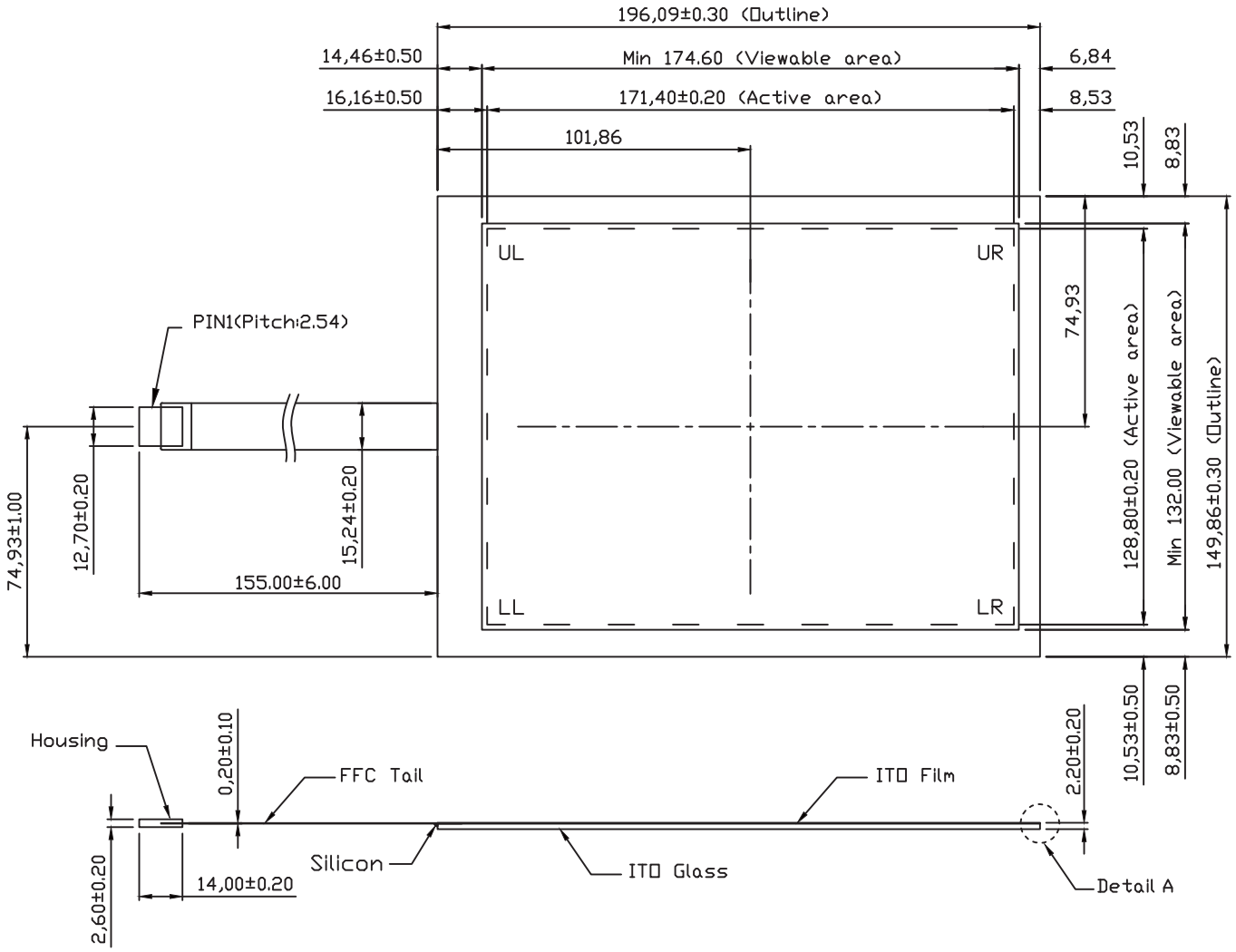

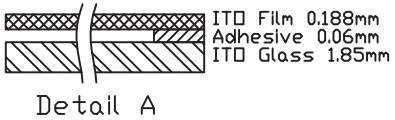

Detail A

			REV	DATE	DESIGN	DATE	APPROVED
			01	2013.05.15	Eric	2013.05.15	Eric
THIRD ANGLE	MODEL	8.4" 5W Touch Panel					
	DRAWING NO.	10084002					

ICP Deutschland GmbH | +49(0)7121-14323-20 | sales@icp-deutschland.de | www.icp-deutschland.de

Specification

Of

Touch Controller Board CAB-MB-MER4050UEBG-02

CAB-MB-MER4050UEBG-02

5-Wire USB
Touch Panel Controller

This touch control board provides an optimised performance for 5wire analog resistive touch panels. It is sensitive, accurate and come with a user-friendly touch panel driver that emulates mouse left and right button function.

The controller has met latest Restriction of Hazardous Substances (RoHS) Directive, it communicates with host system through USB or RS232 interface, supporting operation systems are as followed list.

OS	Version	Interfaces
Windows	Windows 7 Windows Vista, XP/2000, 9x/ME Windows CE 2.12/3.0/.net(4.0/5.0)/6.0/7.0 Windows Embedded Windows XP Tablet PC edition	RS232 USB PS2
Windows	Windows NT4	RS232 PS2
Linux	*The new Linux driver supports most of the Linux distribution on 32/64 bit versions, including Kernel 2.4.x/2.6.x/3.X with XFree86 4.X / Xorg 6.7 to 7.7 (Up to X server 1.11.x)* CentOS, Debian, Fedora, Gentoo, Mandrake (Mandriva), Red Hat, Slackware, SuSE (OpenSuSE), Ubuntu (Xubuntu), Yellow Dog, and Meego etc.	RS232 USB PS2
Android	1.6 Donut to 4.0.x Ice Cream Sandwich *(Support X86 and ARM platform)*	RS232 USB I2C
DOS	DOS 6.22	RS232 PS2
Mac	Mac OS 9,X Mac OS X	USB
QNX	QNX Neutrino RTOS v6.3	RS232

CAB-MB-MER4050UEBG-02

Controller:

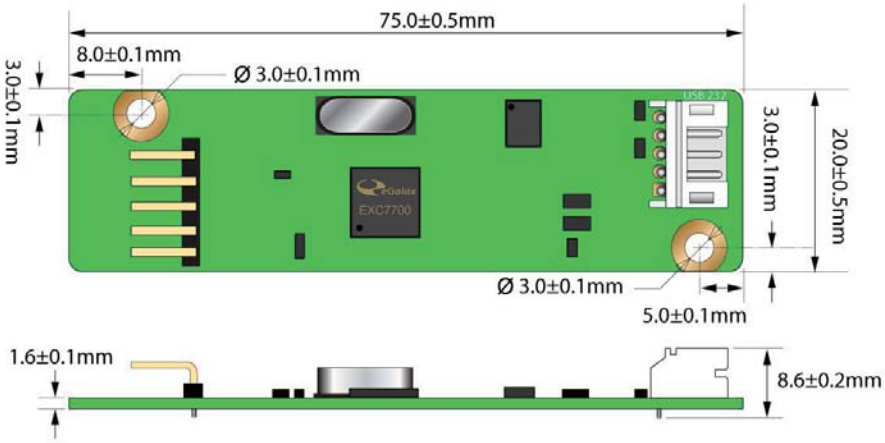

Specifications:

5wire Type Controller	
Circuit Board Dimension	20mm x 75mm (0.79inches x 2.95inches)
Power Requirements	D.C.+5V (100mA typical,50mV peak to peak maximum ripple and noise)
Operating Temperature	-25 to 85 ℃
Storage Temperature	-25 to 85 ℃
Relative Humidity	95% at 60 ℃, RH Non-condensing
Interface	USB: 1.1 Full Speed
Resolution	2048×2048
Report rate	USB: Max. 200 points/sec
Response time	Max. 20 ms
Attached Cable	USB: 180cm shielded cable with USB-A onnector
Regulatory Approvals	FCC-B , CE
EMI	Unaffected by environmental EMI
Panel resistance	5 wire resistive model: 50 ~ 200 ohm (Pin to pin on same layer, Touch Resistance under 3k ohm)
Green Product	RoHS Compliant
MTBF	200,000 hrs

CAB-MB-MER4050UEBG-02 Full Package includes:

(1) CAB-MB-MER4050UEBG (5 wire control board)

(2) CAB-CB-SXU00 (USB cable)

(3) CAB-CB-5XN00 (5 pin Flat cable)

CAB-MB-MER4050UEBG-02

For 5-Wire Resistive Touch Panel

Controller Panel Pin Assignment:

ELO TYPE Pin-Out

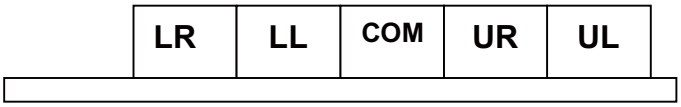

ELO PIN-OUT

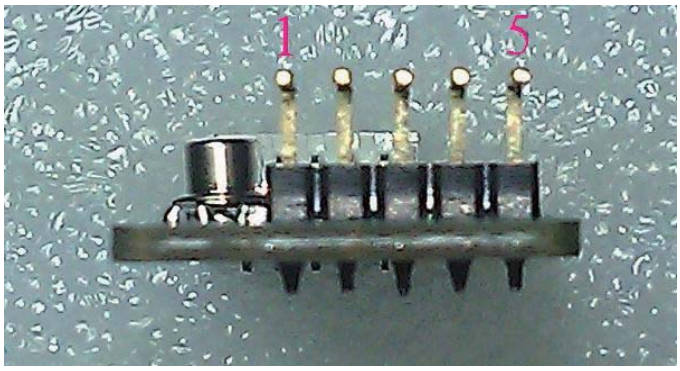

Controller Wafer Pin Assignment:

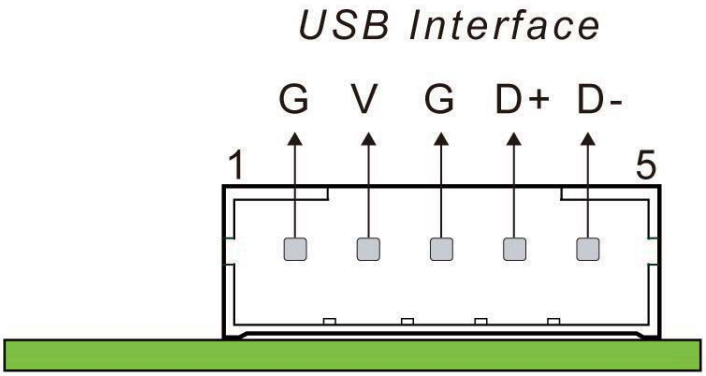

Rev V1.01

Specification

Of

A/D Board Kit CAB-F2281L-01 (VGA/DVI)

1. General Description

1.1 Introduction

The CAB-F2281L is highly integrated TFT flat panel interface board that allows connect analog, 15 pin RGB source with TFT panels. From a single 12 V power supply, the CAB-F2281L generates all the voltages required by the TFT panel and includes the power sequencing features. The CAB-F2281L is capable of displaying FULL HD and lower resolutions. Synchronization signals of applicable resolution modes can be detected automatically.

1.2 Technical Information Summary

Analog RGB Input port

- **Support up to 1920 X 1080**
- **Support for Sync-on-Green (SOG)**

DVI Compliant Digital Input

- **Single link on chip TMDS receiver**
- **Long cable support to 1.65Ghz**

Scaling

- **Support non-liner scaling from 4:3 to 16:9 or 16:9 to 4:3**

Audio: 2W x 2

OSD key: Up to 7 KEY.

1.2 Power consumption

Panel: AU 19”

DC IN: 12V

Inverter: 4 Lamp

Resolution: 1280 X 1024 75Hz

Condition	Audio minimum	Audio maximum
A/D Board only	3W	
A/D Board + Panel + Inverter	26W	28W
Power saving	0.4W	

2. Dimension & Pin definition

Dimension: 130mm (L) *51 mm (W)* 14.2mm(H)

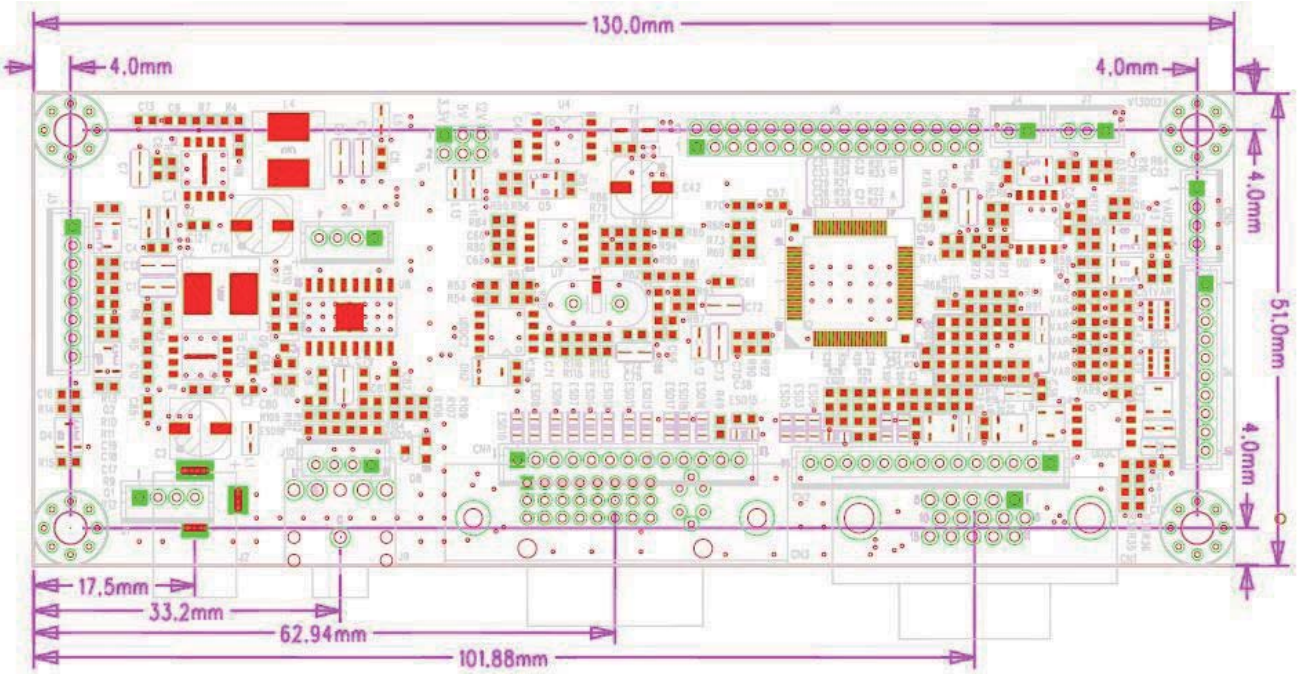

2.1 PIN Define

Item	SPECIFICATION	Description
LVDS Output	32 PIN	J5
VGA	14 PIN	CN2
DVI	13 PIN	CN4
OSD KEY	10 PIN	J6
Inverter	5 PIN	J3
Speaker Out	4 PIN	J8
Audio In	4 PIN	J10
POWER	4 PIN	J1

LVDS OUT (J5)

PIN	FUNCTION	PIN	FUNCTION
1	VCC	2	VCC
3	RXO0-	4	RXO0+
5	RXO1-	6	RXO1+
7	RXO2-	8	RXO2+
9	GND	10	GND
11	RXOC-	12	RXOC+
13	RXO3-	14	RXO3+
15	GND	16	GND
17	RXE0-	18	RXE0+
19	RXE1-	20	RXE1+
21	RXE2-	22	RXE2+
23	GND	24	GND
25	RXEC-	26	RXEC+
27	RXE3-	28	RXE3+
29	GND	30	GND
31	NC	32	NC

OSD KEY : **J6 WAFER 10 pin 2.0mm**

PIN	FUNCTION	PIN	FUNCTION
1	GREEN-LED	2	GND
3	RED-LED	4	POWER-KEY
5	MENU-KEY	6	AUTO-KEY
7	RIGHT-KEY	8	LEFT-KEY
9	UP-KEY	10	DOWN-KEY

INVERTER

J3 WAFER 5pin 2.0mm

PIN	Function	PIN	Function
1	+12V	2	GND
3	Brightness	4	GND
5	ON/OFF		-

Speaker out: J8 WAFER 4pin 2.0mm

PIN	FUNCTION	PIN	FUNCTION
1	**AUDIO LOUT**	**2**	**GND**
3	**AUDIO ROUT**	**4**	**GND**

Power in: J1 WAFER 4pin 2.0mm

PIN	FUNCTION	PIN	FUNCTION
1	**+12V**	**2**	**+12V**
3	**GND**	**4**	**GND**

3. Applicable Timing

Resolution	Refresh Rate	Horizontal Frequency	Pixel Frequency	Standard Type	Remarks
640 x 400	70 Hz	31.46 KHz		VESA Standard	
720 x 400	70 Hz	31.46 KHz		VESA Standard	
640 x 480	60 Hz	31.50 KHz	25.175 MHz	Industrial Standard	
	72 Hz	37.90 KHz	31.500 MHz	VESA Standard	
	75 Hz	37.50 KHz	31.500 MHz	VESA Standard	
800 x 600	60 Hz	37.9 KHz	40.000 MHz	VESA Guideline	
	72 Hz	48.10 KHz	50.000 MHz	VESA Standard	
	75 Hz	46.90 KHz	49.500 MHz	VESA Standard	
1024 x 768	60 Hz	48.40 KHz	65.000 MHz	VESA Guideline	
	70 Hz	56.5 KHz	75.000 MHz	VESA Standard	
	75 Hz	60.00 KHz	78.750 MHz	VESA Standard	
1280 x 1024	60 Hz	64.00 KHz	108.000 MHz		
	75 Hz	80.00 KHz	135.000 MHz		
1360 x 768	60Hz	47.70KHz	85.500MHz		
1440 x 900	60Hz	59.9KHz	106.500MHz		
	75Hz	75.0KHz	136.750MHz		
1600 X 1200	60Hz	75.0KHz	162.000MHz		
	75Hz	93.8KHz	202.500MHz		
1680 X 1050	60Hz	64.7KHz	119.000MHz		
	75Hz	74.9KHz	187.000MHz		
1920 X 1080	60Hz	59.9KHz	106.500MHz		

4. LCD OSD Setting

4.1 OSD Control Button

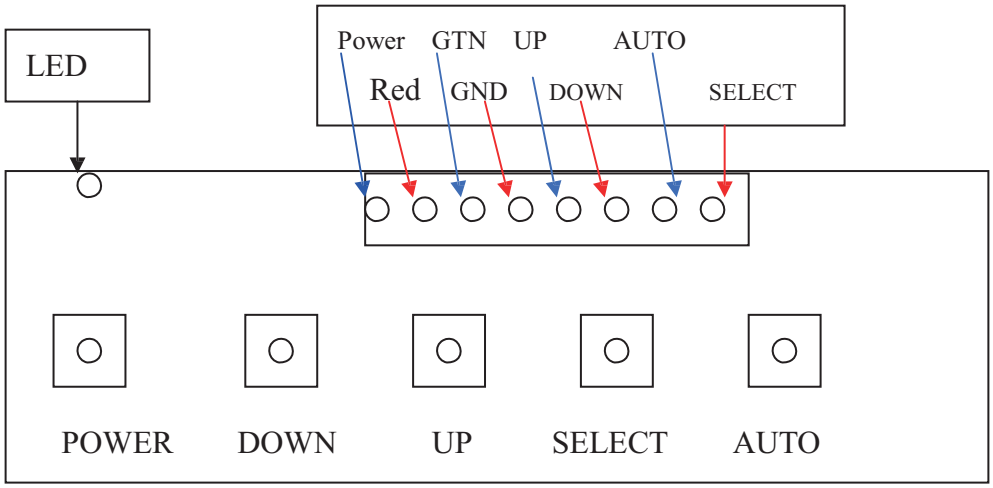

Down / Left (◀): Decrease setting or scroll down the menu bar
Up / Right (▶): increase setting or scroll up the menu bar
SELECT (MENU): Activate OSD menu
Power: Turn on or off the main board

4.2 OSD (On Screen Display)

4.2-1

Picture

4.2-2

Display

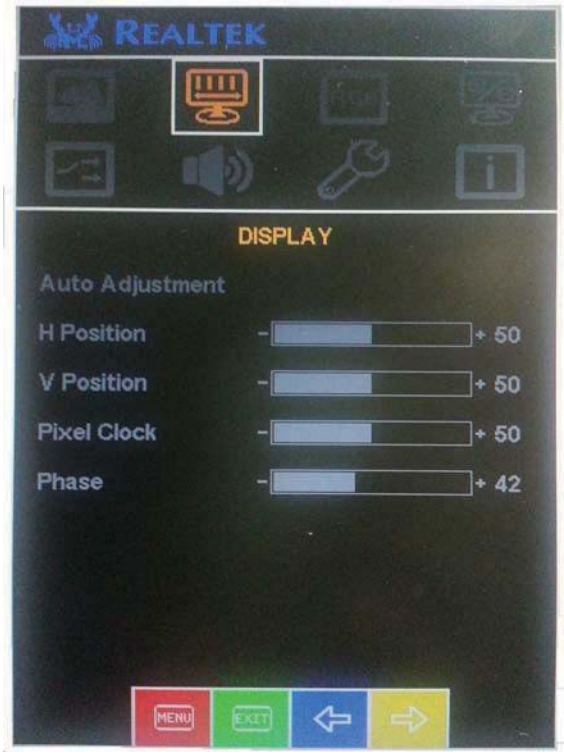

4.2-3

Color

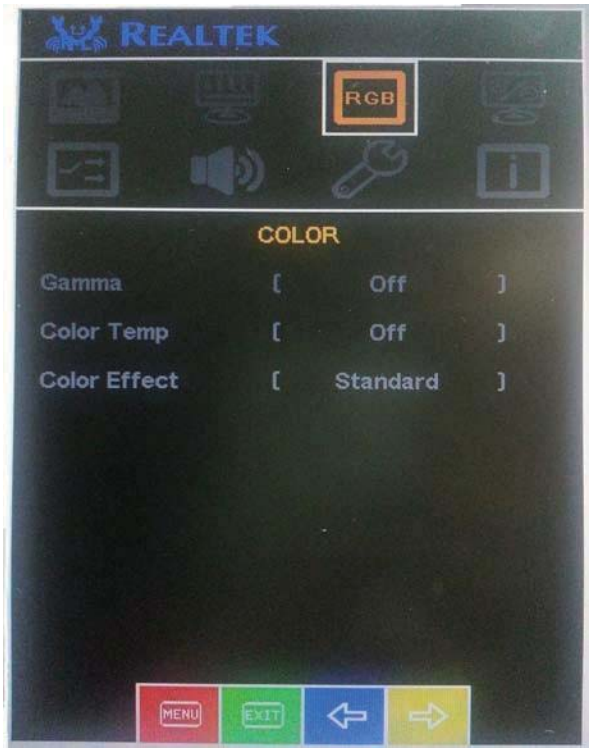

4.2-4

Advance

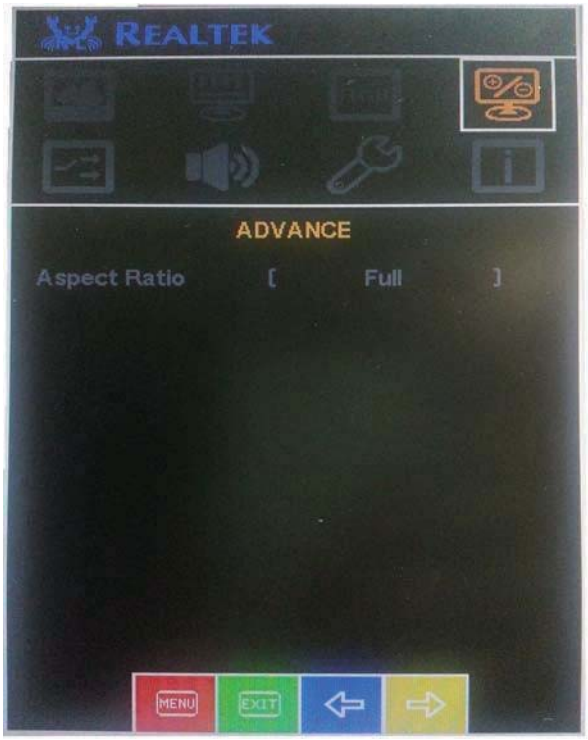

4.2-5

Source

4.2-6

Audio

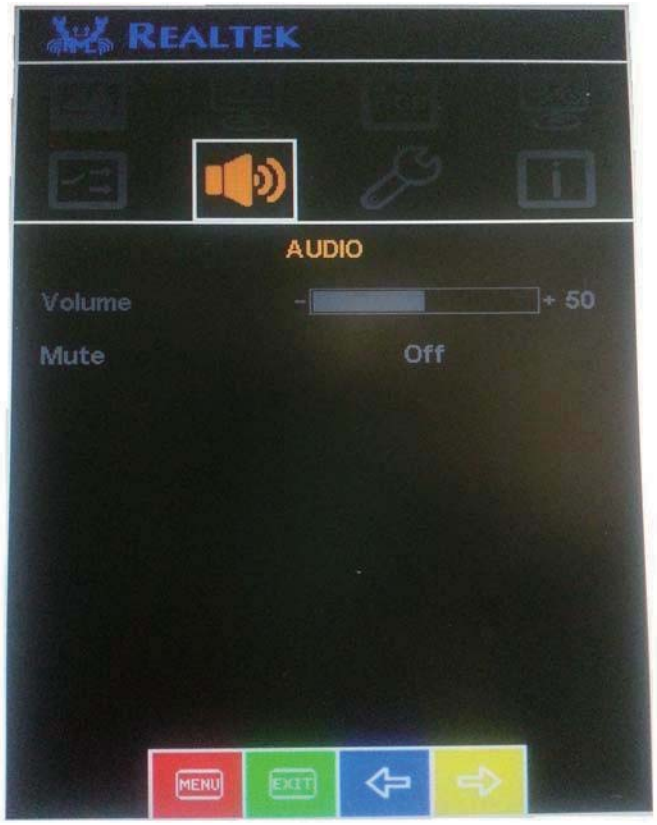

4.2-7

Other

4.2-8

Information

5. Burn in mode & other setting

5.1 Burn in mode

When no input signal, you can press “MENU” key & “POWER” key at same time to run the

“Burn in” mode, when the VGA or DVI signal input, will return to normal mode.

5.2. Factory mode