AFL3-W22C-ULT3

Intel® Core™ i5 and Celeron® ULT Processor

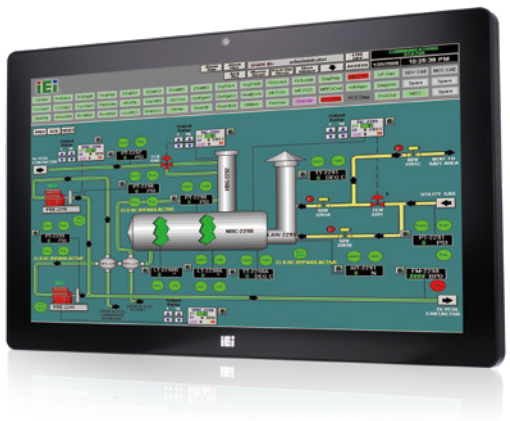

Features

- W21.5 light industrial interactive panel PC
- 9 V ~ 30 V wide range DC power input
- Selectable AT/ATX power mode
- Built-in speakers
- One mSATA slot
- IP64 compliant front panel
- IEI One Key Recovery solution alllows you to create rapid OS backup and recovery (suggested with over 4GB storage capacity)

Fanless | Bluetooth | Touchscreen | IP64 | Camera | Speakers | 9V~30V DC | One Key Recovery

Specifications

Model		AFL3-W22C-ULT3
LCD	Size	21.5"
	Resolution	1920 x 1080
	Brightness (cd/m²)	250
	Contrast Ratio	1000:1
	LCD Color	16.7M
	Pixel Pitch (mm)	248.25 (H) × 248.25 (V)
	Viewing Angle (H-V)	170º/160º
	Backlight MTBF(hrs)	30,000 (LED backlight panel)
Touch	Touch Screen	Projected capacitive with USB interface (nti-UV / anti-glare coating)
	Touch Controller	EETI EXC3180
Motherboard	CPU	Intel® Core™ i5 and Celeron® ULT Processor
	RAM	Two 260-pin 2133/1867 MHz dual-channel DDR4 SO-DIMMs (system max. 32 GB)
	Ethernet	2 x Intel® I211-AT PCIe GbE controller
	Audio Codec	ALC892
Storage		1 x mSATA (E-Window) 1 x 2.5" SATA 3Gb/s HDD bay 1 x M.2 M key PCIe (2280 or 22110)
I/O Ports & Switch		1 x RS-232 by DB-9 (RI/5V/12V) 1 x RS-232/422/485 by DB-9 (RI/5V/12V) 2 x GbE LAN 4 x USB 3.2 Gen 1 (5Gb/s) 1 x HDMI output 1 x Power switch 1 x Reset button 1 x AT/ATX switch 1 x 9-30V lockable power jack
E-Window Expansion		Yes, optional (full-size mini-PCIe slot with PCIe/SATA/USB)
Audio		AMP 3W + 3W (internal speaker)
Camera and Microphone		2-megapixel with low light function, digital microphone
Wireless & Bluetooth		IEEE 802.11 a/b/g/n/ac, Bluetooth V4.1 M.2 slot A+E key 2230 slot (PCIe/USB signal)
OSD Function		Software OSD
Physical	Front Panel Construction	PC + ABS Plastic
	Mounting	Panel, Wall, Stand and Arm VESA 75mm x 75mm / 100mm x 100mm
	Color	Black C
	Dimensions (W x H x D) (mm)	528 x 336 x 68
	Cut-out Dimensions (W x H) (mm)	502 x 303
	Net/Gross Weight (kgs)	8.27/11.27
Environment	Operating Temperature (Ambient with air flow)	-20ºC ~ 50ºC
	Storage Temperature	-20ºC ~ 60ºC
	Humidity	10% to 95% (non-condensing)
	IP Level	IP 64 compliant front panel
	Safety & EMC	CE / FCC
	Thermal Solution	Fanless
Power	Power Requirement	9 V ~ 30 VDC
	Power Consumption	12V@6A (Intel® Core™ i5-6300U CPU with 4GB DDR42133 MHz DDR4 memory)

Ordering Information

Part No.	Description
AFL3-W22C-ULT3-C/PC/4G-R13	Wide 22" 250 cd/m² 1920x1080 Panel PC with withIntel® 14nm 6th Generation Mobile Celeron®3955U (15W) on-board Processor (ULT), 1*4GB DDR4 RAM, 802.11a/b/g/n/ac WiFi module, PCAP touch, 2M camera, microphone,with AG, R13
AFL3-W22C-ULT3-i5/PC/4G-R13	Wide 22" 250 cd/m² 1920x1080 Panel PC with Intel® 14nm 6th Generation Mobile Core™ i5-6300U (15W) on-board Processor (ULT), 1*4GB DDR4 RAM, 802.11a/b/g/n/ac WiFi module, PCAP touch, 2M camera, microphone , with AG, R13

Packing List

Item	Part No.	Q'ty	Remark
Round head machine screw	44403-040061-RS	4	M2*4 round head machine screw
Pan head machine screw	44003-030052-RS	4	M4*6 pan head machine screw
Power adapter	63040-010096-100-RS	1	96W; Vin: 90V~264V AC; Vout: 12VDC

Options

Item	AFL3-W22C-ULT3
Panel Mounting Kit	AFL3PK-W19C-R10
Wall Mounting Kit	AFLWK-19B
Arm	ARM-11-RS/ARM-31-RS
Stand	STAND-A21-R10/ STAND-210-R11/STAND-A19-RS/STAND-C19-R10
Magnetic Card Reader	AFL3P-W10MSR-U-R10
Barcode Scanner	AFL3-2D-R11
RFID Reader (13.56 MHz Mifare Type) (For ATO assembly)	AFL3-MF-RFID-KIT02-R10
*OS: Win 7 Embedded (64-bit)	AFL3-W15C-ULT3-WES7P64-R10
*OS: Win 10 IOT Enterprise (64-bit)	AFL3-W15C-ULT3-W10E64-V-R10

*OS image with CD-ROM without storage

E-Window (for ATO assembly)

Part No.	Description
E-MPCIE-LAN02-R10	PCIe Mini card supports 1-port GbE with Realtek RTL8111E controller, with PMS 194C I/O bracket and 340 mm cable, R10
E-MPCIE-3G-R10	PCIe Mini card supports 3G WWAN , with PMS 130C I/O bracket, RF antenna 300mm cable and GSM antenna cable, R10

AFL3-W22C-ULT3 Fully Integrated I/O

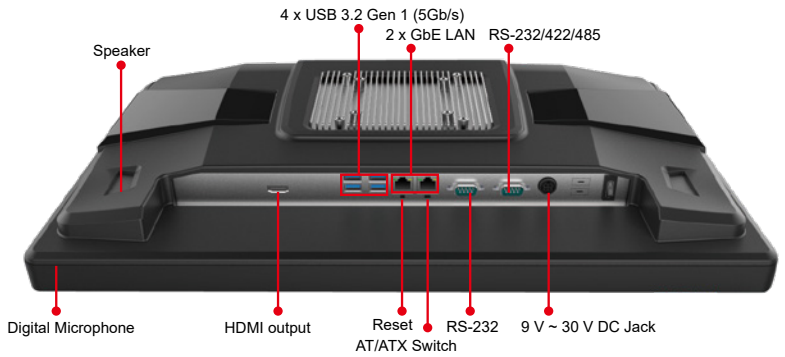
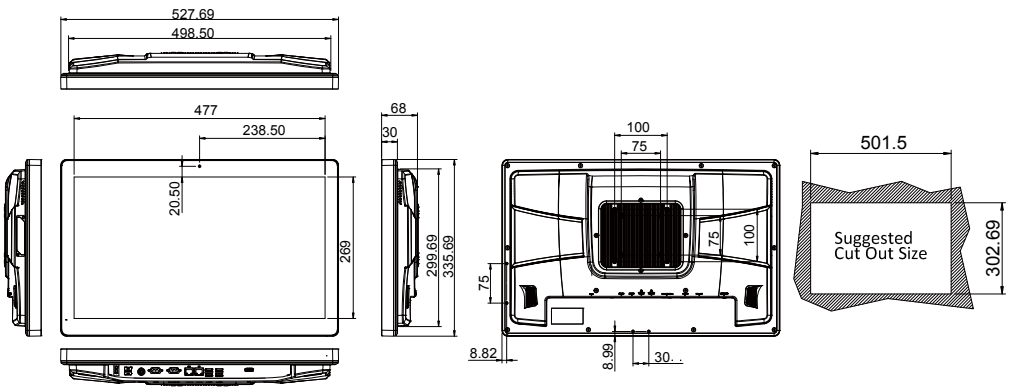
AFL3-W22C-ULT3 Dimensions (Unit: mm)