IEI Integration Corp.

MODEL:

INOX-F15C-ULT3

Stainless Steel Panel PC with Intel® Core™ i5-6300U / Celeron® 3955U CPU, Touchscreen, USB 2.0, Dual GbE LAN, RS-232/422/485, IP 69K Front Panel and RoHS

User Manual

Rev. 1.00 - January 18, 2018

RoHS Lead Free

Revision

Date	Version	Changes
January 18, 2018	1.00	Initial release

Safety Instructions

en Warning! Read the user manual before connecting the system to the power source.

de Vorsicht! Bitte lesen Sie die Bedienungsanleitung, bevor Sie das System an eine Stromquelle anschließen.

fr Attention! Avant de brancher le système à la source d'alimentation, consultez le mode d'emploi.

it Avvertenza! Consultare il manuale utente prima di collegare il sistema all'alimentatore.

es Atención! Lea atentamente este manual del usuario antes de operar la fuente de alimentación.

zh 警告！在將系統連接到電源之前，請仔細閱讀使用手冊。

cn 警告！在将系统连接到电源之前，请仔细阅读使用手冊。

---

en Warning! To prevent the system from overheating, do not operate it in an area that exceeds the maximum operating temperature described in the user manual.

de Vorsicht! Um eine Überhitzung des Systems zu vermeiden, betreiben Sie es ausschließlich im zulässigen Betriebstemperaturbereich. Dieser ist in der Bedienungsanleitung vermerkt.

fr Attention! Pour éviter la surchauffe du système, ne l'utilisez pas dans une zone dont la température dépasse les limites décrits dans le mode d'emploi.

it Avvertenza! Per evitare che il sistema si surriscaldi, non utilizzarlo in aree che superino la temperatura massima d'esercizio descritta nel manuale utente.

es Atención! Para evitar el excesivo calentamiento del sistema, no opere en las condiciones de temperatura superior a lo recomendado en este manual del usuario.

zh 警告！為防止系統過熱，不要在使用手冊上記載的產品工作溫度範圍之外操作此系統。

cn 警告！为防止系统过热，不要在使用手冊上记载的产品工作温度范围之外操作此系统。

---

en Warning! Use only the adapter and power cord approved for this system. Use of another type of adapter may risk fire or explosion. Please refer to the user manual for the power adapter specifications.

de Vorsicht! Nur zugelassene Netzteile und Netzkabel dürfen verwendet werden. Die Benutzung von anderen Netzteilen kann einen Brand oder eine Explosion zur Folge haben. Prüfen Sie die jeweiligen Spezifikationen in der Bedienungsanleitung.

fr Attention! Utilisez exclusivement le câble d'alimentation et l'adaptateur homologués pour ce système. L'utilisation d'un autre type d'adaptateur risquerait de provoquer un incendie ou une explosion. Veuillez référer au mode d'emploi pour les spécifications de l'adaptateur d'alimentation.

it Avvertenza! Utilizzare solo l'adattatore e il cavo di alimentazione approvati per questo sistema. L'uso di un altro tipo di adattatore può causare rischio d'incendio o esplosione. Si prega di fare riferimento al manuale utente per le specifiche sull'alimentazione.

es Atención! Utilice solamente el adaptador de corriente alterna (CA) con Marcas Conformidad otorgadas. Cualquier otro adaptador no otorgado aumenta el riesgo de explosión o incendio. Por favor consulte el manual del usuario para las especificaciones del adaptador de alimentación.

zh 警告！只能使用經過認證、適用於本系統的電源變壓器與電源線。使用不適用的電源變壓器將可能導致火災或爆炸。電源變壓器規格請參考使用手冊。

cn 警告！只能使用经过认证，适用于本系统的电源适配器与电源线。使用不适用的电源适配器将可能导致火灾或爆炸。电源适配器规格请参考使用手冊。

---

en Warning! Ultimate disposal of this product should be handled according to all national laws and regulations.

de Vorsicht! Die Entsorgung dieses Produkts sollte gemäß allen Bestimmungen und Gesetzen des Landes erfolgen.

fr Attention! La mise au rebut ou le recyclage de ce produit sont généralement soumis aux lois et/ou directives de respect de l'environnement. Renseignez-vous auprès de l'organisme compétent.

it Avvertenza! Lo smaltimento di questo prodotto deve essere eseguito secondo le leggi e i regolamenti locali.

es Atención! La disposición final de residuos de este producto se debe cumplir con las normativas y leyes del país.

zh 警告！本產品的廢棄處理應根據該國家的法律和規章進行。

cn 警告！本产品的废弃处理应根据该国家的法律和规章进行。

Copyright

COPYRIGHT NOTICE

TRADEMARKS

Manual Conventions

WARNING

Warnings appear where overlooked details may cause damage to the equipment or result in personal injury. Warnings should be taken seriously.

CAUTION

Cautionary messages should be heeded to help reduce the chance of losing data or damaging the product.

NOTE

These messages inform the reader of essential but non-critical information. These messages should be read carefully as any directions or instructions contained therein can help avoid making mistakes.

HOT SURFACE

This symbol indicates a hot surface that should not be touched without taking care.

Table of Contents

List of Figures

List of Tables

List of BIOS Menus

Chapter

1

Introduction

1.1 Overview

Figure 1-1: INOX-F15C-ULT3 Stainless Steel Panel PC

The INOX-F15C-ULT3 series is a quad-core Intel® Core™ i5-6300U or Intel® Celeron® 3955U powered stainless steel panel PC with a rich variety of functions and peripherals.

The stainless steel design and the IP69K compliant front panel make the INOX-F15C-ULT3 an ideal system for use in high temperature, high pressure environment.

The Intel® Core™ i5-6300U / Celeron® 3955U is a System-on-Chip (SoC) that ensures optimal memory, graphics, and peripheral I/O support. The system comes with 4.0 GB of DDR4 SO-DIMM memory ensuring smooth data throughputs with reduced bottlenecks and fast system access.

Multiple M12 connectors ensure simplified connectivity to a variety of external peripheral devices, including two GbE LAN, two RS-232/422/485 and four USB 2.0.

1.2 Model Variations

There are several models in the INOX-F15C-ULT3 series. The model numbers and model variations are listed below.

Model	Size	Processor	Touchscreen
INOX-F15C-ULT3-C/R/4G	15”	Intel® Celeron® 3955U	Resistive type
INOX-F15C-ULT3-C/PC/4G	15”	Intel® Celeron® 3955U	Projected capacitive type
INOX-F15C-ULT3-i5/R/4G	15”	Intel® Core™ i5-6300U	Resistive type
INOX-F15C-ULT3-i5/PC/4G	15”	Intel® Core™ i5-6300U	Projected capacitive type

Table 1-1: Model Variations

1.3 Features

The INOX-F15C-ULT3 features are listed below:

- 15” LCD with LED backlight
- IP69K compliant front panel for high temperature, high pressure wash-down applications
- Intel® Core™ i5-6300U or Intel® Celeron® 3955U processor
- Preinstalled with 4 GB of DDR4 memory (system max. 32 GB)
- SUS304 stainless steel housing
- Resistive type or projected capacitive type touchscreen
- Fanless design
- Easy-access HDD bay
- Multiple M12 connectors provide various I/O connections, including two GbE LAN, two RS-232/422/485 and four USB 2.0
- 9 V – 36 V wide range DC power input

1.4 Front Panel

The front side of the INOX-F15C-ULT3 is a panel with a TFT LCD touchscreen surrounded by a stainless steel frame (**Figure 1-2**). The front panel is IP69K compliant to withstand high temperature and high pressure wash-down.

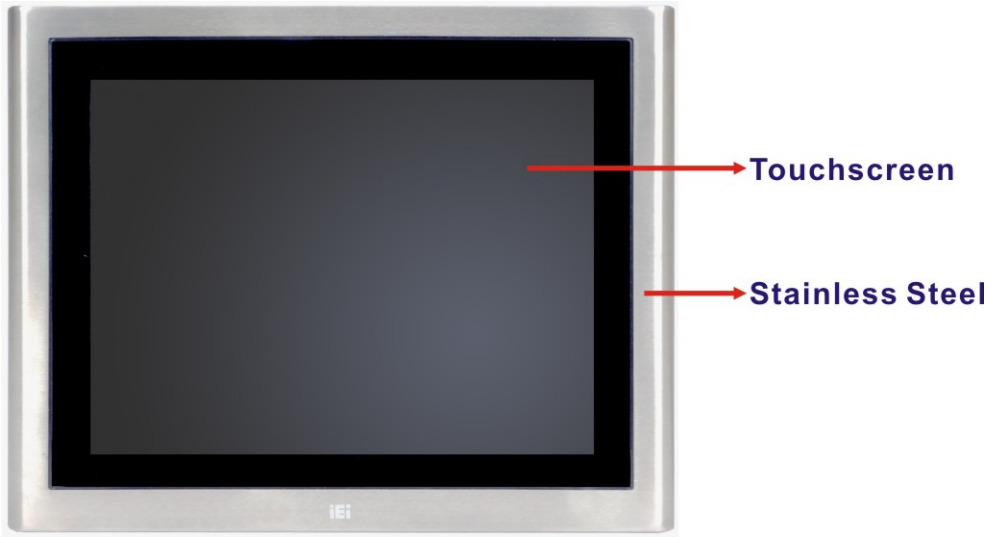

Figure 1-2: Front View

1.5 Rear Panel

The rear panel of the INOX-F15C-ULT3 has the following connectors and switches. The rear panel also provides access for installing a 2.5” SATA SSD.

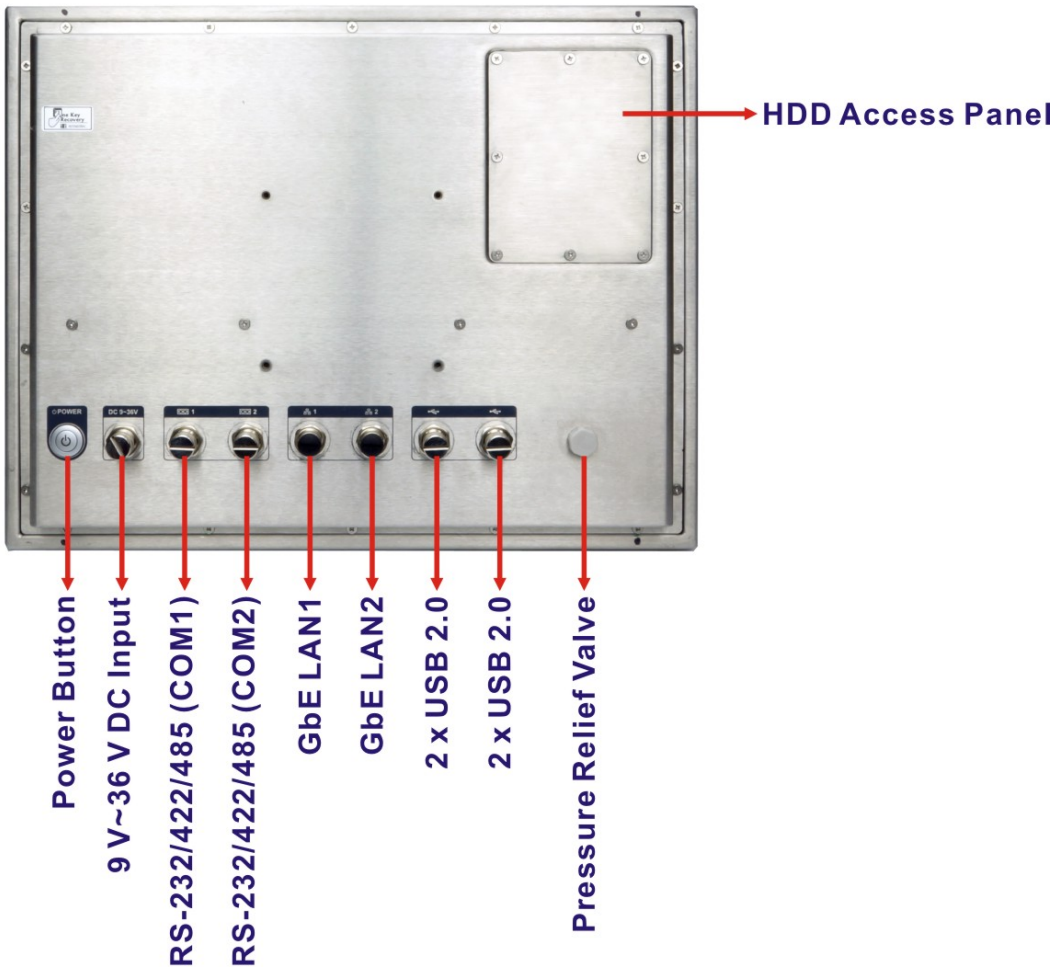

Figure 1-3: Rear Panel

1.6 System Specifications

The technical specifications for the INOX-F15C-ULT3 systems are listed in **Table 1-2**.

Specification	INOX-F15C-ULT3
LCD Size	15"
Max. Resolution	1024 (W) x 768 (H)
Brightness (cd/m^2)	450
Contrast Ratio	800:1
LCD Color	16.2M
Pixel Pitch (H x V) (mm)	0.297 x 0.297
Viewing Angle (H-V)	160° / 150°
Backlight MTBF	70,000 hrs
Backlight	LED
Touchscreen	Resistive type / Projected capacitive type
CPU (SoC)	Intel® Core™ i5-6300U or Intel® Celeron® 3955U
Memory	Two 260-pin 2133/1867 MHz dual-channel DDR4 SO-DIMM slots preinstalled with 4 GB SDRAM (system max. 32 GB)
Ethernet	Two Intel® I210 PCIe GbE controllers
Storage	1 x 2.5” SATA 6Gb/s SSD bay
Expansions	1 x Full-size PCIe Mini card slot (SATA 6Gb/s) 1 x Full-size/half-size PCIe Mini card slot (PCIe x1 and USB 2.0 signals) 1 x M.2 B-key slot (for M.2 2242/2260/2280, supporting USB 3.0, PCIe x2 and SATA signals)
Construction Material	SUS304 stainless steel housing

Thermal Design	Fanless
VESA Mount	100 mm x 100 mm (with M4 screws)
Net/Gross Weight	6.9 kg / 9.8 kg
Dimensions (W x H x D)	414.0 mm x 328.4 mm x 51.9 mm
Operating Temperature	-20ºC ~ 50ºC
Storage Temperature	-20ºC ~ 60ºC
Humidity	10% ~ 95% (non-condensing)
IP Level	Front panel: IP69K Others: IP66
Safety/EMC	CE, FCC Class A
Power Supply	100 W power adapter (optional)
Input:	100 V ~ 240 V AC, 50 Hz ~ 60 Hz
Output:	12 V DC, 8.34 A
Power Requirement	9 V ~ 36 V DC
Power Consumption	50 W, 9 ~ 36 V ⎓ 5.5 ~ 1.4 A
I/O Ports and Switches	2 x RS-232/422/485 serial port (8-pin M12 connector) 2 x GbE LAN (8-pin M12 X-Coded connector) 2 x USB 2.0 connector (8-pin M12 connector, each supports two USB ports) 1 x 9 V ~ 36 V DC input jack (5-pin M12 connector) 1 x Power switch with power LED indicator 1 x Pressure relief valve

Table 1-2: System Specifications

1.7 Dimensions

The dimensions of the INOX-F15C-ULT3 are shown below.

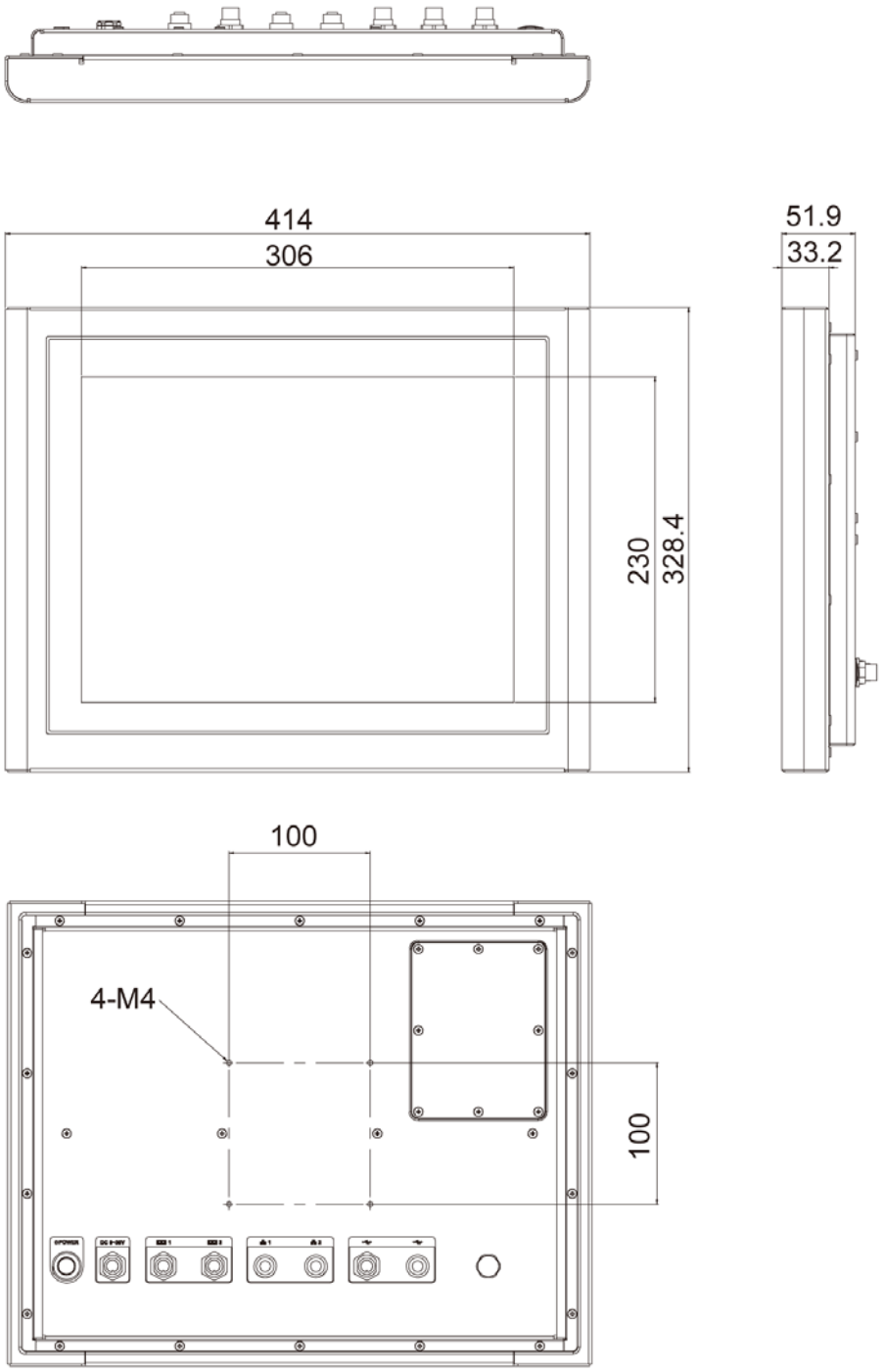

Figure 1-4: Dimensions (mm)

Chapter

2

Unpacking

2.1 Unpacking

To unpack the panel PC, follow the steps below:

WARNING!

The front side LCD screen has a protective plastic cover stuck to the screen. Only remove the plastic cover after the panel PC has been properly installed. This ensures the screen is protected during the installation process.

Step 1: Carefully cut the tape sealing the box. Only cut deep enough to break the tape.

Step 2: Open the outside box.

Step 3: Carefully cut the tape sealing the box. Only cut deep enough to break the tape.

Step 4: Open the inside box.

Step 5: Lift the panel PC out of the boxes.

Step 6: Remove the peripheral parts box from the main box.

2.2 Packing List

NOTE:

If any of the components listed in the checklist below are missing, do not proceed with the installation. Contact the IEI reseller or vendor the INOX-F15C-ULT3 was purchased from or contact an IEI sales representative directly by sending an email to sales@ieiworld.com.

The INOX-F15C-ULT3 panel PC is shipped with the following components:

Quantity	Item	Image
1	INOX-F15C-ULT3 panel PC	
1	Power cable	
1	USB cable	
1	Ferrite core for USB cable	
4	Flat-head screw (M3*5)	
8	Pan-head screw (6#32*8) with Nylok	
1	Touch Pen (resistive type only)	

1	Utility CD	
1	One Key Recovery CD	

2.3 Optional Items

The following are optional components which may be separately purchased:

NOTE:

It is recommended that each M12 cable should be installed with a ferrite core to reduce EMI. Therefore, be sure to purchase a ferrite core for the M12 cable to be purchased. The optional M12 cables include USB cable, RJ-45 LAN cable and DB-9 COM port cable.

Item and Part Number	Image
USB cable (**P/N**: 32001-001000-100-RS or 32001-001000-300-RS)	
RJ-45 LAN cable (**P/N**: 32013-003200-100-RS)	

Item and Part Number	Image
DB-9 COM port cable (**P/N**: 32005-000100-100-RS or 32005-000100-300-RS)	
Ferrite core (**P/N**: 30600-000058-RS)	
Waterproof power adapter (100 W) (**P/N**: 63040-030080-000-RS)	
Arm (**P/N**: ARM-31-RS)	
Stand for VESA 100 (**P/N**: STAND-A19-RS)	
Stand for VESA 75/VESA 100 (**P/N**: STAND-C19-R10)	

If any of these items are missing or damaged, contact the distributor or sales representative immediately.

Chapter

3

Installation

3.1 Anti-static Precautions

WARNING:

Failure to take ESD precautions during the maintenance of the INOX-F15C-ULT3 may result in permanent damage to the INOX-F15C-ULT3 and severe injury to the user.

Electrostatic discharge (ESD) can cause serious damage to electronic components, including the INOX-F15C-ULT3. Dry climates are especially susceptible to ESD. It is therefore critical that whenever the INOX-F15C-ULT3 is accessed internally, or any other electrical component is handled, the following anti-static precautions are strictly adhered to.

- ***Wear an anti-static wristband***: Wearing a simple anti-static wristband can help to prevent ESD from damaging the board.
- ***Self-grounding***: Before handling the board, touch any grounded conducting material. During the time the board is handled, frequently touch any conducting materials that are connected to the ground.
- ***Use an anti-static pad***: When configuring the INOX-F15C-ULT3, place it on an anti-static pad. This reduces the possibility of ESD damaging the INOX-F15C-ULT3.
- ***Only handle the edges of the PCB***: When handling the PCB, hold the PCB by the edges.

3.2 Installation Precautions

When installing the panel PC, please follow the precautions listed below:

- **Power turned off**: When installing the panel PC, make sure the power is off. Failing to turn off the power may cause severe injury to the body and/or damage to the system.
- **Certified Engineers**: Only certified engineers should install and modify onboard functionalities.

- **Anti-static Discharge**: If a user open the rear panel of the panel PC, to configure the jumpers or plug in added peripheral devices, ground themselves first and wear an anti-static wristband.

3.3 HDD Installation

To install the HDD into the system, please follow the steps below:

Step 1: Remove the HDD panel located on the rear panel by removing the eight retention screws.

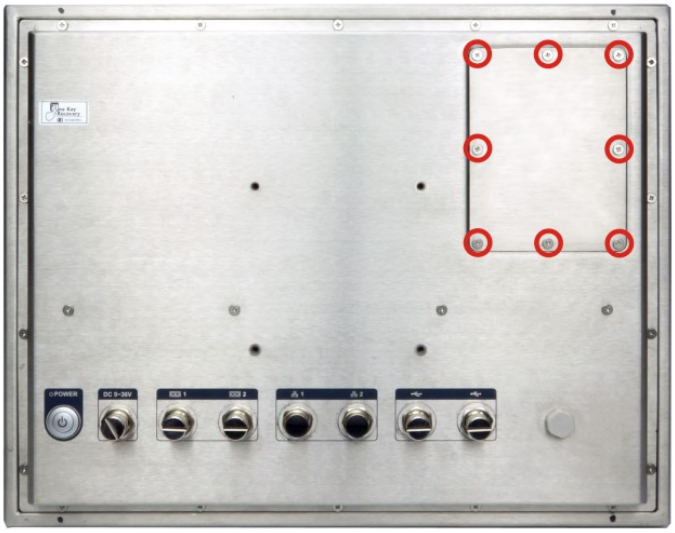

Figure 3-1: HDD Panel Retention Screws

Step 2: The HDD bracket for installing HDD is located on the bottom side of the HDD panel. Attach an HDD to the HDD bracket. To do this, align the four retention screw holes on the both sides of the HDD with the retention screw holes in the HDD brackets. Insert four M3*5 retention screws shipped with the package into the HDD bracket (**Figure 3-2**).

Step 3: Connect the pre-installed SATA cable from the INOX-F15C-ULT3 to the rear of the HDD (**Figure 3-2**).

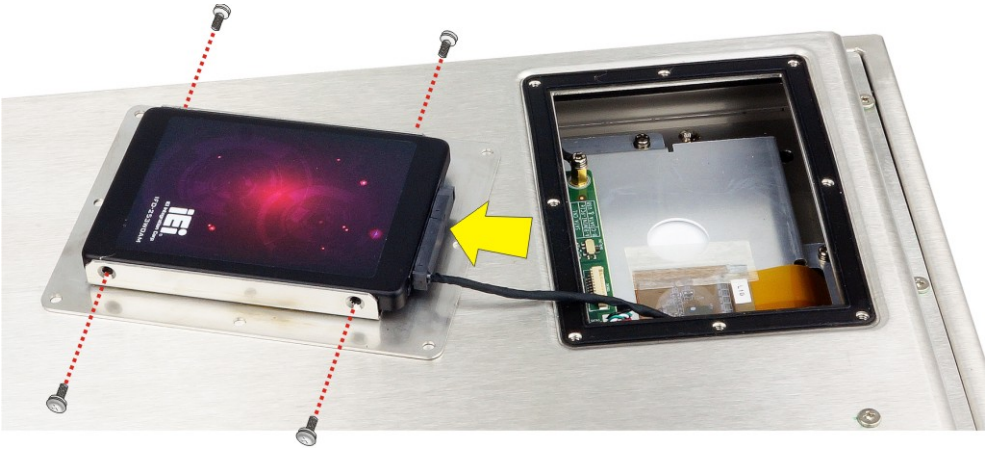

Figure 3-2: HDD Installation

Step 4: Install the HDD panel back to the rear panel of the INOX-F15C-ULT3 by using the 6#32*8 retention screws with Nylok shipped with the package, and a tightening torque of 5 kg-cm (4.3 lb-in/0.49 N-m).

WARNING:

To ensure the system is completely watertight, the HDD panel retention screws with Nylok must be used and tightened to 5 kg-cm (4.3 lb-in / 0.49 N-m).

3.4 External I/O Connectors

The INOX-F15C-ULT3 is equipped with several M12 connectors for I/O interface connection. These M12 connectors are all protected with metal/plastic dust caps. Please remove the dust cap before connection.

3.4.1 COM Port Connection

The INOX-F15C-ULT3 has two 8-pin M12 connectors for RS-232/422/485 serial port connection. The pinouts for the RS-232/422/485 connectors are listed in the figure and table below.

Figure 3-3: RS-232/422/485 Connector (COM1, COM2)

PIN NO.	DESCRIPTION
1	DCD
2	SIN+
3	SOUT
4	DTR
5	GND
6	DSR
7	RTS
8	CTS

Table 3-1: RS-232/422/485 Connector Pinouts

[Optional Choice]

The DB-9 COM port cable (**Figure 3-4**) can be purchased separately. The user can use the cable to connect the INOX-F15C-ULT3 with serial devices. The COM port cable should be installed with a ferrite core to reduce EMI. To install the ferrite core, please refer to **Section 3.4.3.1**.

Figure 3-4: DB-9 COM Port Cable

The DB-9 connector pinouts of the COM port cable are listed below.

PIN NO.	RS-232	RS-422	RS-485
1	DCD	TXD422-	TXD485-
2	RXD	TXD422+	TXD485+
3	TXD	RXD422+	--
4	DTR	RXD422-	--
5	GND	--	--
6	DSR	--	--
7	RTS	--	--
8	CTS	--	--
9	--	--	--

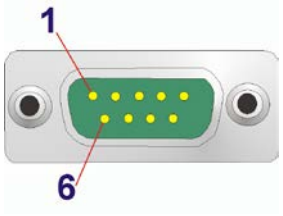

Table 3-2: RS-232/422/485 Serial Port Pinouts

3.4.2 LAN Port Connection

The INOX-F15C-ULT3 has two 8-pin M12 X-Coded connectors for GbE LAN connection. The pinouts for the LAN connectors are listed in the figure and table below.

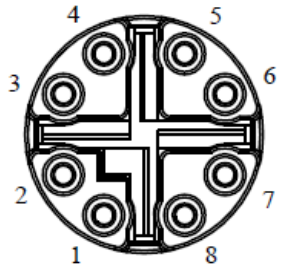

Figure 3-5: LAN Connector

PIN NO.	DESCRIPTION
1	P0
2	N0
3	P1
4	N1
5	P3
6	N3
7	N2
8	P2

Table 3-3: LAN Connector Pinouts

The RJ-45 LAN cable (**Figure 3-4**) can be purchased separately. The user can use the cable to connect the INOX-F15C-ULT3 with network. The LAN cable should be installed with a ferrite core to reduce EMI. To install the ferrite core, please refer to **Section 3.4.3.1**.

Figure 3-6: RJ-45 LAN Cable

3.4.3 USB Port Connection

The INOX-F15C-ULT3 has two 8-pin M12 connectors for USB 2.0 connection. Each M12 connector supports two USB 2.0 ports connection. The pinouts for the USB 2.0 connectors are listed in the figure and table below.

Figure 3-7: USB 2.0 Connector

PIN NO.	DESCRIPTION
1	USB POWER
2	SUSB POWER
3	2-
4	2+
5	GND
6	1+
7	1-
8	GND

Table 3-4: USB 2.0 Connector Pinouts

3.4.3.1 Ferrite Core Installation

An USB cable is shipped with the INOX-F15C-ULT3. The USB cable should be installed with a ferrite core to reduce EMI. To install the ferrite core, follow the steps below.

Step 1: Open the ferrite core by unsnapping the latch.

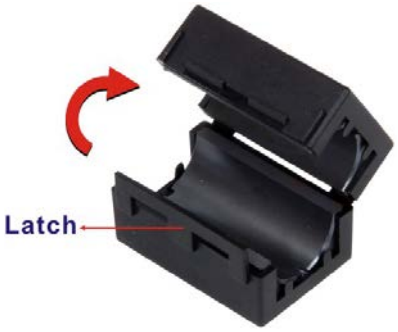

Figure 3-8: Open Ferrite Core

Step 2: Gently wrap the USB cable around the ferrite core. The USB cable should pass through the core twice as shown below. The ferrite core must be installed as close to the M12 connector as possible.

Figure 3-9: Wrapping Cable around the Core

Step 3: Close the ferrite core and snap the latch back together. Then, pull both ends of the cable in opposite direction to tighten the loop.

Figure 3-10: Cable Installed with Ferrite Core

3.4.4 Power Input Connection

The INOX-F15C-ULT3 has one 5-pin M12 connector that supports 9 V ~ 36 V power input connection. The pinouts for the power input connector are listed in the figure and table below.

Figure 3-11: Power Input Connector

PIN NO.	DESCRIPTION
1	DC IN
2	DC IN
3	GND
4	GND
5	GND

Table 3-5: Power Input Connector Pinouts

3.5 Mounting the System

The INOX-F15C-ULT3 is VESA (Video Electronics Standards Association) compliant and can be mounted on a mounting device with a 100 mm interface pad. The INOX-F15C-ULT3 VESA mount retention screw holes are shown in **Figure 3-12**. Refer to the installation guide that came with the mounting device to mount the INOX-F15C-ULT3.

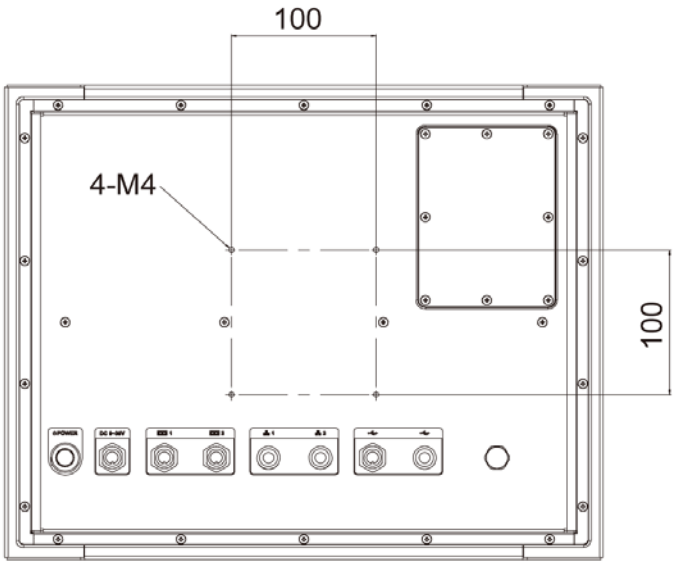

Figure 3-12: VESA Mounting Retention Screw Holes

NOTE:

When purchasing the mounting device, please ensure that it is VESA compliant and that the device has a 100 mm interface pad. If the mounting device is not VESA compliant, it cannot be used to support the INOX-F15C-ULT3 panel PC.

3.6 Powering On the System

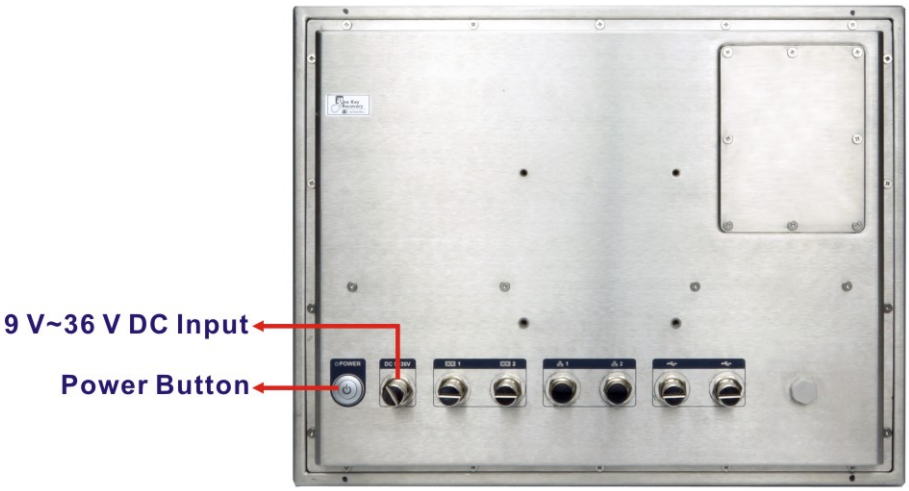

Figure 3-13: Powering On the System

To power on the system, follow the steps below:

Step 1: Connect the M12 connector of the power cable to the INOX-F15C-ULT3. Connect the terminal block of the power cable to a power source. The terminal block pinouts are shown below.

Figure 3-14: Terminal Block Pinouts of Power Cable

Step 2: Locate the power button on the rear panel.

Step 3: Short press the power button to power up the system. Once powered up, the power LED on the power button turns on in blue.

3.7 System Maintenance

It is suggested not to remove the rear cover to access the system internally. If any internal components of the INOX-F15C-ULT3 fail, please contact the system reseller or vendor to ship the system back to IEI for repair.

NOTE:

A user cannot replace a motherboard. If the motherboard fails it must be shipped back to IEI to be replaced. Please contact the system vendor, reseller or an IEI sales person directly.

3.8 Software Installation

NOTE:

The content of the CD may vary throughout the life cycle of the product and is subject to change without prior notice. Visit the IEI website or contact technical support for the latest updates.

All the drivers for the INOX-F15C-ULT3 are on the utility CD that came with the system. The utility CD contains drivers for Windows 8.1 (64-bit) and Windows 10 (64-bit) operating systems. If the drivers are not installed automatically, please install the following drivers manually.

- Chipset
- VGA
- LAN
- Intel® Serial IO
- ME (Intel® AMT)
- Touchscreen

3.9 Installing Windows 7 from USB 3.0 Drives

Microsoft Windows 7 installation media does not include native driver support for USB 3.0, so during installation, a keyboard/mouse connected to a USB 3.0 port does not respond. The Windows 7 USB 3.0 Creator Utility automates the steps to update a Windows 7 installation image so that it contains USB 3.0 drivers. To install Windows 7 from a USB drive onto the INOX-F15C-ULT3, please follow the steps described below.

Step 1: Create a USB flash drive installer. Use your Windows 7 DVD or ISO image to create a bootable USB flash drive. Instructions on how to do are found on Microsoft's website.

Step 2: Download and unzip the Windows 7 USB 3.0 Creator utility to a temporary folder on the Admin system.

Step 3: Connect the USB device containing the Windows 7 image to the Admin system.

Step 4: Right-click the file "Installer_Creator.exe" and select Run as administrator.

Step 5: Browse to the root of the USB drive.

Step 6: Click "Create Image" to begin the creation process.

Step 7: Wait for the process to finish. It can take up to 15 minutes.

Step 8: Using the updated installer, proceed with the Windows 7 installation as you normally would.

Chapter

4

BIOS Setup

4.1 Introduction

The BIOS is programmed onto the BIOS chip. The BIOS setup program allows changes to certain system settings. This chapter outlines the options that can be changed.

NOTE:

Some of the BIOS options may vary throughout the life cycle of the product and are subject to change without prior notice.

4.1.1 Starting Setup

The UEFI BIOS is activated when the computer is turned on. The setup program can be activated in one of two ways.

1. Press the **DELETE** or **F2** key as soon as the system is turned on or
2. Press the **DELETE** or **F2** key when the "**Press Del to enter SETUP**" message appears on the screen.

If the message disappears before the **DELETE** or **F2** key is pressed, restart the computer and try again.

4.1.2 Using Setup

Use the arrow keys to highlight items, press **ENTER** to select, use the PageUp and PageDown keys to change entries, press **F1** for help and press **ESC** to quit. Navigation keys are shown in.

Key	Function
Up arrow	Move to previous item
Down arrow	Move to next item
Left arrow	Move to the item on the left hand side
Right arrow	Move to the item on the right hand side
+	Increase the numeric value or make changes

Key	Function
-	Decrease the numeric value or make changes
F1 key	General help, only for Status Page Setup Menu and Option Page Setup Menu
F2 key	Load previous values.
F3 key	Load optimized defaults
F4 key	Save changes and Exit BIOS
Esc key	Main Menu – Quit and not save changes into CMOS Status Page Setup Menu and Option Page Setup Menu -- Exit current page and return to Main Menu

4.1.3 Getting Help

When **F1** is pressed a small help window describing the appropriate keys to use and the possible selections for the highlighted item appears. To exit the Help Window press **Esc** or the **F1** key again.

4.1.4 BIOS Menu Bar

The **menu bar** on top of the BIOS screen has the following main items:

- Main – Changes the basic system configuration.
- Advanced – Changes the advanced system settings.
- Chipset – Changes the chipset settings.
- Security – Sets User and Supervisor Passwords.
- Boot – Changes the system boot configuration.
- Save & Exit – Selects exit options and loads default settings

The following sections completely describe the configuration options found in the menu items at the top of the BIOS screen and listed above.

4.2 Main

The **Main** BIOS menu (**BIOS Menu 1**) appears when the **BIOS Setup** program is entered.

```
      Aptio Setup Utility – Copyright (C) 2017 American Megatrends, Inc.
  Main   Advanced   Chipset   Security    Boot    Save & Exit
BIOS Information
BIOS Vendor                        American Megatrends     Set the Date. Use Tab to
Core Version                       5.11                    switch between Data
Compliency                         UEFI 2.4; PI 1.3        elements.
Project Version                    Z358AR10.ROM
Build Date and Time                03/30/2017 13:50:45

Processor Information
Name                               SkyLake
Brand String                       Intel(R) Core(TM)
                                   i5-6300U CPU @ 2.40GHz
Frequency                          2300 MHz
Processor ID                       406E3
Stepping                           D0/K0
Number of Processors               2Core(s) / 4Thread(s)   ---------------------
Microcode Revision                 7C
GT Info                            GT2                     ←→: Select Screen
                                                           ↑ ↓: Select Item
IGFX VBIOS Version                 1040                    EnterSelect
Memory RC Version                  1.9.0.0                 +/-: Change Opt.
Total Memory                       4096 MB                 F1:  General Help
Memoery Frequency                  2133 MHz                F2:  Previous Values
                                                           F3:  Optimized Defaults
PCH Information                                            F4:  Save & Exit
Name                               SKL PCH-LP              ESC: Exit
PCH SKU                            PCH-LP Mobile (U)
                                   Premium SKU
Stepping                           21/C1
LAN PHY Revision                   N/A

ME FW Version                      11.0.0.1202
ME Firmware SKU                    Corporate SKU

SPI Clock Frequency
D0FR Support                       Unsupported
Read Status Clock Frequency        17 MHz
Write Status Clock Frequency       17 MHz
Fast Read Status Clock Frequency 17 MHz

System Date                        [Fri 01/01/2010]
System Time                        [00:18:35]
        Version 2.17.1255. Copyright (C) 2017 American Megatrends, Inc.
```

BIOS Menu 1: Main

The System Overview field also has two user configurable fields:

➔ **System Date [xx/xx/xx]**

Use the **System Date** option to set the system date. Manually enter the day, month and year.

➔ **System Time [xx:xx:xx]**

Use the **System Time** option to set the system time. Manually enter the hours, minutes and seconds.

4.3 Advanced

Use the **Advanced** menu (**BIOS Menu 2**) to configure the CPU and peripheral devices through the following sub-menus:

WARNING!

Setting the wrong values in the sections below may cause the system to malfunction. Make sure that the settings made are compatible with the hardware.

```
      Aptio Setup Utility – Copyright (C) 2017 American Megatrends, Inc.
  Main    Advanced  Chipset   Security    Boot    Save & Exit

> ACPI Settings                                   System ACPI Parameters.
> F81866 Super IO Configuration
> F81866 H/W Monitor
> RTC Wake Settings
> Serial Port Console Redirection                 ----------------------
> CPU Configuration                               ←→: Select Screen
> SATA Configuration                              ↑ ↓: Select Item
> USB Configuration                               EnterSelect
> iEi Feature                                     F1   General Help
                                                  F2   Previous Values
                                                  F3   Optimized Defaults
                                                  F4   Save
                                                  ESC  Exit
       Version 2.17.1255. Copyright (C) 2017 American Megatrends, Inc.
```

BIOS Menu 2: Advanced

4.3.1 ACPI Settings

The **ACPI Settings** menu (**BIOS Menu 3**) configures the Advanced Configuration and Power Interface (ACPI) options.

```
Aptio Setup Utility – Copyright (C) 2017 American Megatrends, Inc.
Advanced

ACPI Settings                                   Select the highest ACPI
                                                sleep state the system
ACPI Sleep State                [S3 (Suspend to RAM]  will enter when the
                                                SUSPEND button is
                                                pressed.

                                                ----------------------

                                                ←→: Select Screen
                                                ↑ ↓: Select Item
                                                EnterSelect
                                                +/-: Change Opt.
                                                F1:  General Help
                                                F2:  Previous Values
                                                F3:  Optimized Defaults
                                                F4:  Save & Exit
                                                ESC: Exit
Version 2.17.1255. Copyright (C) 2017 American Megatrends, Inc.
```

BIOS Menu 3: ACPI Settings

➔ **ACPI Sleep State [S3 (Suspend to RAM)]**

Use the **ACPI Sleep State** option to specify the sleep state the system enters when it is not being used.

➔ **S3 (Suspend to RAM)** DEFAULT — The caches are flushed and the CPU is powered off. Power to the RAM is maintained. The computer returns slower to a working state, but more power is saved.

4.3.2 F81866 Super IO Configuration

Use the **F81866 Super IO Configuration** menu (**BIOS Menu 4**) to set or change the configurations for the serial ports.

```
Aptio Setup Utility – Copyright (C) 2017 American Megatrends, Inc.
Advanced

F81866 Super IO Configuration                    Set Parameters of Serial
                                                 Port 1 (COMA)
Super IO Chip                    F81866
> Serial Port 1 Configuration                    ---------------------
> Serial Port 2 Configuration                    ←→: Select Screen
                                                 ↑ ↓: Select Item
                                                 EnterSelect
                                                 F1   General Help
                                                 F2   Previous Values
                                                 F3    Optimized
                                                 Defaults
                                                 F4    Save
                                                 ESC   Exit
Version 2.17.1255. Copyright (C) 2017 American Megatrends, Inc.
```

BIOS Menu 4: F81866 Super IO Configuration

4.3.2.1 Serial Port n Configuration

Use the **Serial Port n Configuration** menu (**BIOS Menu 5**) to configure the serial port n.

```
Aptio Setup Utility – Copyright (C) 2017 American Megatrends, Inc.
Advanced

Serial Port 1 Configuration                      Enable or Disable Serial
                                                 Port (COM)
Serial Port                      [Enabled]
Device Settings                  IO=3F8h; IRQ=4
                                                 ---------------------
Change Settings                  [Auto]          ←→: Select Screen
Device Mode                      [RS232]         ↑ ↓: Select Item
                                                 EnterSelect
                                                 F1   General Help
                                                 F2   Previous Values
                                                 F3    Optimized
                                                 Defaults
                                                 F4    Save
                                                 ESC   Exit
Version 2.17.1255. Copyright (C) 2017 American Megatrends, Inc.
```

BIOS Menu 5: Serial Port n Configuration

4.3.2.1.1 Serial Port 1 Configuration

➔ **Serial Port [Enabled]**

Use the **Serial Port** option to enable or disable the serial port.

➔ **Disabled**		Disable the serial port
➔ **Enabled**	**DEFAULT**	Enable the serial port

➔ **Change Settings [Auto]**

Use the **Change Settings** option to change the serial port IO port address and interrupt address.

➔ **Auto**	**DEFAULT**	The serial port IO port address and interrupt address are automatically detected.
➔ **IO=3F8h; IRQ=4**		Serial Port I/O port address is 3F8h and the interrupt address is IRQ4
➔ **IO=3F8h; IRQ=3, 4,5,6,7,9,10,11,12**		Serial Port I/O port address is 3F8h and the interrupt address is IRQ3,4,5,6,7,9,10,11,12
➔ **IO=2F8h; IRQ=3, 4,5,6,7,9,10,11,12**		Serial Port I/O port address is 2F8h and the interrupt address is IRQ3,4,5,6,7,9,10,11,12
➔ **IO=3E8h; IRQ=3, 4,5,6,7,9,10,11,12**		Serial Port I/O port address is 3E8h and the interrupt address is IRQ3,4,5,6,7,9,10,11,12
➔ **IO=2E8h; IRQ=3, 4,5,6,7,9,10,11,12**		Serial Port I/O port address is 2E8h and the interrupt address is IRQ3,4,5,6,7,9,10,11,12

➔ **Device Mode [RS232]**

Use the **Device Mode** option to select the Serial Port 1 signaling mode.

➔ **RS422**		Serial Port 1 signaling mode is RS-422
➔ **RS232**	**DEFAULT**	Serial Port 1 signaling mode is RS-232
➔ **RS485**		Serial Port 1 signaling mode is RS-485

4.3.2.1.2 Serial Port 2 Configuration

➔ **Serial Port [Enabled]**

Use the **Serial Port** option to enable or disable the serial port.

➔ **Disabled**		Disable the serial port
➔ **Enabled**	**DEFAULT**	Enable the serial port

➔ **Change Settings [Auto]**

Use the **Change Settings** option to change the serial port IO port address and interrupt address.

➔ **Auto**	**DEFAULT**	The serial port IO port address and interrupt address are automatically detected.
➔ **IO=2F8h; IRQ=3**		Serial Port I/O port address is 2F8h and the interrupt address is IRQ3
➔ **IO=3F8h; IRQ=3, 4,5,6,7,9,10,11,12**		Serial Port I/O port address is 3F8h and the interrupt address is IRQ3,4,5,6,7,9,10,11,12
➔ **IO=2F8h; IRQ=3, 4,5,6,7,9,10,11,12**		Serial Port I/O port address is 2F8h and the interrupt address is IRQ3,4,5,6,7,9,10,11,12
➔ **IO=3E8h; IRQ=3, 4,5,6,7,9,10,11,12**		Serial Port I/O port address is 3E8h and the interrupt address is IRQ3,4,5,6,7,9,10,11,12
➔ **IO=2E8h; IRQ=3, 4,5,6,7,9,10,11,12**		Serial Port I/O port address is 2E8h and the interrupt address is IRQ3,4,5,6,7,9,10,11,12

➔ **Device Mode [RS232]**

Use the **Device Mode** option to select the Serial Port 2 signaling mode.

➔ **RS422**		Serial Port 2 signaling mode is RS-422
➔ **RS232**	**DEFAULT**	Serial Port 2 signaling mode is RS-232
➔ **RS485**		Serial Port 2 signaling mode is RS-485

4.3.3 F81866 H/W Monitor

The **F81866 H/W Monitor** menu (**BIOS Menu 6**) contains the fan configuration submenus and displays operating temperature, fan speeds and system voltages.

```
Aptio Setup Utility – Copyright (C) 2017 American Megatrends, Inc.
Advanced

PC Health Status                                  Smart Fan Mode Select

CPU temperature                  :+32 °C
System temperature               :+32 °C

CPU_CORE                         :+0.880 V
+5V                              :+5.045 V        ---------------------
+12V                             :+12.056 V       ←→: Select Screen
+DDR                             :1.184 V         ↑ ↓: Select Item
+3.3V                            :+3.296 V        EnterSelect
+3.3VSB                          :+3.280 V        + -   Change Opt.
+5VSB                            :+4.968 V        F1    General Help
                                                  F2    Previous Values
                                                  F3    Optimized Defaults
                                                  F4    Save & Exit
                                                  ESC   Exit
Version 2.17.1255. Copyright (C) 2017 American Megatrends, Inc.
```

BIOS Menu 6: F81866 H/W Monitor

➔ **PC Health Status**

The following system parameters and values are shown. The system parameters that are monitored are:

- System Temperatures:
  - CPU Temperature

- System temperature
- Voltages
  - CPU_CORE
  - +5V
  - +12V
  - +DDR
  - +3.3V
  - +3.3VSB
  - +5VSB

4.3.4 RTC Wake Settings

The **RTC Wake Settings** menu (**BIOS Menu 7**) configures RTC wake event.

```
Aptio Setup Utility – Copyright (C) 2017 American Megatrends, Inc.
Advanced

Wake system with Fixed Time      [Disabled]

Enable or disable System
wake on alarm event. When
enabled, System will
wake on the
date::hr::min::sec
specified

----------------------

←→: Select Screen
↑ ↓: Select Item
EnterSelect
F1   General Help
F2   Previous Values
F3   Optimized Defaults
F4   Save
ESC  Exit
Version 2.17.1255. Copyright (C) 2017 American Megatrends, Inc.
```

BIOS Menu 7: RTC Wake Settings

➔ **Wake system with Fixed Time [Disabled]**

Use the **Wake system with Fixed Time** option to enable or disable the system wake on alarm event.

➔ **Disabled** **DEFAULT** The real time clock (RTC) cannot generate a wake

event

➔ **Enabled** — If selected, the **Wake up every day** option appears allowing you to enable to disable the system to wake every day at the specified time. Besides, the following options appear with values that can be selected:

- Wake up date
- Wake up hour
- Wake up minute
- Wake up second

After setting the alarm, the computer turns itself on from a suspend state when the alarm goes off.

4.3.5 Serial Port Console Redirection

The **Serial Port Console Redirection** menu (**BIOS Menu 8**) allows the console redirection options to be configured. Console redirection allows users to maintain a system remotely by re-directing keyboard input and text output through the serial port.

```
Aptio Setup Utility – Copyright (C) 2017 American Megatrends, Inc.
Advanced

 COM1                                          Console Redirection
 Console Redirection          [Disabled]       Enable or Disable
> Console Redirection Settings

 COM2
 Console Redirection          [Disabled]       --------------------
> Console Redirection Settings                  ←→: Select Screen
                                                ↑ ↓: Select Item
 Legacy Console Redirection                     EnterSelect
> Legacy Console Redirection Settings           F1   General Help
                                                F2   Previous Values
                                                F3    Optimized
                                                Defaults
                                                F4    Save
                                                ESC   Exit
Version 2.17.1255. Copyright (C) 2017 American Megatrends, Inc.
```

BIOS Menu 8: Serial Port Console Redirection

➔ **Console Redirection [Disabled]**

Use **Console Redirection** option to enable or disable the console redirection function.

➔ **Disabled**	**DEFAULT**	Disabled the console redirection function
➔ **Enabled**		Enabled the console redirection function

4.3.5.1 Legacy Console Redirection Settings

The **Legacy Console Redirection Settings** menu (**BIOS Menu 9**) allows the legacy console redirection options to be configured.

```
Aptio Setup Utility – Copyright (C) 2017 American Megatrends, Inc.
Advanced

Legacy Serial Redirection Port   [COM1]

Select a COM port to
display redirection of
Legacy OS and Legacy
OPROM Messages

---------------------
←→: Select Screen
↑ ↓: Select Item
EnterSelect
F1   General Help
F2   Previous Values
F3    Optimized
Defaults
F4    Save
ESC   Exit

Version 2.17.1255. Copyright (C) 2017 American Megatrends, Inc.
```

BIOS Menu 9: Legacy Console Redirection Settings

➔ **Legacy Serial Redirection Port [COM1]**

Use the **Legacy Serial Redirection Port** option to specify a COM port to display redirection of legacy OS and legacy OPROM messages. The options include:

- COM1 **DEFAULT**
- COM2
- COM3 (Pci Bus0, Dev0, Func0) (Disabled)

4.3.5.2 Console Redirection Settings

The **Console Redirection Settings** menu (**BIOS Menu 10**) allows the console redirection options to be configured. The option is active when Console Redirection option is enabled.

```
Aptio Setup Utility – Copyright (C) 2017 American Megatrends, Inc.
Advanced

COM1                                          Emulation: ANSI:
Console Redirection Settings                  Extended ASCII char set.
                                              VT100: ASCII char set.
Terminal Type                  [ANSI]         VT100+: Extends VT100 to
Bits per second                [115200]       support color, function
Data Bits                      [8]            keys, etc. VT-UTF8: Uses
Parity                         [None]         UTF8 encoding to map
Stop Bits                      [1]            Unicode chars onto 1 or
                                              more bytes.

                                              ---------------------
                                              ←→: Select Screen
                                              ↑ ↓: Select Item
                                              EnterSelect
                                              F1   General Help
                                              F2   Previous Values
                                              F3    Optimized
                                              Defaults
                                              F4    Save
                                              ESC   Exit

Version 2.17.1255. Copyright (C) 2017 American Megatrends, Inc.
```

BIOS Menu 10: Console Redirection Settings

➔ **Terminal Type [ANSI]**

Use the **Terminal Type** option to specify the remote terminal type.

➔ **VT100**		The target terminal type is VT100
➔ **VT100+**		The target terminal type is VT100+
➔ **VT-UTF8**		The target terminal type is VT-UTF8
➔ **ANSI**	**DEFAULT**	The target terminal type is ANSI

➔ **Bits per second [115200]**

Use the **Bits per second** option to specify the serial port transmission speed. The speed must match the other side. Long or noisy lines may require lower speeds.

➔ **9600**		Sets the serial port transmission speed at 9600.
➔ **19200**		Sets the serial port transmission speed at 19200.
➔ **57600**		Sets the serial port transmission speed at 57600.
➔ **115200**	**DEFAULT**	Sets the serial port transmission speed at 115200.

➔ **Data Bits [8]**

Use the **Data Bits** option to specify the number of data bits.

➔ **7**		Sets the data bits at 7.
➔ **8**	**DEFAULT**	Sets the data bits at 8.

➔ **Parity [None]**

Use the **Parity** option to specify the parity bit that can be sent with the data bits for detecting the transmission errors.

➔ **None**	**DEFAULT**	No parity bit is sent with the data bits.
➔ **Even**		The parity bit is 0 if the number of ones in the data bits is even.
➔ **Odd**		The parity bit is 0 if the number of ones in the data bits is odd.
➔ **Mark**		The parity bit is always 1. This option does not provide error detection.
➔ **Space**		The parity bit is always 0. This option does not provide error detection.

➔ **Stop Bits [1]**

Use the **Stop Bits** option to specify the number of stop bits used to indicate the end of a serial data packet. Communication with slow devices may require more than 1 stop bit.

➔	**1**	**DEFAULT**	Sets the number of stop bits at 1.
➔	**2**		Sets the number of stop bits at 2.

4.3.6 CPU Configuration

Use the **CPU Configuration** menu (**BIOS Menu 11**) to view detailed CPU specifications and configure the CPU.

```
Aptio Setup Utility – Copyright (C) 2017 American Megatrends, Inc.
Advanced

CPU Configuration                                  Enabled for Windows XP
                                                   and Linux (OS optimized
Intel(R) Core(TM) i5-6300U CPU @ 2.40GHz           for Hyper-Threading
CPU Signature                    406E3             Technology) and Disabled
Microcode Patch                  7C                for other OS (OS not
Max CPU Speed                    2400 MHz          optimized for
Min CPU Speed                    400 MHz           Hyper-Threading
CPU Speed                        2300 MHz          Technology). When
Processor Cores                  2                 Disabled only one thread
Hyper Threading Technology       Supported         per enabled core is
Intel VT-x Technology            Supported         enabled.
Intel SMX Technology             Supported
64-bit                           Supported
EIST Technology                  Supported

L1 Data Cache                    32 KB x 2         ----------------------
L1 Code Cache                    32 KB x 2
L2 Cache                         256 KB x 2        ←→: Select Screen
L3 Cache                         3 MB              ↑ ↓: Select Item
                                                   EnterSelect
Hyper-Threading                  [Enabled]         F1   General Help
Active Processor Cores           [All]             F2   Previous Values
Intel Virtualization Technology  [Disabled]        F3    Optimized
Intel(R) SpeedStep(tm)           [Enabled]         Defaults
CPU C states                     [Disabled]        F4    Save
                                                   ESC   Exit
Version 2.17.1255. Copyright (C) 2017 American Megatrends, Inc.
```

BIOS Menu 11: CPU Configuration

➔ **Hyper Threading Function [Enabled]**

Use the Hyper Threading function to enable or disable the CPU hyper threading function.

➔ **Disabled**		Disables the use of hyper threading technology
➔ **Enabled**	**DEFAULT**	Enables the use of hyper threading technology

➔ **Active Processor Cores [All]**

Use the **Active Processor Cores** BIOS option to enable numbers of cores in the processor package.

➔ **All**	**DEFAULT**	Enable all cores in the processor package.
➔ **1**		Enable one core in the processor package.

➔ **Intel® Virtualization Technology [Disabled]**

Use the **Intel® Virtualization Technology** option to enable or disable virtualization on the system. When combined with third party software, Intel® Virtualization technology allows several OSs to run on the same system at the same time.

➔ **Disabled**	**DEFAULT**	Disables Intel® Virtualization Technology.
➔ **Enabled**		Enables Intel® Virtualization Technology.

➔ **Intel® SpeedStep™ [Enabled]**

Use the **Intel® SpeedStep™** option to enable or disable the Intel® SpeedStep Technology.

➔ **Disabled**		Disables the Intel® SpeedStep Technology.
➔ **Enabled**	**DEFAULT**	Enables the Intel® SpeedStep Technology.

➔ **CPU C State [Disabled]**

Use the **CPU C State** option to enable or disable CPU C state.

➔ **Disabled**	**DEFAULT**	Disables CPU C state.
➔ **Enabled**		Enables CPU C state.

4.3.7 SATA Configuration

Use the **SATA Configuration** menu (**BIOS Menu 12**) to change and/or set the configuration of the SATA devices installed in the system.

```
Aptio Setup Utility – Copyright (C) 2017 American Megatrends, Inc.
Advanced

STAT Controller(s)              [Enabled]          Enable or disable SATA
SATA Mode Selection             [AHCI]             Device

SATA1                           Empty
  Hot Plug                      [Disabled]         ---------------------
mSATA(M_SATA1)                  Empty
  Hot Plug                      [Disabled]         ←→: Select Screen
mSATA(M_2_BKEY1)                Empty              ↑ ↓: Select Item
  Hot Plug                      [Disabled]         EnterSelect
                                                   F1   General Help
                                                   F2   Previous Values
                                                   F3    Optimized
                                                   Defaults
                                                   F4    Save
                                                   ESC   Exit
Version 2.17.1255. Copyright (C) 2017 American Megatrends, Inc.
```

BIOS Menu 12: SATA Configuration

➔ **STAT Controller(s) [Enabled]**

Use the **STAT Controller(s)** option to enable or disable the SATA device.

➔ **Enabled**	**DEFAULT**	Enables the SATA device.
➔ **Disabled**		Disables the SATA device.

➔ **SATA Mode Selection [AHCI]**

Use the **SATA Mode Selection** option to configure SATA devices as AHCI devices.

➔ **AHCI**	**DEFAULT**	Configures SATA devices as AHCI device.
➔ **RAID**		Configures SATA devices as RAID device.

NOTE:

Before accessing the RAID configuration utility, ensure to set the **Option ROM Messages** BIOS option in the **Boot** menu to **Force BIOS**. This is to allow the "Press <CTRL+I> to enter Configuration Utility……" message to appear during POST. Press Ctrl+I when prompted to enter the RAID configuration utility.

➔ **Hot Plug [Disabled]**

Use the **Hot Plug** option to enable or disable the SATA device hot plug.

➔ **Disabled**	**DEFAULT**	Disables the SATA device hot plug.
➔ **Enabled**		Enables the SATA device hot plug

4.3.8 USB Configuration

Use the **USB Configuration** menu (**BIOS Menu 13**) to read USB configuration information and configure the USB settings.

```
Aptio Setup Utility – Copyright (C) 2017 American Megatrends, Inc.
Advanced

USB Configuration                                   Enables Legacy USB
                                                    support. AUTO option
USB Controllers:                                    disables legacy support
      1 XHCI                                        if no USB devices are
USB Devices:                                        connected. DISABLE
      1 Keyboard, 1 Mouse, 1 Point                  option will keep USB
                                                    devices available only
Legacy USB Support              [Enabled]           for EFI applications.

                                                    ---------------------
                                                    ←→: Select Screen
                                                    ↑ ↓: Select Item
                                                    EnterSelect
                                                    F1   General Help
                                                    F2   Previous Values
                                                    F3    Optimized
                                                    Defaults
                                                    F4    Save
                                                    ESC   Exit
Version 2.17.1255. Copyright (C) 2017 American Megatrends, Inc.
```

BIOS Menu 13: USB Configuration

➔ **USB Devices**

The **USB Devices Enabled** field lists the USB devices that are enabled on the system

➔ **Legacy USB Support [Enabled]**

Use the **Legacy USB Support** BIOS option to enable USB mouse and USB keyboard support. Normally if this option is not enabled, any attached USB mouse or USB keyboard does not become available until a USB compatible operating system is fully booted with all USB drivers loaded. When this option is enabled, any attached USB mouse or USB keyboard can control the system even when there is no USB driver loaded onto the system.

- ➔ **Enabled** **DEFAULT** Legacy USB support enabled
- ➔ **Disabled** Legacy USB support disabled
- ➔ **Auto** Legacy USB support disabled if no USB devices are connected

4.3.9 IEI Feature

Use the **IEI Feature** menu (**BIOS Menu 14**) to configure One Key Recovery function.

```
Aptio Setup Utility – Copyright (C) 2017 American Megatrends, Inc.
Advanced

iEi Feature                                   Auto Recovery Function
                                              Reboot and recover
Auto Recovery Function          [Disabled]    system automatically
                                              within 10 min, when OS
                                              crashes. Please install
                                              Auto Recovery API
                                              service before enabling
                                              this function

                                              ----------------------

                                              ←→: Select Screen
                                              ↑ ↓: Select Item
                                              EnterSelect
                                              F1   General Help
                                              F2   Previous Values
                                              F3   Optimized Defaults
                                              F4   Save
                                              ESC  Exit
Version 2.17.1255. Copyright (C) 2017 American Megatrends, Inc.
```

BIOS Menu 14: IEI Feature

➔ **Auto Recovery Function [Disabled]**

Use the **Auto Recovery Function** BIOS option to enable or disable the auto recovery function of the IEI One Key Recovery.

- ➔ **Disabled** **DEFAULT** Auto recovery function disabled
- ➔ **Enabled** Auto recovery function enabled

4.4 Chipset

Use the **Chipset** menu (**BIOS Menu 15**) to configure the system chipset.

```
      Aptio Setup Utility – Copyright (C) 2017 American Megatrends, Inc.
  Main    Advanced  Chipset  Security    Boot    Save & Exit

> System Agent (SA) Configuration                System Agent (SA)
> PCH-IO Configuration                           Parameters

                                                 ---------------------
                                                 ←→: Select Screen
                                                 ↑ ↓: Select Item
                                                 EnterSelect
                                                 + -   Change Opt.
                                                 F1    General Help
                                                 F2    Previous Values
                                                 F3    Optimized Defaults
                                                 F4    Save & Exit
                                                 ESC   Exit

        Version 2.17.1255. Copyright (C) 2017 American Megatrends, Inc.
```

BIOS Menu 15: Chipset

4.4.1 System Agent (SA) Configuration

Use the **System Agent (SA) Configuration** menu (**BIOS Menu 16**) to configure the System Agent (SA) parameters.

```
      Aptio Setup Utility – Copyright (C) 2017 American Megatrends, Inc.
                      Chipset

VT-d                                [Disabled]   VT-d capability

> Graphics Configuration                         ---------------------
> Memory Configuration                           ←→: Select Screen
                                                 ↑ ↓: Select Item
                                                 EnterSelect
                                                 + -   Change Opt.
                                                 F1    General Help
                                                 F2    Previous Values
                                                 F3    Optimized Defaults
                                                 F4    Save & Exit
                                                 ESC   Exit

        Version 2.17.1255. Copyright (C) 2017 American Megatrends, Inc.
```

BIOS Menu 16: System Agent (SA) Configuration

➔ **VT-d [Disabled]**

Use the **VT-d** option to enable or disable VT-d support.

➔ **Disabled** **DEFAULT** Disable VT-d support.

➔ **Enabled** Enable VT-d support.

4.4.1.1 Graphics Configuration

Use the **Graphics Configuration** menu (**BIOS Menu 17**) to configure the graphics settings.

```
Aptio Setup Utility – Copyright (C) 2017 American Megatrends, Inc.
                    Chipset

Graphics Configuration                          Select which of
                                                Auto/IGFX/PCIE Graphics
Primary Display                  [Auto]         device should be Primary
Internal Graphics                [Enabled]      Display Or select SG for
DVMT Pre-Allocated               [256M]         Switchable Gfx.
DVMT Total Gfx Mem               [MAX]
> LCD Control                                   ---------------------
                                                ←→: Select Screen
                                                ↑ ↓: Select Item
                                                EnterSelect
                                                + -   Change Opt.
                                                F1    General Help
                                                F2    Previous Values
                                                F3    Optimized Defaults
                                                F4    Save & Exit
                                                ESC   Exit
Version 2.17.1255. Copyright (C) 2017 American Megatrends, Inc.
```

BIOS Menu 17: Graphics Configuration

➔ **Primary Display [Auto]**

Use the **Primary Display** option to select the graphics controller used as the primary boot device. Configuration options are listed below:

- Auto **DEFAULT**
- IGFX
- PCIE

➔ **Internal Graphics [Enabled]**

Use the **Internal Graphics** option to enable or disable the internal graphics device.

➔ **Auto**		The internal graphics device is automatically detected and enabled.
➔ **Disabled**		Disable the internal graphics device.
➔ **Enabled**	**DEFAULT**	Enable the internal graphics device. The following options/submenu appear with values that can be selected: DVMT Pre-Allocated DVMT Total Gfx Mem LCD Control

➔ **DVMT Pre-Allocated [256M]**

Use the **DVMT Pre-Allocated** option to set the amount of system memory allocated to the integrated graphics processor when the system boots. The system memory allocated can then only be used as graphics memory, and is no longer available to applications or the operating system. Configuration options are listed below:

- 32M
- 64M
- 128M
- 256M **DEFAULT**
- 512M

➔ **DVMT Total Gfx Mem [MAX]**

Use the **DVMT Total Gfx Mem** option to select DVMT 5.0 total graphic memory size used by the internal graphics device. The following options are available:

- 128M
- 256M
- MAX **DEFAULT**

4.4.1.1.1 LCD Control

Use the **LCD Control** submenu (**BIOS Menu 18**) to select a display device which will be activated during POST.

```
Aptio Setup Utility – Copyright (C) 2017 American Megatrends, Inc.
                    Chipset

LCD Control                                        Select the Video Device
                                                   which will be activated
Primary IGFX Boot Display        [VBIOS Default]   during POST. This has no
                                                   effect if external
                                                   graphics present.
                                                   Secondary boot display
                                                   selection will appear
                                                   based on your selection.
                                                   VGA modes will be
                                                   supported only on
                                                   primary display.

                                                   ---------------------
                                                   ←→: Select Screen
                                                   ↑ ↓: Select Item
                                                   EnterSelect
                                                   +/-:  Change Opt.
                                                   F1:   General Help
                                                   F2:   Previous Values
                                                   F3:   Optimized Defaults
                                                   F4:   Save & Exit
                                                   ESC:  Exit
Version 2.17.1255. Copyright (C) 2017 American Megatrends, Inc.
```

BIOS Menu 18: LCD Control

➔ **Primary IGFX Boot Display [VBIOS Default]**

Use the **Primary IGFX Boot Display** option to select the display device used by the system when it boots.

- VBIOS Default **DEFAULT**
- DP1
- LVDS

4.4.1.2 Memory Configuration

Use the **Memory Configuration** submenu (**BIOS Menu 19**) to display the memory information.

```
Aptio Setup Utility – Copyright (C) 2017 American Megatrends, Inc.
                    Chipset

Memory Information

Total Memory                    4096 MB
DIMM1                           Not Present
DIMM2                           4096 MB

                                          ---------------------
                                          ←→: Select Screen
                                          ↑ ↓: Select Item
                                          EnterSelect
                                          + -   Change Opt.
                                          F1    General Help
                                          F2    Previous Values
                                          F3    Optimized Defaults
                                          F4    Save & Exit
                                          ESC   Exit

Version 2.17.1255. Copyright (C) 2017 American Megatrends, Inc.
```

BIOS Menu 19: Memory Configuration

4.4.2 PCH-IO Configuration

Use the **PCH-IO Configuration** menu (**BIOS Menu 20**) to configure the PCH-IO chipset.

```
Aptio Setup Utility – Copyright (C) 2017 American Megatrends, Inc.
                    Chipset

Auto Power Button Status        [Disable (ATX)]     Select AC power state when
                                                    power is re-applied after
Restore AC Power Loss           [Last State]        a power failure.

> PCI Express Configuration                         ---------------------
                                                    ←→: Select Screen
                                                    ↑ ↓: Select Item
                                                    EnterSelect
                                                    + -   Change Opt.
                                                    F1    General Help
                                                    F2    Previous Values
                                                    F3    Optimized Defaults
                                                    F4    Save & Exit
                                                    ESC   Exit
Version 2.17.1255. Copyright (C) 2017 American Megatrends, Inc.
```

BIOS Menu 20: PCH-IO Configuration

➔ **Restore AC Power Loss [Last State]**

Use the **Restore AC Power** BIOS option to specify what state the system returns to if there is a sudden loss of power to the system.

➔ **Power Off**		The system remains turned off
➔ **Power On**		The system turns on
➔ **Last State**	**DEFAULT**	The system returns to its previous state. If it was on, it turns itself on. If it was off, it remains off.

4.4.2.1 PCI Express Configuration

Use the **PCI Express Configuration** submenu (**BIOS Menu 21**) to configure the PCI Express slots.

```
Aptio Setup Utility – Copyright (C) 2017 American Megatrends, Inc.
                    Chipset

PCI Express Configuration                    M_2_BKEY1 Settings.

> M_2_BKEY1
> M_PCIE1                                    ---------------------
                                             ←→: Select Screen
                                             ↑ ↓: Select Item
                                             EnterSelect
                                             + -   Change Opt.
                                             F1    General Help
                                             F2    Previous Values
                                             F3    Optimized Defaults
                                             F4    Save & Exit
                                             ESC   Exit

Version 2.17.1255. Copyright (C) 2017 American Megatrends, Inc.
```

BIOS Menu 21: PCI Express Configuration

The PCIe slot submenus all contain the following options:

➔ **PCIe Speed [Auto]**

Use the **PCIe Speed** option to configure the PCIe interface speed.

- Auto **DEFAULT**
- Gen 1

- Gen 2
- Gen 3

➔ **Detect Non-Compliance Device [Disabled]**

Use the **Detect Non-Compliance Device** option to enable or disable detecting if a non-compliance PCI Express device is connected to the PCI Express slot.

➔ **Disabled**	**DEFAULT**	Disables to detect if a non-compliance PCI Express device is connected to the PCI Express slot.
➔ **Enabled**		Enables to detect if a non-compliance PCI Express device is connected to the PCI Express slot.

4.5 Security

Use the **Security** menu (**BIOS Menu 22**) to set system and user passwords.

```
      Aptio Setup Utility – Copyright (C) 2017 American Megatrends, Inc.
  Main    Advanced   Chipset   Security    Boot    Save & Exit

Password Description                                  Set Administrator
                                                      Password
If ONLY the Administrator's password is set,
then this only limits access to Setup and is
only asked for when entering Setup                    ---------------------
If ONLY the User's password is set, then this         ←→: Select Screen
is a power on password and must be entered to         ↑ ↓: Select Item
boot or enter Setup. In Setup the User will           EnterSelect
have Administrator rights.                            F1   General Help
The password length must be:                          F2   Previous Values
Minimum length                  3                     F3    Optimized
Maximum length                  20                    Defaults
                                                      F4    Save
Administrator Password                                ESC   Exit
User Password

        Version 2.17.1255. Copyright (C) 2017 American Megatrends, Inc.
```

BIOS Menu 22: Security

➔ **Administrator Password**

Use the **Administrator Password** to set or change a administrator password.

➔ **User Password**

Use the **User Password** to set or change a user password.

4.6 Boot

Use the **Boot** menu (**BIOS Menu 23**) to configure system boot options.

```
      Aptio Setup Utility – Copyright (C) 2017 American Megatrends, Inc.
  Main    Advanced   Chipset   Security   Boot    Save & Exit

Boot Configuration                                  Select the keyboard
Bootup NumLock State            [On]                NumLock state
Quiet Boot                      [Enabled]
UEFI Boot                       [Disabled]

                                                    ---------------------
Driver Option Priorities                            ←→: Select Screen
Launch PXE OpROM                [Disabled]          ↑ ↓: Select Item
Option ROM Messages             [Force BIOS]        Enter Select
                                                    F1   General Help
Boot Option Priorities                              F2   Previous Values
                                                    F3   Optimized Defaults
                                                    F4   Save
                                                    ESC  Exit

       Version 2.17.1255. Copyright (C) 2017 American Megatrends, Inc.
```

BIOS Menu 23: Boot

➔ **Bootup NumLock State [On]**

Use the **Bootup NumLock State** BIOS option to specify if the number lock setting must be modified during boot up.

➔ **On** **DEFAULT** Allows the Number Lock on the keyboard to be enabled automatically when the computer system boots up. This allows the immediate use of the 10-key numeric keypad located on the right side of the keyboard. To confirm this, the Number Lock LED light on the keyboard is lit.

➔ **Off** Does not enable the keyboard Number Lock automatically. To use the 10-keys on the keyboard, press the Number Lock key located on the upper left-hand corner of the 10-key pad. The Number Lock LED on the keyboard lights up when the Number Lock is engaged.

➔ **Quiet Boot [Enabled]**

Use the **Quiet Boot** BIOS option to select the screen display when the system boots.

➔ **Disabled** Normal POST messages displayed

➔ **Enabled** **DEFAULT** OEM Logo displayed instead of POST messages

➔ **UEFI Boot [Disabled]**

Use the **UEFI Boot** option to enable or disable to boot from the UEFI devices.

➔ **Enabled** Boot from UEFI devices is enabled.

➔ **Disabled** **DEFAULT** Boot from UEFI devices is disabled.

➔ **Launch PXE OpROM [Disabled]**

Use the **Launch PXE OpROM** option to enable or disable boot option for legacy network devices.

➔ **Disabled** **DEFAULT** Ignore all PXE Option ROMs

➔ **Enabled** Load PXE Option ROMs.

➔ **Option ROM Messages [Force BIOS]**

Use the **Option ROM Messages** option to set the Option ROM display mode.

➔ **Force BIOS** **DEFAULT** Sets display mode to force BIOS.

➔ **Keep Current** Sets display mode to current.

➔ **Boot Option Priority**

Use the **Boot Option Priority** function to set the system boot sequence from the available devices. The drive sequence also depends on the boot sequence in the individual device section.

4.7 Exit

Use the **Exit** menu (**BIOS Menu 24**) to load default BIOS values, optimal failsafe values and to save configuration changes.

```
     Aptio Setup Utility – Copyright (C) 2017 American Megatrends, Inc.
 Main    Advanced   Chipset   Security    Boot    Save & Exit

 Save Changes and Reset                          Reset the system after
 Discard Changes and Reset                       saving the changes.

 Restore Defaults
 Save as User Defaults
 Restore User Defaults

                                                 ---------------------
                                                 ←→: Select Screen
                                                 ↑ ↓: Select Item
                                                 EnterSelect
                                                 F1   General Help
                                                 F2   Previous Values
                                                 F3    Optimized
                                                 Defaults
                                                 F4    Save
                                                 ESC   Exit
      Version 2.17.1255. Copyright (C) 2017 American Megatrends, Inc.
```

BIOS Menu 24: Exit

➔ **Save Changes and Reset**

Use the **Save Changes and Reset** option to save the changes made to the BIOS options and to exit the BIOS configuration setup program.

➔ **Discard Changes and Reset**

Use the **Discard Changes and Reset** option to exit the system without saving the changes made to the BIOS configuration setup program.

➔ **Restore Defaults**

Use the **Restore Defaults** option to load the optimal default values for each of the parameters on the Setup menus. **F3 key can be used for this operation.**

➔ **Save as User Defaults**

Use the **Save as User Defaults** option to save the changes done so far as user defaults.

➔ **Restore User Defaults**

Use the **Restore User Defaults** option to restore the user defaults to all the setup options.

Appendix

A

Regulatory Compliance

DECLARATION OF CONFORMITY

This equipment is in conformity with the following EU directives:

- EMC Directive (2004/108/EC, 2014/30/EU)
- Low-Voltage Directive (2006/95/EC, 2014/35/EU)
- RoHS II Directive (2011/65/EU, 2015/863/EU)

If the user modifies and/or install other devices in the equipment, the CE conformity declaration may no longer apply.

If this equipment has telecommunications functionality, it also complies with the requirements of the Radio Equipment Directive 2014/53/EU.

English IEI Integration Corp declares that this equipment is in compliance with the essential requirements and other relevant provisions of Directive 2014/53/EU.
Български [Bulgarian] IEI Integration Corp. декларира, че този оборудване е в съответствие със съществените изисквания и другите приложими правила на Директива 2014/53/EU.
Česky [Czech] IEI Integration Corp tímto prohlašuje, že tento zařízení je ve shodě se základními požadavky a dalšími příslušnými ustanoveními směrnice 2014/53/EU.
Dansk [Danish] IEI Integration Corp erklærer herved, at følgende udstyr overholder de væsentlige krav c øvrige relevante krav i direktiv 2014/53/EU.
Deutsch [German] IEI Integration Corp, erklärt dieses Gerät entspricht den grundlegenden Anforderungen und den weiteren entsprechenden Vorgaben der Richtlinie 2014/53/EU.
Eesti [Estonian] IEI Integration Corp deklareerib seadme seadme vastavust direktiivi 2014/53/EÜ põhinõuetele ja nimetatud direktiivist tulenevatele teistele asjakohastele sätetele.

Español [Spanish] IEI Integration Corp declara que el equipo cumple con los requisitos esenciales y cualesquiera otras disposiciones aplicables o exigibles de la Directiva 2014/53/EU.
Ελληνική [Greek] IEI Integration Corp ΔΗΛΩΝΕΙ ΟΤΙ ΕΞΟΠΛΙΣΜΟΣ ΣΥΜΜΟΡΦΩΝΕΤΑΙ ΠΡΟΣ ΤΙΣ ΟΥΣΙΩΔΕΙΣ ΑΠΑΙΤΗΣΕΙΣ ΚΑΙ ΤΙΣ ΛΟΙΠΕΣ ΣΧΕΤΙΚΕΣ ΔΙΑΤΑΞΕΙΣ ΤΗΣ ΟΔΗΓΙΑΣ 2014/53/EU.
Français [French] IEI Integration Corp déclare que l'appareil est conforme aux exigences essentielles et aux autres dispositions pertinentes de la directive 2014/53/EU.
Italiano [Italian] IEI Integration Corp dichiara che questo apparecchio è conforme ai requisiti essenziali ed alle altre disposizioni pertinenti stabilite dalla direttiva 2014/53/EU.
Latviski [Latvian] IEI Integration Corp deklarē, ka iekārta atbilst būtiskajām prasībām un citiem ar to saistītajiem noteikumiem Direktīvas 2014/53/EU.
Lietuvių [Lithuanian] IEI Integration Corp deklaruoja, kad šis įranga atitinka esminius reikalavimus ir kitas 2014/53/EU Direktyvos nuostatas.
Nederlands [Dutch] IEI Integration Corp dat het toestel toestel in overeenstemming is met de essentiële eisen en de andere relevante bepalingen van richtlijn 2014/53/EU.
Malti [Maltese] IEI Integration Corp jiddikjara li dan prodott jikkonforma mal-ħtiġijiet essenzjali u ma provvedimenti oħrajn relevanti li hemm fid-Dirrettiva 2014/53/EU.
Magyar [Hungarian] IEI Integration Corp nyilatkozom, hogy a berendezés megfelel a vonatkozó alapvetõ követelményeknek és az 2014/53/EU irányelv egyéb elõírásainak.
Polski [Polish] IEI Integration Corp oświadcza, że wyrobu jest zgodny z zasadniczymi wymogami oraz pozostałymi stosownymi postanowieniami Dyrektywy 2014/53/EU.
Português [Portuguese] IEI Integration Corp declara que este equipamento está conforme com os requisitos essenciais e outras disposições da Directiva 2014/53/EU.

Româna [Romanian] IEI Integration Corp declară că acest echipament este in conformitate cu cerinţele esenţiale şi cu celelalte prevederi relevante ale Directivei 2014/53/EU.
Slovensko [Slovenian] IEI Integration Corp izjavlja, da je ta opreme v skladu z bistvenimi zahtevami in ostalimi relevantnimi določili direktive 2014/53/EU.
Slovensky [Slovak] IEI Integration Corp týmto vyhlasuje, že zariadenia spĺňa základné požiadavky a všetky príslušné ustanovenia Smernice 2014/53/EU.
Suomi [Finnish] IEI Integration Corp vakuuttaa täten että laitteet on direktiivin 2014/53/EU oleellisten vaatimusten ja sitä koskevien direktiivin muiden ehtojen mukainen.
Svenska [Swedish] IEI Integration Corp förklarar att denna utrustningstyp står I överensstämmelse med de väsentliga egenskapskrav och övriga relevanta bestämmelser som framgår av direktiv 2014/53/EU.

FCC WARNING

This equipment complies with Part 15 of the FCC Rules. Operation is subject to the following two conditions:

- This device may not cause harmful interference, and
- This device must accept any interference received, including interference that may cause undesired operation.

This equipment has been tested and found to comply with the limits for a Class A digital device, pursuant to part 15 of the FCC Rules. These limits are designed to provide reasonable protection against harmful interference when the equipment is operated in a commercial environment. This equipment generates, uses, and can radiate radio frequency energy and, if not installed and used in accordance with the instruction manual, may cause harmful interference to radio communications. Operation of this equipment in a residential area is likely to cause harmful interference in which case the user will be required to correct the interference at his own expense.

Federal Communication Commission Interference Statement

This equipment has been assembled with components that comply with the limits for a Class B digital device, pursuant to Part 15 of the FCC Rules. These limits are designed to provide reasonable protection against harmful interference in a residential installation. This equipment generates, uses and can radiate radio frequency energy and, if not installed and used in accordance with the instructions, may cause harmful interference to radio communications. However, there is no guarantee that interference will not occur in a particular installation. If this equipment does cause harmful interference to radio or television reception, which can be determined by turning the equipment off and on, the user is encouraged to try to correct the interference by one of the following measures:

- Reorient or relocate the receiving antenna.
- Increase the separation between the equipment and receiver.
- Connect the equipment into an outlet on a circuit different from that to which the receiver is connected.
- Consult the dealer or an experienced radio/TV technician for help.

CHINA ROHS

The label on the product indicates the estimated “Environmentally Friendly Use Period” (EFUP). This is an estimate of the number of years that these substances would “not leak out or undergo abrupt change.” This product may contain replaceable sub-assemblies/components which have a shorter EFUP such as batteries and lamps. These components will be separately marked.

Appendix

B

Safety Precautions

WARNING:

The precautions outlined in this chapter should be strictly followed. Failure to follow these precautions may result in permanent damage to the INOX-F15C-ULT3.

B.1 Safety Precautions

Please follow the safety precautions outlined in the sections that follow:

B.1.1 General Safety Precautions

Please ensure the following safety precautions are adhered to at all times.

- ***Follow the electrostatic precautions*** outlined below whenever the device is opened.
- ***Make sure the power is turned off and the power cord is disconnected*** whenever the INOX-F15C-ULT3 is being installed, moved or modified.
- ***To prevent the risk of electric shock, make sure power cord is unplugged from wall socket.*** To fully disengage the power to the unit, please disconnect the power cord from the AC outlet. Refer servicing to qualified service personnel. The AC outlet shall be readily available and accessible.
- ***Do not apply voltage levels that exceed the specified voltage range***. Doing so may cause fire and/or an electrical shock. Use a power cord that matches the voltage of the power outlet, which has been approved and complies with the safety standard of your particular country.
- ***Electric shocks can occur*** if the INOX-F15C-ULT3 chassis is opened when it is running. To avoid risk of electric shock, this device must only be connected to a supply mains with protective earth.
- ***Do not drop or insert any objects*** into the ventilation openings of the INOX-F15C-ULT3.

- ***If considerable amounts of dust, water, or fluids enter the* device**, turn off the power supply immediately, unplug the power cord, and contact the INOX-F15C-ULT3 vendor.
- **DO NOT**:
  - Drop the device against a hard surface.
  - Strike or exert excessive force onto the LCD panel.
  - Touch any of the LCD panels with a sharp object
  - In a site where the ambient temperature exceeds the rated temperature

B.1.2 Anti-static Precautions

WARNING:

Failure to take ESD precautions during the installation of the INOX-F15C-ULT3 may result in permanent damage to the INOX-F15C-ULT3 and severe injury to the user.

Electrostatic discharge (ESD) can cause serious damage to electronic components, including the INOX-F15C-ULT3. Dry climates are especially susceptible to ESD. It is therefore critical that whenever the INOX-F15C-ULT3 is opened and any of the electrical components are handled, the following anti-static precautions are strictly adhered to.

- ***Wear an anti-static wristband***: Wearing a simple anti-static wristband can help to prevent ESD from damaging any electrical component.
- ***Self-grounding***: Before handling any electrical component, touch any grounded conducting material. During the time the electrical component is handled, frequently touch any conducting materials that are connected to the ground.
- ***Use an anti-static pad***: When configuring or working with an electrical component, place it on an anti-static pad. This reduces the possibility of ESD damage.
- ***Only handle the edges of the electrical component***: When handling the electrical component, hold the electrical component by its edges.

B.1.3 Product Disposal

CAUTION:

Risk of explosion if battery is replaced by an incorrect type. Only certified engineers should replace the on-board battery.

Dispose of used batteries according to instructions and local regulations.

- Outside the European Union – If you wish to dispose of used electrical and electronic products outside the European Union, please contact your local authority so as to comply with the correct disposal method.
- Within the European Union – The device that produces less waste and is easier to recycle is classified as electronic device in terms of the European Directive 2012/19/EU (WEEE), and must not be disposed of as domestic garbage.

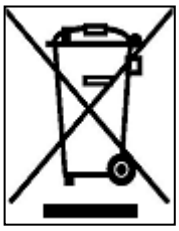

EU-wide legislation, as implemented in each Member State, requires that waste electrical and electronic products carrying the mark (left) must be disposed of separately from normal household waste. This includes monitors and electrical accessories, such as signal cables or power cords. When you need to dispose of your display products, please follow the guidance of your local authority, or ask the shop where you purchased the product. The mark on electrical and electronic products only applies to the current European Union Member States.

Please follow the national guidelines for electrical and electronic product disposal.

B.2 Maintenance and Cleaning Precautions

When maintaining or cleaning the INOX-F15C-ULT3, please follow the guidelines below.

WARNING:

- For safety reasons, turn-off the power and unplug the panel PC before cleaning.
- If you dropped any material or liquid such as water onto the panel PC when cleaning, unplug the power cable immediately and contact your dealer or the nearest service center. Always make sure your hands are dry when unplugging the power cable.

B.2.1 Maintenance and Cleaning

Prior to cleaning any part or component of the INOX-F15C-ULT3, please read the details below.

- Except for the LCD panel, never spray or squirt liquids directly onto any other components. To clean the LCD panel, gently wipe it with a piece of soft dry cloth or a slightly moistened cloth.
- The interior of the device does not require cleaning. Keep fluids away from the device interior.
- Be cautious of all small removable components when vacuuming the device.
- Never drop any objects or liquids through the openings of the device.
- Be cautious of any possible allergic reactions to solvents or chemicals used when cleaning the device.
- Avoid eating, drinking and smoking within vicinity of the device.

B.2.2 Cleaning Tools

Some components in the INOX-F15C-ULT3 may only be cleaned using a product specifically designed for the purpose. In such case, the product will be explicitly mentioned in the cleaning tips. Below is a list of items to use when cleaning the INOX-F15C-ULT3.

- ***Cloth*** – Although paper towels or tissues can be used, a soft, clean piece of cloth is recommended when cleaning the device.

- ***Water or rubbing alcohol*** – A cloth moistened with water or rubbing alcohol can be used to clean the device.
- ***Using solvents*** – The use of solvents is not recommended when cleaning the device as they may damage the plastic parts.
- ***Vacuum cleaner*** – Using a vacuum specifically designed for computers is one of the best methods of cleaning the device. Dust and dirt can restrict the airflow in the device and cause its circuitry to corrode.
- ***Cotton swabs*** – Cotton swaps moistened with rubbing alcohol or water are excellent tools for wiping hard to reach areas.
- **Foam swabs** – Whenever possible, it is best to use lint free swabs such as foam swabs for cleaning.

Appendix

C

BIOS Menu Options

Appendix

D

Watchdog Timer

NOTE:

The following discussion applies to DOS. Contact IEI support or visit the IEI website for drivers for other operating systems.

The Watchdog Timer is a hardware-based timer that attempts to restart the system when it stops working. The system may stop working because of external EMI or software bugs. The Watchdog Timer ensures that standalone systems like ATMs will automatically attempt to restart in the case of system problems.

A BIOS function call (INT 15H) is used to control the Watchdog Timer.

INT 15H:

AH – 6FH Sub-function:	
AL – 2:	Sets the Watchdog Timer's period.
BL:	Time-out value (Its unit-second is dependent on the item "Watchdog Timer unit select" in CMOS setup).

Table D-1: AH-6FH Sub-function

Call sub-function 2 to set the time-out period of Watchdog Timer first. If the time-out value is not zero, the Watchdog Timer starts counting down. When the timer value reaches zero, the system resets. To ensure that this reset condition does not occur, calling sub-function 2 must periodically refresh the Watchdog Timer. However, the watchdog timer is disabled if the time-out value is set to zero.

A tolerance of at least 10% must be maintained to avoid unknown routines within the operating system (DOS), such as disk I/O that can be very time-consuming.

NOTE:

The Watchdog Timer is activated through software. The software application that activates the Watchdog Timer must also deactivate it when closed. If the Watchdog Timer is not deactivated, the system will automatically restart after the Timer has finished its countdown.

EXAMPLE PROGRAM:

```
; INITIAL TIMER PERIOD COUNTER

;
W_LOOP:
;

        MOV         AX, 6F02H           ;setting the time-out value
        MOV         BL, 30              ;time-out value is 48 seconds
        INT     15H

;
; ADD THE APPLICATION PROGRAM HERE
;

        CMP         EXIT_AP, 1          ;is the application over?
        JNE     W_LOOP              ;No, restart the application

        MOV         AX, 6F02H           ;disable Watchdog Timer
        MOV         BL, 0           ;
        INT     15H

;
; EXIT ;
```

Appendix

E

Hazardous Materials Disclosure

The details provided in this appendix are to ensure that the product is compliant with the Peoples Republic of China (China) RoHS standards. The table below acknowledges the presences of small quantities of certain materials in the product, and is applicable to China RoHS only.

A label will be placed on each product to indicate the estimated "Environmentally Friendly Use Period" (EFUP). This is an estimate of the number of years that these substances would "not leak out or undergo abrupt change." This product may contain replaceable sub-assemblies/components which have a shorter EFUP such as batteries and lamps. These components will be separately marked.

Please refer to the following table.

Part Name	Toxic or Hazardous Substances and Elements					
	Lead (Pb)	Mercury (Hg)	Cadmium (Cd)	Hexavalent Chromium (CR(VI))	Polybrominated Biphenyls (PBB)	Polybrominated Diphenyl Ethers (PBDE)
Housing	O	O	O	O	O	O
Display	O	O	O	O	O	O
Printed Circuit Board	O	O	O	O	O	O
Metal Fasteners	O	O	O	O	O	O
Cable Assembly	O	O	O	O	O	O
Fan Assembly	O	O	O	O	O	O
Power Supply Assemblies	O	O	O	O	O	O
Battery	O	O	O	O	O	O

O: This toxic or hazardous substance is contained in all of the homogeneous materials for the part is below the limit requirement in SJ/T11363-2006 (now replaced by GB/T 26572-2011).

X: This toxic or hazardous substance is contained in at least one of the homogeneous materials for this part is above the limit requirement in SJ/T11363-2006 (now replaced by GB/T 26572-2011).

此附件旨在确保本产品符合中国 RoHS 标准。以下表格标示此产品中某有毒物质的含量符合中国 RoHS 标准规定的限量要求。

本产品上会附有"环境友好使用期限"的标签，此期限是估算这些物质"不会有泄漏或突变"的年限。本产品可能包含有较短的环境友好使用期限的可替换元件，像是电池或灯管，这些元件将会单独标示出来。

部件名称	有毒有害物质或元素					
	铅 (Pb)	汞 (Hg)	镉 (Cd)	六价铬 (CR(VI))	多溴联苯 (PBB)	多溴二苯醚 (PBDE)
壳体	O	O	O	O	O	O
显示	O	O	O	O	O	O
印刷电路板	O	O	O	O	O	O
金属螺帽	O	O	O	O	O	O
电缆组装	O	O	O	O	O	O
风扇组装	O	O	O	O	O	O
电力供应组装	O	O	O	O	O	O
电池	O	O	O	O	O	O

O: 表示该有毒有害物质在该部件所有物质材料中的含量均在 SJ/T 11363-2006 (现由 GB/T 26572-2011 取代) 标准规定的限量要求以下。

X: 表示该有毒有害物质至少在该部件的某一均质材料中的含量超出 SJ/T 11363-2006 (现由 GB/T 26572-2011 取代) 标准规定的限量要求。