IEI Integration Corp.

MODEL:

IDS-300-BW

Fanless Digital Signage Player with Intel® Celeron® N3160, Three HDMI, Dual GbE LAN, Dual RS-232, SATA 6Gb/s, Audio Jacks, USB 3.0, RoHS Compliant

User Manual

Rev. 1.00 – November 28, 2016

RoHS Lead Free

Revision

Date	Version	Changes
November 28, 2016	1.01	Modified HDMI connector descriptions Updated Chapter 4: BIOS
July 20, 2016	1.00	Initial release

Copyright

COPYRIGHT NOTICE

TRADEMARKS

Safety Instructions

en Warning! Read the user manual before connecting the system to the power source.

de Vorsicht! Bitte lesen Sie die Bedienungsanleitung, bevor Sie das System an eine Stromquelle anschließen.

fr Attention! Avant de brancher le système à la source d'alimentation, consultez le mode d'emploi.

it Avvertenza! Consultare il manuale utente prima di collegare il sistema all'alimentatore.

es Atención! Lea atentamente este manual del usuario antes de operar la fuente de alimentación.

zh 警告！在將系統連接到電源之前，請仔細閱讀使用手冊。

cn 警告！在将系统连接到电源之前，请仔细阅读使用手冊。

---

en Warning! To prevent the system from overheating, do not operate it in an area that exceeds the maximum operating temperature described in the user manual.

de Vorsicht! Um eine Überhitzung des Systems zu vermeiden, betreiben Sie es ausschließlich im zulässigen Betriebstemperaturbereich. Dieser ist in der Bedienungsanleitung vermerkt.

fr Attention! Pour éviter la surchauffe du système, ne l'utilisez pas dans une zone dont la température dépasse les limites décrits dans le mode d'emploi.

it Avvertenza! Per evitare che il sistema si surriscaldi, non utilizzarlo in aree che superino la temperatura massima d'esercizio descritta nel manuale utente.

es Atención! Para evitar el excesivo calentamiento del sistema, no opere en las condiciones de temperatura superior a lo recomendado en este manual del usuario.

zh 警告！為防止系統過熱，不要在超過使用手冊上記載的產品工作溫度範圍之外操作此系統。

cn 警告！为防止系统过热，不要在超过使用手冊上记载的产品工作温度范围之外操作此系统。

---

en Warning! Use only the adapter and power cord approved for this system. Use of another type of adapter may risk fire or explosion. Please refer to the user manual for the power adapter specifications.

de Vorsicht! Nur zugelassene Netzteile und Netzkabel dürfen verwendet werden. Die Benutzung von anderen Netzteilen kann einen Brand oder eine Explosion zur Folge haben. Prüfen Sie die jeweiligen Spezifikationen in der Bedienungsanleitung.

fr Attention! Utilisez exclusivement le câble d'alimentation et l'adaptateur homologués pour ce système. L'utilisation d'un autre type d'adaptateur risquerait de provoquer un incendie ou une explosion. Veuillez référer au mode d'emploi pour les spécifications de l'adaptateur d'alimentation.

it Avvertenza! Utilizzare solo l'adattatore e il cavo di alimentazione approvati per questo sistema. L'uso di un altro tipo di adattatore può causare rischio d'incendio o esplosione. Si prega di fare riferimento al manuale utente per le specifiche sull'alimentazione.

es Atención! Utilice solamente el adaptador de corriente alterna (CA) con Marcas Conformidad otorgadas. Cualquier otro adaptador no otorgado aumenta el riesgo de explosión o incendio. Por favor consulte el manual del usuario para las especificaciones del adaptador de alimentación.

zh 警告！只能使用經過認證、適用於本系統的電源變壓器與電源線。使用不適用的電源變壓器將可能導致火災或爆炸。電源變壓器規格請參考使用手冊。

cn 警告！只能使用经过认证，适用于本系统的电源适配器与电源线。使用不适用的电源适配器将可能导致火灾或爆炸。电源适配器规格请参考使用手冊。

---

en Warning! Ultimate disposal of this product should be handled according to all national laws and regulations.

de Vorsicht! Die Entsorgung dieses Produkts sollte gemäß allen Bestimmungen und Gesetzen des Landes erfolgen.

fr Attention! La mise au rebut ou le recyclage de ce produit sont généralement soumis aux lois et/ou directives de respect de l'environnement. Renseignez-vous auprès de l'organisme compétent.

it Avvertenza! Lo smaltimento di questo prodotto deve essere eseguito secondo le leggi e i regolamenti locali.

es Atención! La disposición final de residuos de este producto se debe cumplir con las normativas y leyes del país.

zh 警告！本產品的廢棄處理應根據該國家的法律和規章進行。

cn 警告！本产品的废弃处理应根据该国家的法律和规章进行。

Manual Conventions

WARNING

Warnings appear where overlooked details may cause damage to the equipment or result in personal injury. Warnings should be taken seriously.

CAUTION

Cautionary messages should be heeded to help reduce the chance of losing data or damaging the product.

NOTE

These messages inform the reader of essential but non-critical information. These messages should be read carefully as any directions or instructions contained therein can help avoid making mistakes.

HOT SURFACE

This symbol indicates a hot surface that should not be touched without taking care.

Table of Contents

List of Figures

List of Tables

List of BIOS Menus

Chapter

1

Introduction

1.1 Overview

Figure 1-1: IDS-300-BW Series Digital Signage Player

The IDS-300-BW series is a fanless digital signage player with Intel® Celeron® N3160 SoC. The IDS-300-BW is preinstalled with 4 GB of DDR3L SO-DIMM, and can accommodate up to 8 GB of DDR3L memory. Storage in the system is supported by the 2.5" SATA 6Gb/s HDD/SSD bay and the PCIe Mini card slot for mSATA module.

The IDS-300-BW includes three HDMI outputs supporting up to 3840 x 2160 resolution. Other slots and connectors include full-size/half-size PCIe Mini card slots, RS-232, GbE ports, USB 3.0 ports, and audio (line-in, line-out and mic-in).

1.2 Features

The IDS-300-BW has the following features

- Fanless design
- Intel® Celeron® N3160 SoC platform delivers an optimized balance between performance and power consumption
- Three HDMI connectors supporting triple independent display with up to 3840 x 2160 resolution
- Two GbE LAN for high speed network applications
- Two full-size/half-size PCIe Mini card slots (one supports mSATA module)
- One 2.5" SATA 6Gb/s HDD bay
- Four USB 3.0 ports
- Two RS-232 RJ-45 serial ports
- Support audio line-out, line-in and mic-in
- RoHS compliant design

1.3 Front Panel

The front panel of the IDS-300-BW contains a power button and three audio jacks. An overview of the front panel is shown in **Figure 1-2**.

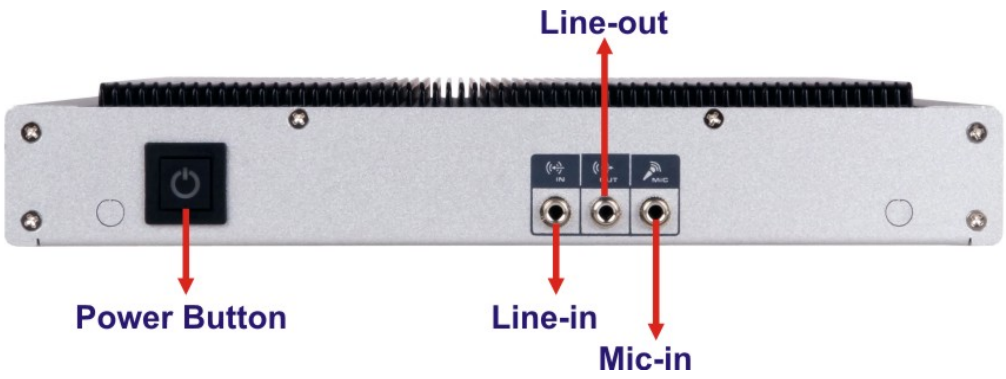

Figure 1-2: Front Panel

1.4 Rear Panel

The IDS-300-BW rear panel provides access to the external I/O connectors. An overview of the rear panel is shown in **Figure 1-3** below.

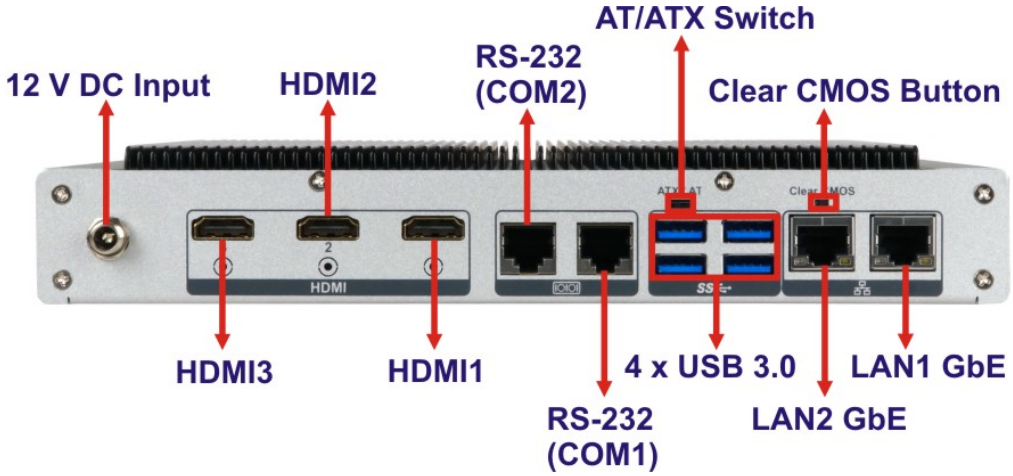

Figure 1-3: Rear Panel

1.5 Bottom Panel

The bottom panel of the IDS-300-BW contains several screw holes for VESA mount and wall mounting brackets. The bottom panel also provides access to the internal components, including HDD bay, SO-DIMM slot and PCIe Mini card slots.

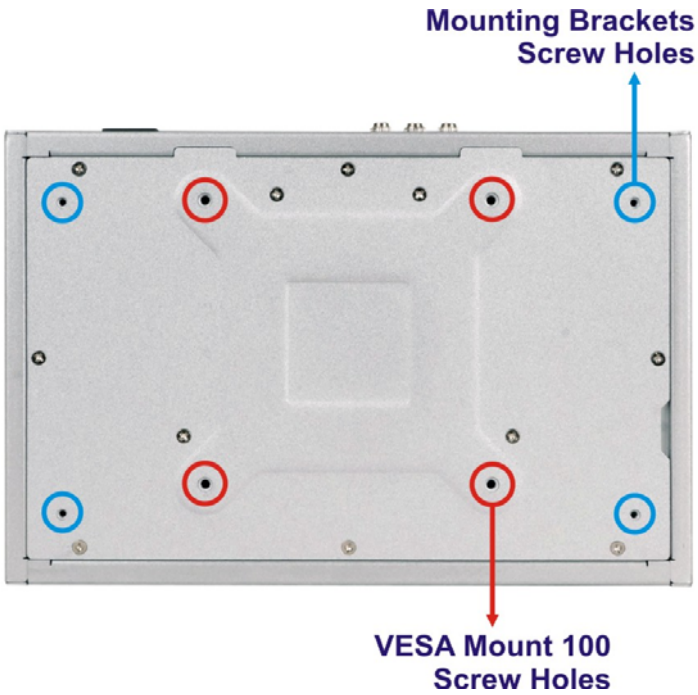

Figure 1-4: Bottom Panel

1.6 Technical Specifications

The specifications for the IDS-300-BW are listed below.

	IDS-300-BW
CPU	Intel® Celeron® N3160 SoC (up to 2.24 GHz, quad-core, 2 MB cache, TDP=6 W)
System Memory	1 x 1600/1333 MHz DDR3L SDRAM SO-DIMM slot (system max. 8 GB) 4 GB DDR3L SO-DIMM preinstalled
Output Resolution	HDMI 1 & HDMI 2: up to 3840x2160 @ 30Hz HDMI 3: up to 2560x1600 @ 60Hz (*HDMI 3 does not support hot-plugging and audio*)
Ethernet	2 x RJ-45 GbE LAN by Realtek RTL8111E PCIe GbE controller
Display	3 x HDMI connector
Serial Port	2 x RS-232 RJ-45 serial port
USB	4 x USB 3.0 port
Audio	5.1 channel Realtek ALC662 HD Audio codec 1 x Line-in jack 1 x Line-out jack 1 x Mic-in jack
Storage	1 x 2.5” SATA 6Gb/s HDD/SSD bay
Expansion Slot	2 x Full-size/half-size PCIe Mini slot (one supports mSATA modules)
Wireless	Optional Wi-Fi 802.11b/g/n
Button and Switch	1 x Power button 1 x Clear CMOS button 1 x AT/ATX power mode switch

Mounting	VESA mount 100 mm Wall mount with brackets
Power Input	12 V DC
Power Consumption	12 V @ 2 A (Intel® Celeron® N3160 with 4 GB memory)
Operating Temperature	-10ºC ~ 40ºC with air flow (SSD)
Operating Humidity	10% ~ 90%, non-condensing
Color	Silver
Chassis Construction	Aluminum alloys
Dimensions (W x D x H)	241 mm x 160 mm x 39 mm
Operation Vibration	MIL-STD-810F 514.5C-1 with HDD
Operation Shock	Half-sine wave shock 5G, 11ms, 3 shocks per axis
Weight (Net/Gross)	1.8 kg / 3 kg
EMC	CE, FCC
Supported OS	Microsoft Windows 8 Embedded or Microsoft Windows Embedded Standard 7

Table 1-1: Technical Specifications

1.7 Dimensions

The physical dimensions of the IDS-300-BW embedded systems are shown in **Figure 1-5**.

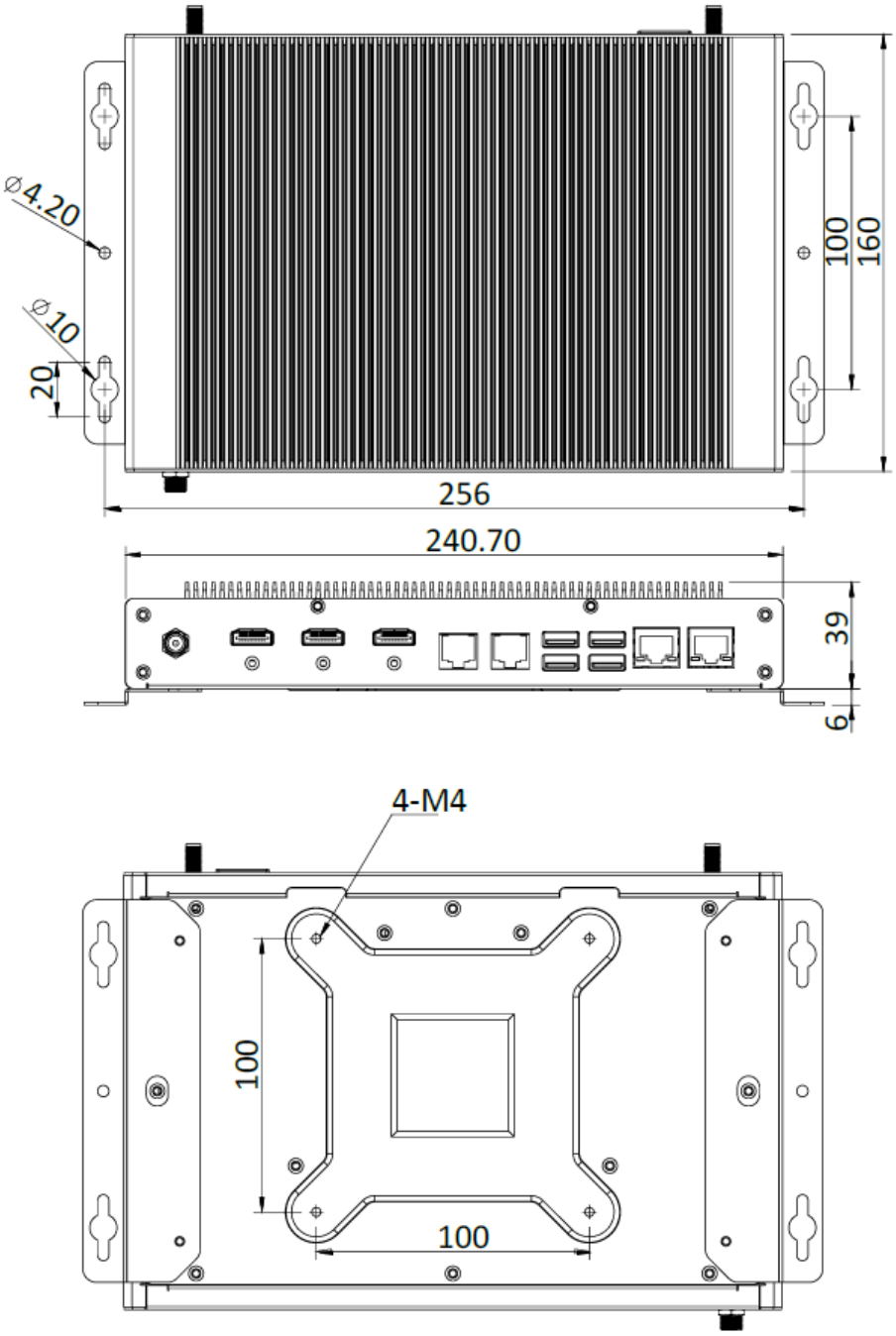

Figure 1-5: Dimensions (mm)

Chapter

2

Unpacking

2.1 Unpacking

To unpack the embedded system, follow the steps below:

Step 1: Use box cutters, a knife or a sharp pair of scissors that seals the top side of the external (second) box.

Step 2: Open the external (second) box.

Step 3: Use box cutters, a knife or a sharp pair of scissors that seals the top side of the internal (first) box.

Step 4: Lift the system out of the boxes.

Step 5: Remove both polystyrene ends, one from each side.

Step 6: Make sure all the components listed in the packing list are present.

2.2 Packing List

NOTE:

If any of the components listed in the checklist below are missing, do not proceed with the installation. Contact the IEI reseller or vendor the IDS-300-BW was purchased from or contact an IEI sales representative directly by sending an email to sales@ieiworld.com.

The IDS-300-BW is shipped with the following components:

Quantity	Item	Image
1	IDS-300-BW digital signage player	

1	Power adapter	
1	Power cord	
1	SATA cable	
2	Wall mount brackets	
1	Driver and manual CD	
1	One Key Recovery CD	

Table 2-1: Package List

2.3 Optional Items

The following are optional component(s) which may be separately purchased:

Wi-Fi kit (**P/N**: EMB-WIFI-KIT01-R11)	

OS Image with Windows® Embedded Standard 7 64-bit for IDS-300, DVD-ROM, RoHS (**P/N**:IDS-300-WES7E64-R10)	

Table 2-2: Optional Items

Chapter

3

Installation

3.1 Anti-static Precautions

WARNING:

Failure to take ESD precautions during installation may result in permanent damage to the IDS-300-BW and severe injury to the user.

Electrostatic discharge (ESD) can cause serious damage to electronic components, including the IDS-300-BW. Dry climates are especially susceptible to ESD. It is therefore critical that whenever the IDS-300-BW or any other electrical component is handled, the following anti-static precautions are strictly adhered to.

- ***Wear an anti-static wristband***: Wearing a simple anti-static wristband can help to prevent ESD from damaging the board.
- ***Self-grounding***: Before handling the board, touch any grounded conducting material. During the time the board is handled, frequently touch any conducting materials that are connected to the ground.
- ***Use an anti-static pad***: When configuring the IDS-300-BW, place it on an anti-static pad. This reduces the possibility of ESD damaging the IDS-300-BW.

3.2 Installation Precautions

During installation, be aware of the precautions below:

- **Read the user manual**: The user manual provides a complete description of the IDS-300-BW, installation instructions and configuration options.
- **DANGER! Disconnect Power**: Power to the IDS-300-BW must be disconnected during the installation process, or before any attempt is made to access the rear panel. Electric shock and personal injury might occur if the rear panel of the IDS-300-BW is opened while the power cord is still connected to an electrical outlet.
- **Qualified Personnel**: The IDS-300-BW must be installed and operated only by trained and qualified personnel. Maintenance, upgrades, or repairs may

only be carried out by qualified personnel who are familiar with the associated dangers.

- **Air Circulation**: Make sure there is sufficient air circulation when installing the IDS-300-BW. The IDS-300-BW must not be obstructed by any objects. Leave at least 5 cm of clearance around the IDS-300-BW to prevent overheating.
- **Grounding**: The IDS-300-BW should be properly grounded. The voltage feeds must not be overloaded. Adjust the cabling and provide external overcharge protection per the electrical values indicated on the label attached to the back of the IDS-300-BW.

3.2.1 High Surface Temperature

WARNING:

Some surfaces of the equipment may become hot during operation.

The surface temperature may be up to several tens of degrees hotter than the ambient temperature. Under these circumstances, the equipment needs to be protected against accidental contact.

The equipment is intended for installation in a RESTRICTED ACCESS LOCATION.

- Access can only be gained by SERVICE PERSONS or by USERS who have been instructed about the reasons for the restrictions applied to the location and about any precautions that shall be taken.
- Access is through the use of a TOOL or lock and key, or other means of security, and is controlled by the authority responsible for the location.

3.3 Bottom Surface Removal

Before the hard disk drive can be installed, the bottom surface must be removed. To remove the bottom surface, please follow the steps below:

Step 1: Remove the bottom surface retention screws. The bottom surface is secured to the chassis with eight (8) retention screws (**Figure 3-1**). All eight (8) screws must be removed.

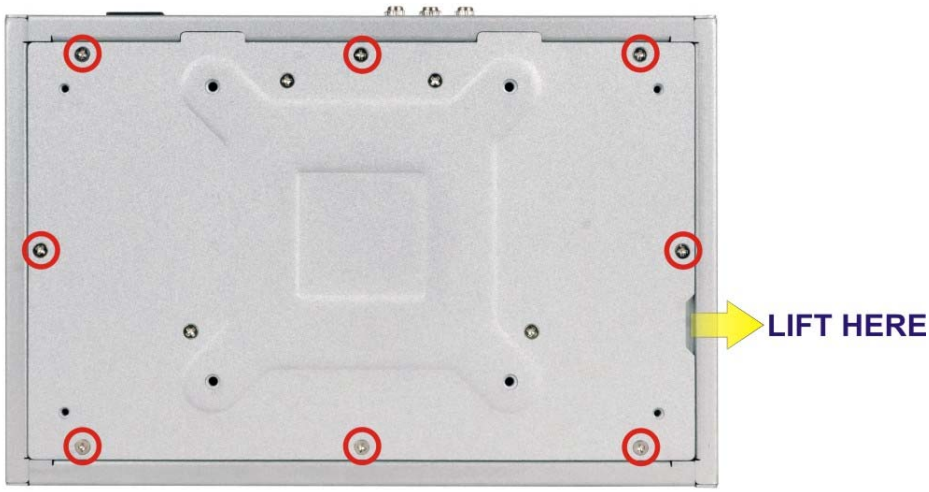

Figure 3-1: Bottom Surface Retention Screws

Step 2: Gently lift and remove the bottom surface from the IDS-300-BW.

3.4 Hard Drive Installation

One 2.5" SATA hard drive can be installed in the IDS-300-BW. The SATA drive is installed into a hard drive bracket attached on the inside of the bottom surface. To install the hard drive into the system, please follow the steps below.

Step 1: Remove the bottom surface. See **Section 3.3**.

Step 2: Remove the hard drive bracket from the bottom surface by removing the four retention screws that secure the bracket to the bottom surface (**Figure 3-2**).

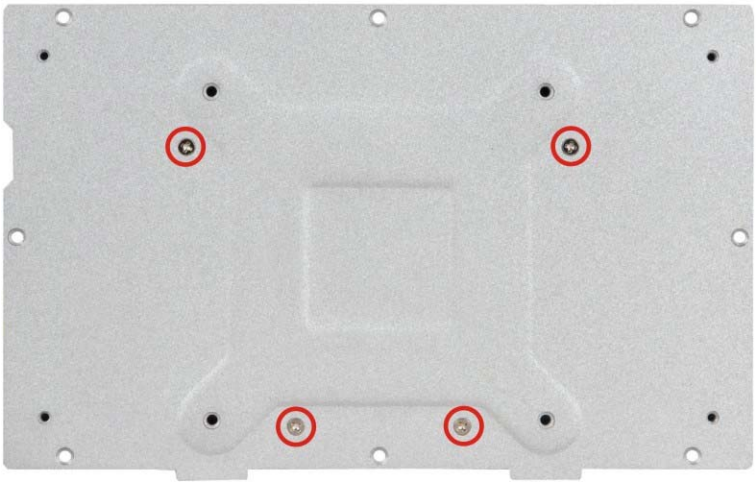

Figure 3-2: HDD Bracket Retention Screws

Step 3: Align the retention screw holes in the HDD with those in both sides of the bracket.

Step 4: Secure the HDD with the bracket by inserting four retention screws (M3*4) into the sides of the bracket (**Figure 3-3**).

Figure 3-3: HDD Retention Screws

Step 5: Connect the SATA cable connector to the HDD (**Figure 3-4**).

Step 6: Re-install the HDD bracket onto the bottom surface by aligning the four retention screw holes in the HDD bracket to the four screw holes on the bottom surface.

Step 7: Reinsert the four previously removed retention screws (**Figure 3-4**).

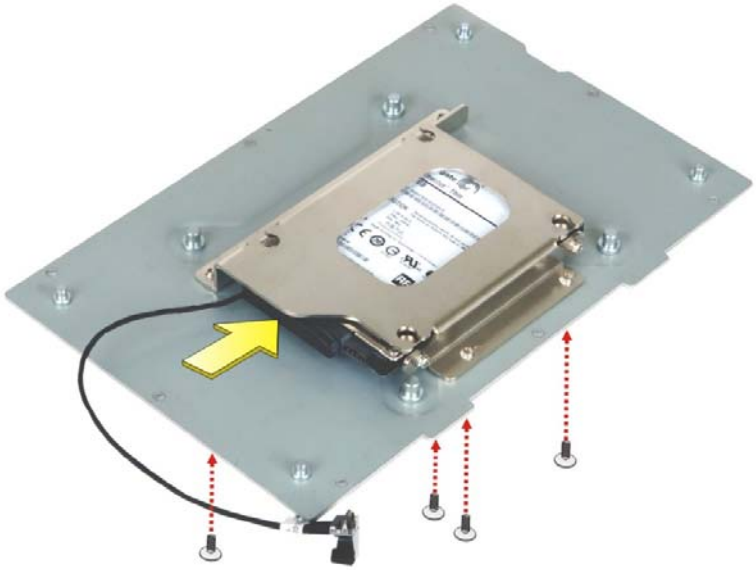

Figure 3-4: HDD Installation

Step 8: Connect the SATA cable to the SATA connector on the motherboard (**Figure 3-5**).

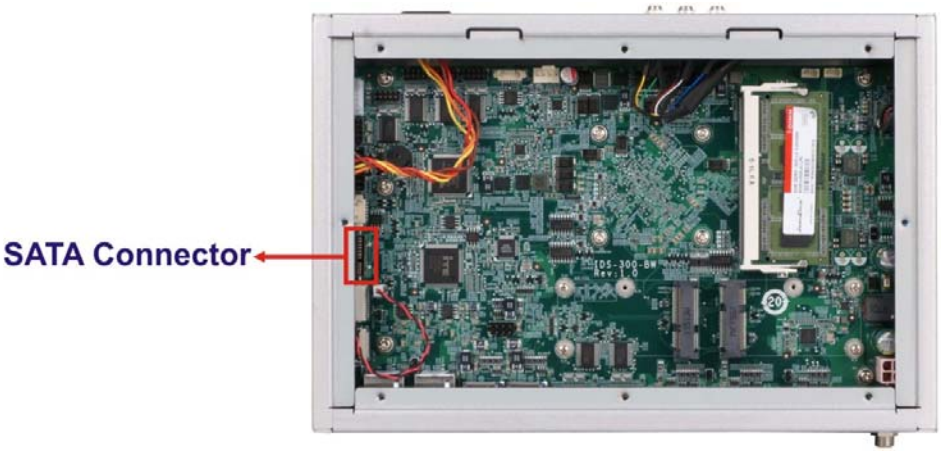

Figure 3-5: SATA Connector Location

Step 9: Replace the bottom surface to the bottom panel by reinserting the eight previously removed retention screws.

WARNING:

Over-tightening bottom cover screws will cause damage to the bottom surface. Maximum torque for cover screws is 5 kg-cm (0.36 lb-ft/0.49 Nm).

3.5 mSATA Module Installation

To install an mSATA module, please follow the steps below.

Step 1: Remove the bottom surface. See **Section 3.3**.

Step 2: Locate the PCIe Mini slot for mSATA module installation **(Figure 3-6)**.

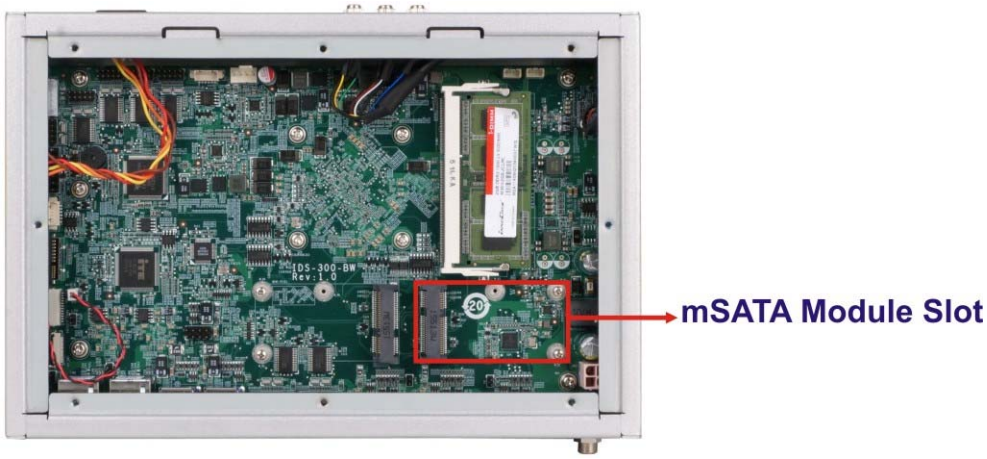

Figure 3-6: mSATA Module Slot Location

Step 3: Remove the two retention screws as shown in **Figure 3-7**.

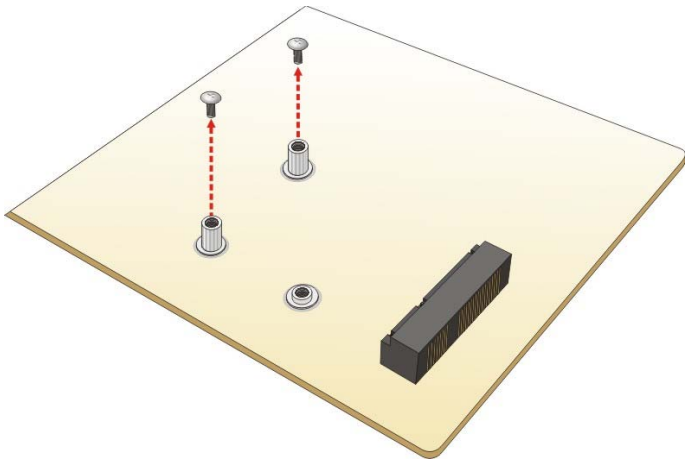

Figure 3-7: Removing the Retention Screws

Step 4: Insert into the socket at an angle. Line up the notch on the card with the notch on the slot. Slide the mSATA module into the socket at an angle of about 20º (**Figure 3-8**).

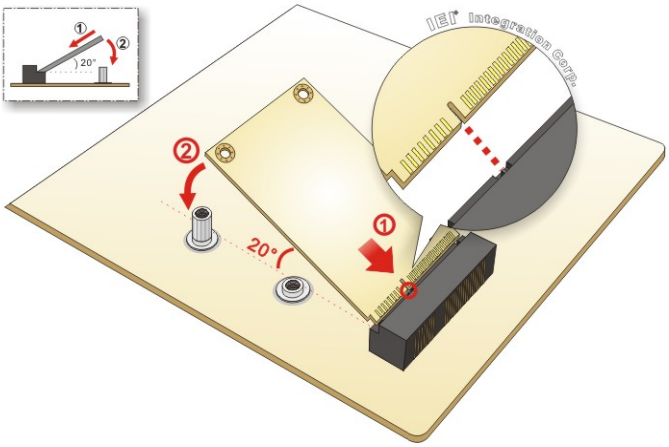

Figure 3-8: Inserting the mSATA Module into the Slot at an Angle

Step 5: Secure the mSATA module with the retention screws previously removed (**Figure 3-9**).

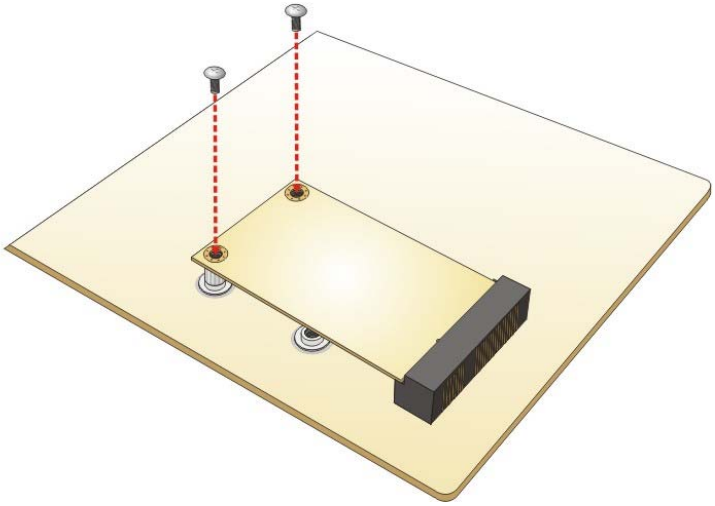

Figure 3-9: Securing the mSATA Module

3.6 Wireless LAN Module Installation (Optional)

To install the optional wireless LAN (WLAN) module, please follow the steps below.

Step 1: Remove the bottom surface. See **Section 3.3**.

Step 2: Remove the two knockouts for antenna installation. The two knockouts are located on the front panel of the IDS-300-BW as shown in **Figure 3-10**.

Figure 3-10: Knockouts for Wireless Antenna

Step 3: Locate the PCIe Mini slot **(Figure 3-11)**.

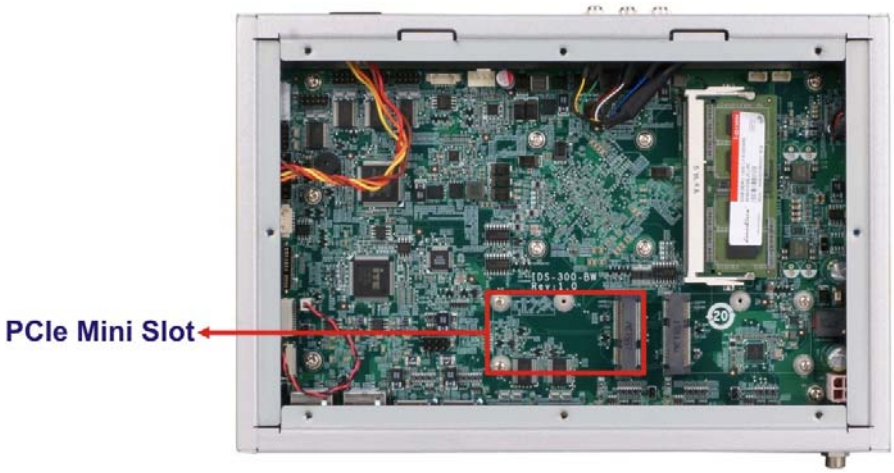

Figure 3-11: PCIe Mini Slot Location

Step 4: Remove the retention screw and the standoff secured on the motherboard as shown in **Figure 3-12**.

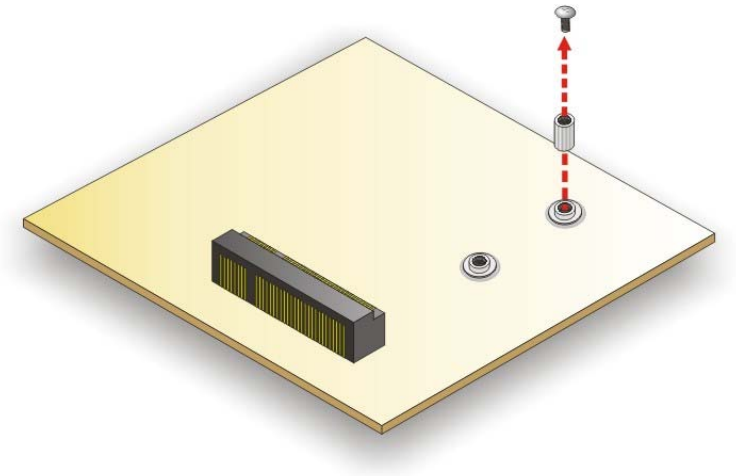

Figure 3-12: Removing the Retention Screw and Standoff

Step 5: Install the previously removed standoff to the screw hole for the WLAN module (**Figure 3-13**).

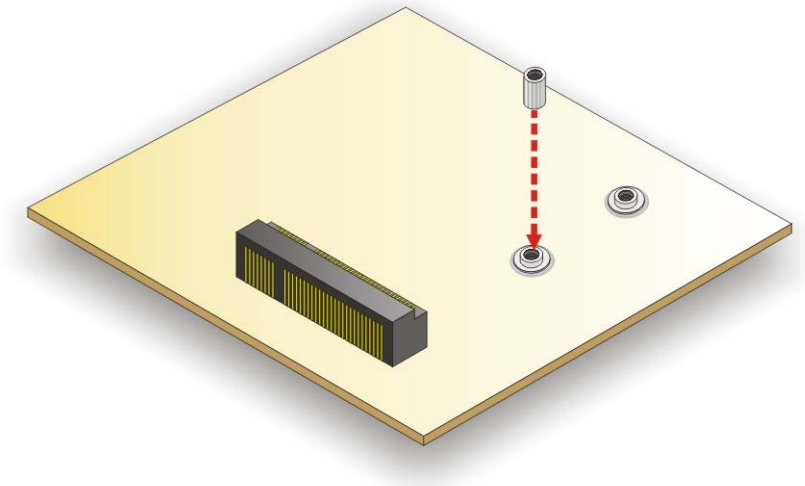

Figure 3-13: Installing the Standoff

Step 6: Line up the notch on the WLAN module with the notch on the slot. Slide the WLAN module into the slot at an angle of about 20º (**Figure 3-14**).

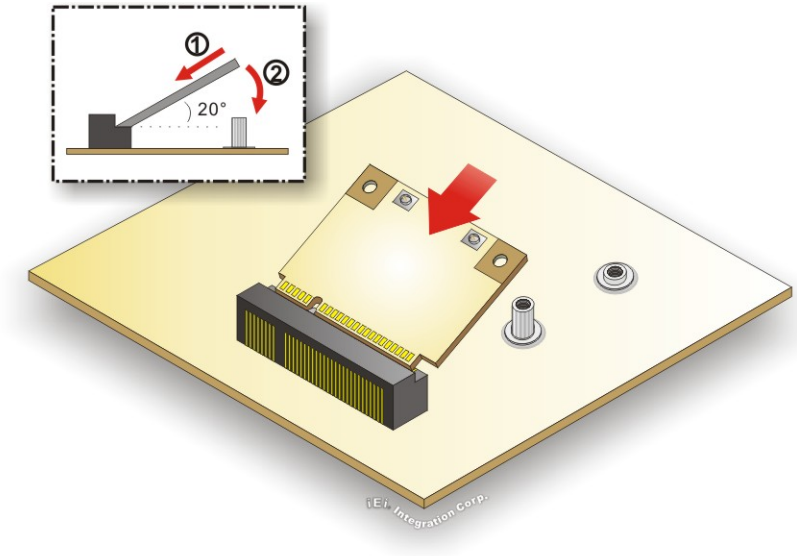

Figure 3-14: Inserting the WLAN Module

Step 7: Secure the WLAN module with the retention screw previously removed (**Figure 3-15**).

Step 8: Connect the two RF cables to the antenna connectors on the WLAN module (**Figure 3-15**).

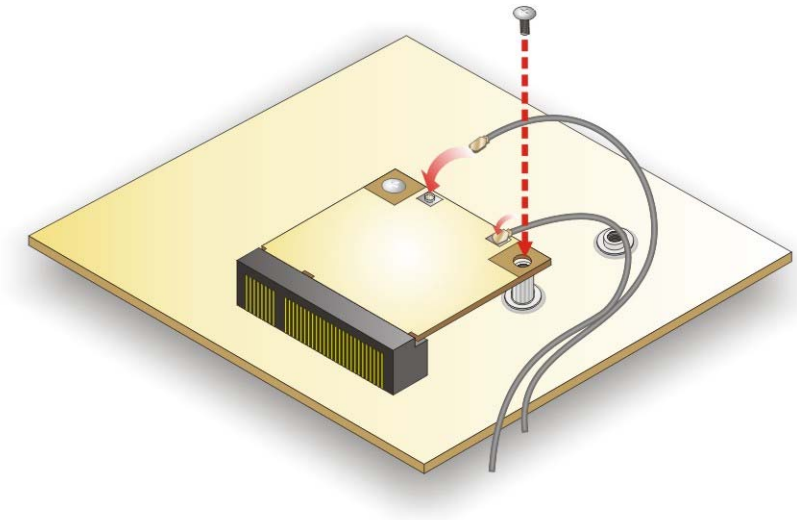

Figure 3-15: Securing WLAN Module and Connecting RF Cables

Step 9: Remove the nut and washer from the SMA connector at the other end of the RF cable.

Step 10: Insert the SMA connector to the antenna connector holes on the rear panel.

Step 11: Secure the SMA connector by inserting the washer and tightening it with nut.

Step 12: Install the external antenna.

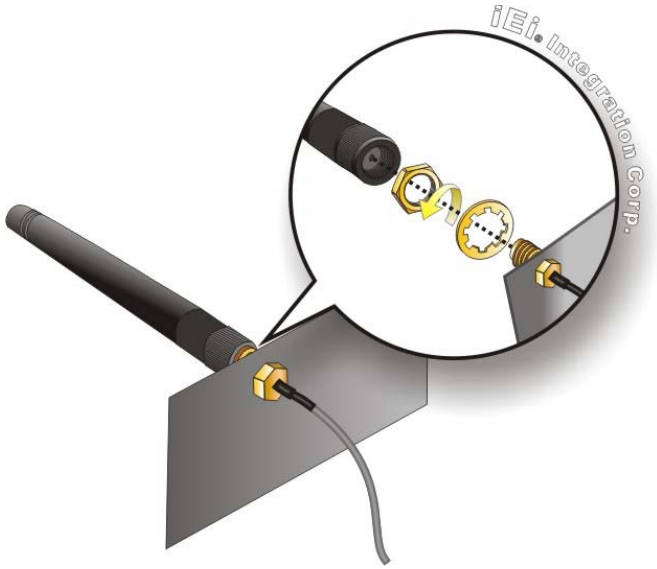

Figure 3-16: Securing SMA Connector and External Antenna Installation

3.7 AT/ATX Power Mode Selection

AT and ATX power modes can both be used on the IDS-300-BW series. The selection is made through an AT/ATX switch on the rear panel (**Figure 1-3**). To select AT mode or ATX mode, follow the steps below.

Step 1: Locate the AT/ATX switch on the bottom panel.

Figure 3-17: AT/ATX Switch Location

Step 2: Adjust the AT/ATX switch.

3.7.1 AT Power Mode

With the AT mode selected, the power is controlled by a central power unit rather than a power switch. The IDS-300-BW embedded system turns on automatically when the power is connected. The AT mode benefits a production line to control multiple systems from a central management center and other applications including:

- ATM
- Self-service kiosk
- Plant environment monitoring system
- Factory automation platform
- Manufacturing shop flow

3.7.2 ATX Power Mode

With the ATX mode selected, the IDS-300-BW embedded system goes in a standby mode when it is turned off. The embedded system can be easily turned on via network or a power switch in standby mode. Remote power control is perfect for advertising applications since the broadcasting time for each embedded system can be set individually and controlled remotely. Other possible application includes

- Security surveillance
- Point-of-Sale (POS)
- Advertising terminal

3.8 Mounting the System

To mount the IDS-300-BW onto a wall or some other surface using the two mounting brackets, please follow the steps below.

Step 1: Turn the embedded system over.

Step 2: Align the two retention screw holes in each bracket with the corresponding retention screw holes on the sides of the bottom surface.

Step 3: Secure the brackets to the system by inserting two retention screws into each bracket.

Figure 3-18: Mounting Bracket Retention Screws

Step 4: Drill holes in the intended installation surface.

Step 5: Align the mounting holes in the sides of the mounting brackets with the predrilled holes in the mounting surface.

Step 6: Insert four retention screws, two in each bracket, to secure the system to the wall.

NOTE:

The IDS-300-BW can also be mounted on a VESA 100 mm complaint mounting device. Follow the user manual came with the VESA mounting devices to mount the system.

3.9 External Peripheral Interface Connection

The following external peripheral devices can be connected to the external peripheral interface connectors.

- Audio devices
- RJ-45 Ethernet cable connectors
- HDMI monitors
- Serial port devices
- USB devices

To install these devices, connect the corresponding cable connector from the actual device to the corresponding IDS-300-BW external peripheral interface connector making sure the pins are properly aligned.

The locations of the external peripheral interface connectors are shown in **Figure 3-19**.

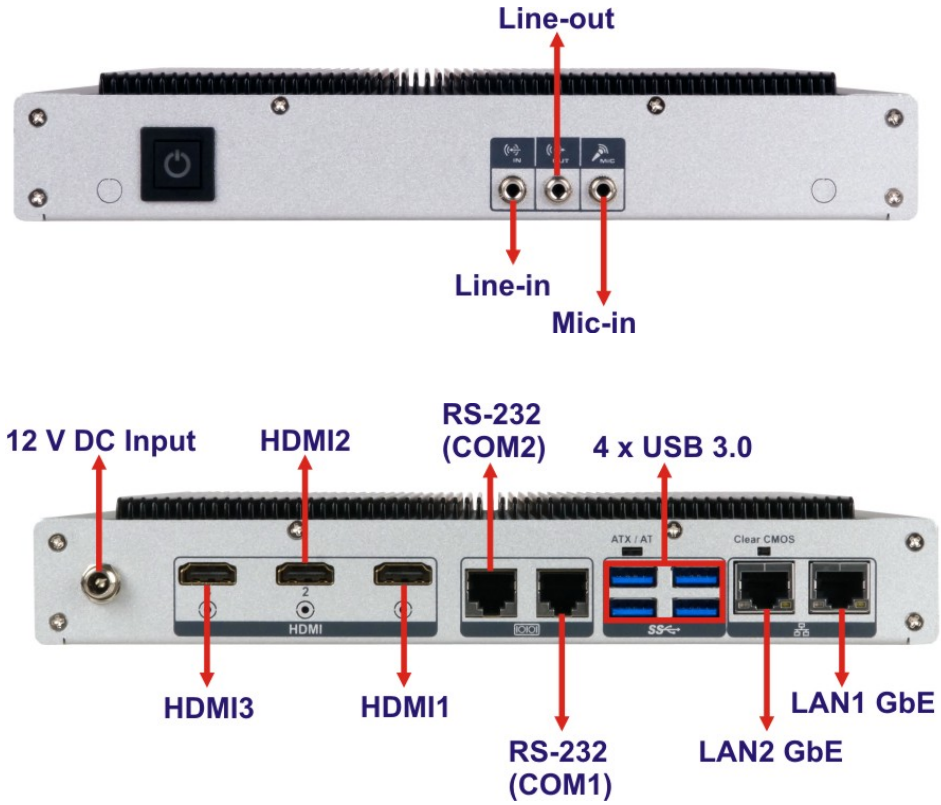

Figure 3-19: External Peripheral Interface Connectors

3.9.1 LAN Connectors

CN Label: **LAN1, LAN2**

CN Type: RJ-45

CN Pinouts: See **Table 3-1**

CN Location: See **Figure 3-19**

The LAN connector allows connection to an external network.

Pin	Description	Pin	Description
1	MDIA0+	5	MDIA2-
2	MDIA0-	6	MDIA1-
3	MDIA1+	7	MDIA3+
4	MDIA2+	8	MDIA3-

Table 3-1: LAN Connector Pinouts

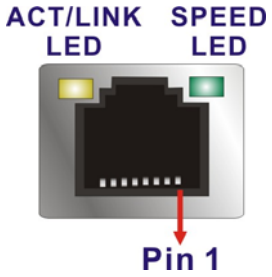

Figure 3-20: RJ-45 Ethernet Connector

The RJ-45 Ethernet connector has two status LEDs, one green and one yellow. The green LED indicates activity on the port and the yellow LED indicates the port is linked. See **Table 3-2**.

Activity / Link LED		Speed LED	
Status	**Description**	**Status**	**Description**
Off	No link	Off	10 Mbps connection
Yellow	Linked	Green	100 Mbps connection
Blinking	TX/RX activity	Orange	1 Gbps connection

Table 3-2: RJ-45 Ethernet Connector LEDs

3.9.2 HDMI Connectors

CAUTION:

Due to chipset limitation, audio and hot-plugging functions are not supported over the HDMI3 connector.

CN Label: **HDMI1, HDMI2, HDMI3**

CN Type: HDMI connector

CN Pinouts: See **Table 3-3** and **Figure 3-21**

CN Location: See **Figure 3-19**

The HDMI connector can connect to an HDMI device. The HDMI 1 and HDMI 2 connectors support up to 3840x2160 @ 30Hz while the HDMI 3 connector supports up to 2560x1600 @ 60Hz.

Pin	Description	Pin	Description
1	HDMI_DATA2+	11	GND
2	GND	12	HDMI_CLK#
3	HDMI_DATA2#-	13	N/C
4	HDMI_DATA1+	14	N/C
5	GND	15	HDMI_SCL
6	HDMI_DATA1#-	16	HDMI_SDA
7	HDMI_DATA0+	17	GND
8	GND	18	+5V
9	HDMI_DATA0#-	19	HDMI_HPD
10	HDMI_CLK+		

Table 3-3: HDMI Connector Pinouts

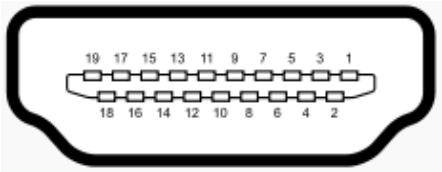

Figure 3-21: HDMI Connector

3.9.3 Power Connector

CN Label: **PWR1**

CN Type: DC jack

CN Pinouts: See **Table 3-4**

CN Location: See **Figure 3-19**

The connector supports 12 V power adapters.

Pin	Description
1	12V
2	GND
3	GND

Table 3-4: Power Connector Pinouts

Figure 3-22: Power Connector

3.9.4 RS-232 Serial Port Connectors

CN Label: **COM1, COM2**

CN Type: RJ-45

CN Pinouts: See **Table 3-5** and **Figure 3-23**

CN Location: See **Figure 3-19**

The RS-232 serial port connector allows connection to a serial device.

Pin	Description	Pin	Description
1	DCD	5	SOUT
2	DSR	6	CTS
3	SIN	7	DTR
4	RTS	8	RI

Table 3-5: Serial Port Pinouts

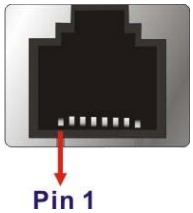

Figure 3-23: RJ-45 Serial Port

3.9.5 USB 3.0 Connectors

CN Label: **USB1, USB2**

CN Type: USB 3.0 port

CN Pinouts: See **Table 3-6** and **Figure 3-24**

CN Location: See **Figure 3-19**

The USB 3.0 ports are for connecting USB 2.0/3.0 peripheral devices to the system.

Pin	Description
1	VBUS
2	DATA-
3	DATA+
4	GND
5	STDA_SSRX_N
6	STDA_SSRX_P
7	GND_DRAIN
8	STDA_SSTX_N
9	STDA_SSTX_P

Table 3-6: USB 3.0 Port Pinouts

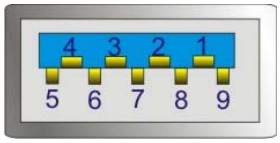

Figure 3-24: USB 3.0 Port

3.10 Power-On Procedure

3.10.1 Installation Checklist

WARNING:

Make sure a power supply with the correct input voltage is being fed into the system. Incorrect voltages applied to the system may cause damage to the internal electronic components and may also cause injury to the user.

To power on the embedded system please make sure of the following:

- The bottom surface panel is installed
- All peripheral devices (monitor, serial communications devices etc.) are connected
- The power cables are plugged in
- The system is securely mounted

3.10.2 Power-on Procedure

To power-on the IDS-300-BW, please follow the steps below.

Step 1: Connect the power source to the power input jack.

Step 2: Push the power button (**Figure 3-25**).

Step 3: Once turned on, the power button should turn to blue.

Figure 3-25: Power Button

3.11 Clear CMOS

If the IDS-300-BW fails to boot due to improper BIOS settings, the clear CMOS button clears the CMOS data and resets the system BIOS information. To do this, push the clear CMOS button for three seconds, and then restart the system. The clear CMOS button location is shown in **Figure 3-26**.

Figure 3-26: Clear CMOS Button Location

3.12 OS Installation

WARNING:

Before installing the operating system, the user must enter the **Boot** BIOS menu first and choose which operating system will be installed. Otherwise the USB 3.0 ports cannot be used for OS installation. Please refer to **Figure 3-27** and **Section 4.6**.

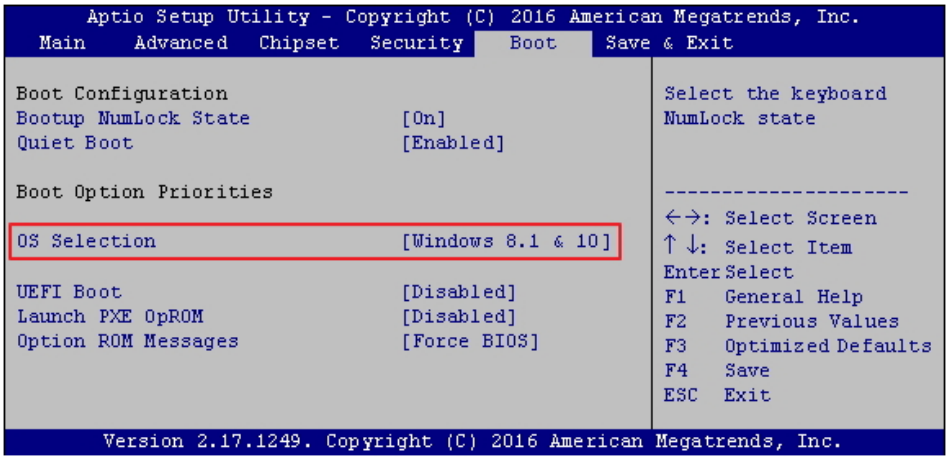

Figure 3-27: BIOS Option – OS Selection

3.12.1 Windows 7 Installation – USB 3.0 Creator Utility

Microsoft Windows 7 installation media does not include native driver support for USB 3.0, so during installation, a keyboard/mouse connected to a USB 3.0 port does not respond. The Windows 7 USB 3.0 Creator Utility automates the steps to update a Windows 7 installation image so that it contains USB 3.0 drivers. To install Windows 7 from a USB drive onto the IDS-300-BW, please follow the steps described below.

Step 1: Create a USB flash drive installer. Use your Windows 7 DVD or ISO image to create a bootable USB flash drive. Instructions on how to do can be found on Microsoft's website.

Step 2: Download and unzip the Windows 7 USB 3.0 Creator utility to a temporary folder on the Admin system.

Step 3: Connect the USB device containing the Windows 7 image to the Admin system.

Step 4: Right-click the file "Installer_Creator.exe" and select Run as administrator.

Step 5: Browse to the root of the USB drive.

Step 6: Click "Create Image" to begin the creation process.

Step 7: Wait for the process to finish. It can take up to 15 minutes.

Step 8: Using the updated installer, proceed with the Windows 7 installation as you normally would.

Chapter

4

BIOS

4.1 Introduction

The BIOS is programmed onto the BIOS chip. The BIOS setup program allows changes to certain system settings. This chapter outlines the options that can be changed.

4.1.1 Starting Setup

The UEFI BIOS is activated when the computer is turned on. The setup program can be activated in one of two ways.

1. Press the **DEL** or **F2** key as soon as the system is turned on or
2. Press the **DEL** or **F2** key when the "**Press DEL or F2 to enter SETUP**" message appears on the screen.

If the message disappears before the **DEL or F2** key is pressed, restart the computer and try again.

4.1.2 Using Setup

Use the arrow keys to highlight items, press **ENTER** to select, use the PageUp and PageDown keys to change entries, press **F1** for help and press **Esc** to quit. Navigation keys are shown in.

Key	Function
Up arrow	Move to previous item
Down arrow	Move to next item
Left arrow	Move to the item on the left hand side
Right arrow	Move to the item on the right hand side
+	Increase the numeric value or make changes
-	Decrease the numeric value or make changes
Esc key	Main Menu – Quit and not save changes into CMOS Status Page Setup Menu and Option Page Setup Menu -- Exit current page and return to Main Menu
F1	General help, only for Status Page Setup Menu and Option Page Setup Menu

Key	Function
F2	Previous values
F3	Load optimized defaults
F4	Save changes and Exit BIOS

Table 4-1: BIOS Navigation Keys

4.1.3 Getting Help

When **F1** is pressed a small help window describing the appropriate keys to use and the possible selections for the highlighted item appears. To exit the Help Window press **Esc** or the **F1** key again.

4.1.4 BIOS Menu Bar

The **menu bar** on top of the BIOS screen has the following main items:

- Main – Changes the basic system configuration.
- Advanced – Changes the advanced system settings.
- Chipset – Changes the chipset settings.
- Boot – Changes the system boot configuration.
- Security – Sets User and Supervisor Passwords.
- Save & Exit – Selects exit options and loads default settings

The following sections completely describe the configuration options found in the menu items at the top of the BIOS screen and listed above.

4.2 Main

The **Main** BIOS menu (**BIOS Menu 1**) appears when the **BIOS Setup** program is entered. The **Main** menu gives an overview of the basic system information.

```
      Aptio Setup Utility – Copyright (C) 2016 American Megatrends, Inc.
  Main    Advanced   Chipset    Boot    Security  Save & Exit

BIOS Information                                   Set the Date. Use Tab to
BIOS Vendor                    American Megatrends switch between Data
Core Version                   5.11                elements.
Compliancy                     UEFI 2.4; PI 1.3
Project Version                B368AR14.ROM
Build Date and Time            11/03/2016 15:07:44 ----------------------

iWDD Vendor                    iEi                 ←→: Select Screen
iWDD Version                   B368ER10.bin        ↑ ↓: Select Item
                                                   EnterSelect
Memory Information                                 + -   Change Opt.
Total Memory                   2048 MB (LPDDR3)    F1    General Help
                                                   F2    Previous Values
TXE Information                                    F3    Optimized Defaults
Sec RC Version                 00.05.00.00         F4    Save & Exit
TXE FW Version                 02.00.04.3098       ESC   Exit

CPU Configuration
Microcode Patch                40A

System Date                    [Fri 01/01/2010]
System Time                    [00:10:27]

Access Level                   Administrator
       Version 2.17.1249. Copyright (C) 2016 American Megatrends, Inc.
```

BIOS Menu 1: Main

➔ **System Date [xx/xx/xx]**

Use the **System Date** option to set the system date. Manually enter the day, month and year.

➔ **System Time [xx:xx:xx]**

Use the **System Time** option to set the system time. Manually enter the hours, minutes and seconds.

4.3 Advanced

Use the **Advanced** menu (**BIOS Menu 2**) to configure the CPU and peripheral devices through the following sub-menus:

WARNING!

Setting the wrong values in the sections below may cause the system to malfunction. Make sure that the settings made are compatible with the hardware.

```
      Aptio Setup Utility – Copyright (C) 2016 American Megatrends, Inc.
  Main    Advanced   Chipset   Security    Boot    Save & Exit

> ACPI Settings                                   System ACPI Parameters.
> RTC Wake Settings
> CPU Configuration
> SATA Configuration
> F81866 Super IO Configuration                   ----------------------
> iWDD H/M Monitor                                ←→: Select Screen
> Serial Port Console Redirection                 ↑ ↓: Select Item
> iEi Feature                                     Enter Select
> USB Configuration                               F1    General Help
> IEI QTS                                         F2    Previous Values
                                                  F3    Optimized Defaults
                                                  F4    Save
                                                  ESC   Exit
        Version 2.17.1249. Copyright (C) 2016 American Megatrends, Inc.
```

BIOS Menu 2: Advanced

4.3.1 ACPI Settings

The **ACPI Settings** menu (**BIOS Menu 3**) configures the Advanced Configuration and Power Interface (ACPI) options.

```
Aptio Setup Utility – Copyright (C) 2016 American Megatrends, Inc.
Advanced

ACPI Settings                                  ----------------------
ACPI Sleep State                [S3 (Suspend to RAM]
                                               ←→: Select Screen
                                               ↑ ↓: Select Item
                                               Enter Select
                                               +/-: Change Opt.
                                               F1:  General Help
                                               F2:  Previous Values
                                               F3:  Optimized Defaults
                                               F4:  Save & Exit
                                               ESC: Exit
Version 2.17.1249. Copyright (C) 2016 American Megatrends, Inc.
```

BIOS Menu 3: ACPI Settings

4.3.2 RTC Wake Settings

The **RTC Wake Settings** menu (**BIOS Menu 4**) configures RTC wake event.

```
Aptio Setup Utility – Copyright (C) 2016 American Megatrends, Inc.
Advanced

Wake system with Fixed Time      [Disabled]        Enable or disable System
                                                   wake on alarm event. When
                                                   enabled, System will
                                                   wake on the
                                                   date::hr::min::sec
                                                   specified

                                                   ----------------------

                                                   ←→: Select Screen
                                                   ↑ ↓: Select Item
                                                   EnterSelect
                                                   F1   General Help
                                                   F2   Previous Values
                                                   F3   Optimized Defaults
                                                   F4   Save
                                                   ESC  Exit
Version 2.17.1249. Copyright (C) 2016 American Megatrends, Inc.
```

BIOS Menu 4: RTC Wake Settings

➔ **Wake system with Fixed Time [Disabled]**

Use the **Wake system with Fixed Time** option to enable or disable the system wake on alarm event.

➔ **Disabled** **DEFAULT** The real time clock (RTC) cannot generate a wake event

➔ **Enabled** If selected, the **Wake up every day** option appears allowing you to enable to disable the system to wake every day at the specified time. Besides, the following options appear with values that can be selected:

Wake up date

Wake up hour

Wake up minute

Wake up second

After setting the alarm, the computer turns itself on from a suspend state when the alarm goes off.

4.3.3 CPU Configuration

Use the **CPU Configuration** menu (**BIOS Menu 5**) to view detailed CPU specifications and configure the CPU.

```
Aptio Setup Utility – Copyright (C) 2016 American Megatrends, Inc.
Advanced

CPU Configuration                                  When enabled, a VMM can
                                                   utilize the additional
Intel(R) Celeron(R) CPU N3160 @ 1.60GHz            hardware capabilities
CPU Signature                    406C4             provided by Vanderpool
Microcode Patch                  40A               Technology.
Max CPU Speed                    1600 MHz
Min CPU Speed                    480 MHz
Processor Cores                  4
Intel HT Technology              Not Supported
Intel VT-x Technology            Supported

L1 Data Cache                    24 KB x 4         ----------------------
L1 Code Cache                    32 KB x 4
L2 Cache                         1024 KB x 2       ←→: Select Screen
L3 Cache                         Not Present       ↑ ↓: Select Item
64-bit                           Supported         EnterSelect
                                                   F1   General Help
Intel Virtualization Technology  [Enabled]         F2   Previous Values
EIST                             [Enabled]         F3    Optimized
                                                   Defaults
                                                   F4    Save
                                                   ESC   Exit
Version 2.17.1249. Copyright (C) 2016 American Megatrends, Inc.
```

BIOS Menu 5: CPU Configuration

➔ **Intel® Virtualization Technology [Enabled]**

Use the **Intel® Virtualization Technology** option to enable or disable virtualization on the system. When combined with third party software, Intel® Virtualization technology allows several OSs to run on the same system at the same time.

➔ **Disabled** Disables Intel® Virtualization Technology.

➔ **Enabled** **DEFAULT** Enables Intel® Virtualization Technology.

➔ **EIST [Enabled]**

Use the **EIST** option to enable or disable the Intel® Speed Step Technology.

➔ **Disabled** Disables the Intel® Speed Step Technology.

➔ **Enabled** **DEFAULT** Enables the Intel® Speed Step Technology.

4.3.4 SATA Configuration

Use the **SATA Configuration** menu (**BIOS Menu 6**) to change and/or set the configuration of the SATA devices installed in the system.

```
Aptio Setup Utility – Copyright (C) 2016 American Megatrends, Inc.
Advanced

SATA Configuration                                  Enable/Disable SATA
                                                    Device
STAT Controller                  [Enabled]
SATA Mode Selection              [AHCI]
                                                    ---------------------
SATA1
Not Present                                         ←→: Select Screen
Hot Plug                         [Disabled]         ↑ ↓: Select Item
                                                    EnterSelect
SATA2 Port (MSATA1)                                 F1   General Help
Not Present                                         F2   Previous Values
Hot Plug                         [Disabled]         F3    Optimized
                                                    Defaults
                                                    F4    Save
                                                    ESC   Exit
Version 2.17.1249. Copyright (C) 2016 American Megatrends, Inc.
```

BIOS Menu 6: SATA Configuration

➔ **STAT Configuration [Enabled]**

Use the **STAT Configuration** option to enable or disable the SATA device.

➔ **Enabled** **DEFAULT** Enables the SATA device.

➔ **Disabled** Disables the SATA device.

➔ **SATA Mode Selection [AHCI]**

Use the **SATA Mode Selection** option to configure SATA devices as AHCI devices.

➔ **AHCI** **DEFAULT** Configures SATA devices as AHCI device.

➔ **Hot Plug [Disabled]**

Use the **Hot Plug** option to enable or disable the SATA device hot plug.

➔ **Enabled** Enables the SATA device hot plug

➔ **Disabled** **DEFAULT** Disables the SATA device hot plug.

4.3.5 F81866 Super IO Configuration

Use the **F81866 Super IO Configuration** menu (**BIOS Menu 7**) to set or change the configurations for the serial ports.

```
Aptio Setup Utility – Copyright (C) 2016 American Megatrends, Inc.
Advanced

F81866 Super IO Configuration                    Set Parameters of Serial
                                                 Port 1 (COMA)
Super IO Chip                    F81866
> Serial Port 1 Configuration                    --------------------
> Serial Port 2 Configuration                    ←→: Select Screen
                                                 ↑ ↓: Select Item
                                                 EnterSelect
                                                 F1   General Help
                                                 F2   Previous Values
                                                 F3    Optimized
                                                 Defaults
                                                 F4    Save
                                                 ESC   Exit
Version 2.17.1249. Copyright (C) 2016 American Megatrends, Inc.
```

BIOS Menu 7: F81866 Super IO Configuration

4.3.5.1 Serial Port n Configuration

Use the **Serial Port n Configuration** menu (**BIOS Menu 8**) to configure the serial port n.

```
Aptio Setup Utility – Copyright (C) 2016 American Megatrends, Inc.
Advanced

Serial Port 1 Configuration                    Enable or Disable Serial
                                               Port (COM)
Serial Port                  [Enabled]
Device Settings              IO=3F8h; IRQ=4
                                               ---------------------
Change Settings              [Auto]            ←→: Select Screen
                                               ↑ ↓: Select Item
                                               EnterSelect
                                               F1   General Help
                                               F2   Previous Values
                                               F3    Optimized
                                               Defaults
                                               F4    Save
                                               ESC   Exit
Version 2.17.1249. Copyright (C) 2016 American Megatrends, Inc.
```

BIOS Menu 8: Serial Port n Configuration

4.3.5.1.1 Serial Port 1 Configuration

➔ **Serial Port [Enabled]**

Use the **Serial Port** option to enable or disable the serial port.

➔ **Disabled**		Disable the serial port
➔ **Enabled**	**DEFAULT**	Enable the serial port

➔ **Change Settings [Auto]**

Use the **Change Settings** option to change the serial port IO port address and interrupt address.

➔ **Auto**	**DEFAULT**	The serial port IO port address and interrupt address are automatically detected.
➔ **IO=3F8h; IRQ=4**		Serial Port I/O port address is 3F8h and the interrupt address is IRQ4

- **IO=3F8h; IRQ=3, 4,5,6,7,9,10,11,12** — Serial Port I/O port address is 3F8h and the interrupt address is IRQ3,4,5,6,7,9,10,11,12
- **IO=2F8h; IRQ=3, 4,5,6,7,9,10,11,12** — Serial Port I/O port address is 2F8h and the interrupt address is IRQ3,4,5,6,7,9,10,11,12
- **IO=3E8h; IRQ=3, 4,5,6,7,9,10,11,12** — Serial Port I/O port address is 3E8h and the interrupt address is IRQ3,4,5,6,7,9,10,11,12
- **IO=2E8h; IRQ=3, 4,5,6,7,9,10,11,12** — Serial Port I/O port address is 2E8h and the interrupt address is IRQ3,4,5,6,7,9,10,11,12

4.3.5.1.2 Serial Port 2 Configuration

- **Serial Port [Enabled]**

Use the **Serial Port** option to enable or disable the serial port.

- **Disabled** — Disable the serial port
- **Enabled** DEFAULT — Enable the serial port

- **Change Settings [Auto]**

Use the **Change Settings** option to change the serial port IO port address and interrupt address.

- **Auto** DEFAULT — The serial port IO port address and interrupt address are automatically detected.
- **IO=2F8h; IRQ=3** — Serial Port I/O port address is 2F8h and the interrupt address is IRQ3
- **IO=3F8h; IRQ=3, 4,5,6,7,9,10,11,12** — Serial Port I/O port address is 3F8h and the interrupt address is IRQ3,4,5,6,7,9,10,11,12
- **IO=2F8h; IRQ=3, 4,5,6,7,9,10,11,12** — Serial Port I/O port address is 2F8h and the interrupt address is IRQ3,4,5,6,7,9,10,11,12
- **IO=3E8h; IRQ=3, 4,5,6,7,9,10,11,12** — Serial Port I/O port address is 3E8h and the interrupt address is IRQ3,4,5,6,7,9,10,11,12

➔ **IO=2E8h; IRQ=3, 4,5,6,7,9,10,11,12** — Serial Port I/O port address is 2E8h and the interrupt address is IRQ3,4,5,6,7,9,10,11,12

4.3.6 iWDD H/W Monitor

The **iWDD H/W Monitor** menu (**BIOS Menu 9**) contains the fan configuration submenus and displays operating temperature, fan speeds and system voltages.

```
Aptio Setup Utility – Copyright (C) 2016 American Megatrends, Inc.
Advanced

PC Health Status                                  Smart Fan Mode Select

CPU temperature                  :+29 °C
System temperature               :+31 °C

CPU_CORE                         :+0.947 V
+5V                              :+4.976 V        ---------------------
+12V                             :+12.193 V       ←→: Select Screen
+DDR                             :+1.378 V        ↑ ↓: Select Item
+5VSB                            :+4.991 V        EnterSelect
+3.3V                            :+3.310 V        + -   Change Opt.
+3.3VSB                          :+3.259 V        F1    General Help
                                                  F2    Previous Values
                                                  F3    Optimized Defaults
                                                  F4    Save & Exit
                                                  ESC   Exit
Version 2.17.1249. Copyright (C) 2016 American Megatrends, Inc.
```

BIOS Menu 9: iWDD H/W Monitor

➔ **PC Health Status**

The following system parameters and values are shown. The system parameters that are monitored are:

- System Temperatures:
  - CPU Temperature
  - System temperature
- Voltages
  - CPU_CORE
  - +5V
  - +12V

- +DDR
- +5VSB
- +3.3V
- +3.3VSB

4.3.7 Serial Port Console Redirection

The **Serial Port Console Redirection** menu (**BIOS Menu 10**) allows the console redirection options to be configured. Console redirection allows users to maintain a system remotely by re-directing keyboard input and text output through the serial port.

```
Aptio Setup Utility – Copyright (C) 2016 American Megatrends, Inc.
Advanced

 COM1                                          Console Redirection
 Console Redirection              [Disabled]   Enable or Disable
> Console Redirection Settings

 COM2
 Console Redirection              [Disabled]   ---------------------
> Console Redirection Settings                  ←→: Select Screen
                                               ↑ ↓: Select Item
 Legacy Console Redirection                    EnterSelect
> Legacy Console Redirection Settings           F1   General Help
                                               F2   Previous Values
                                               F3    Optimized
                                               Defaults
                                               F4    Save
                                               ESC   Exit
Version 2.17.1249. Copyright (C) 2016 American Megatrends, Inc.
```

BIOS Menu 10: Serial Port Console Redirection

➔ **Console Redirection [Disabled]**

Use **Console Redirection** option to enable or disable the console redirection function.

➔ **Disabled** DEFAULT Disabled the console redirection function

➔ **Enabled** Enabled the console redirection function

4.3.7.1 Console Redirection Settings

The **Console Redirection Settings** menu (**BIOS Menu 11**) allows the console redirection options to be configured. The option is active when Console Redirection option is enabled.

```
Aptio Setup Utility – Copyright (C) 2016 American Megatrends, Inc.
Advanced

COM1                                          Emulation: ANSI:
Console Redirection Settings                  Extended ASCII char set.
                                              VT100: ASCII char set.
Terminal Type                  [ANSI]         VT100+: Extends VT100 to
Bits per second                [115200]       support color, function
Data Bits                      [8]            keys, etc. VT-UTF8: Uses
Parity                         [None]         UTF8 encoding to map
Stop Bits                      [1]            Unicode chars onto 1 or
                                              more bytes.

                                              ---------------------
                                              ←→: Select Screen
                                              ↑ ↓: Select Item
                                              EnterSelect
                                              F1   General Help
                                              F2   Previous Values
                                              F3    Optimized
                                              Defaults
                                              F4    Save
                                              ESC   Exit

Version 2.17.1249. Copyright (C) 2016 American Megatrends, Inc.
```

BIOS Menu 11: Console Redirection Settings

➔ **Terminal Type [ANSI]**

Use the **Terminal Type** option to specify the remote terminal type.

➔ **VT100**		The target terminal type is VT100
➔ **VT100+**		The target terminal type is VT100+
➔ **VT-UTF8**		The target terminal type is VT-UTF8
➔ **ANSI**	**DEFAULT**	The target terminal type is ANSI

➔ **Bits per second [115200]**

Use the **Bits per second** option to specify the serial port transmission speed. The speed must match the other side. Long or noisy lines may require lower speeds.

➔ **9600**		Sets the serial port transmission speed at 9600.
➔ **19200**		Sets the serial port transmission speed at 19200.
➔ **38400**		Sets the serial port transmission speed at 38400.
➔ **57600**		Sets the serial port transmission speed at 57600.
➔ **115200**	DEFAULT	Sets the serial port transmission speed at 115200.

➔ **Data Bits [8]**

Use the **Data Bits** option to specify the number of data bits.

➔ **7**		Sets the data bits at 7.
➔ **8**	DEFAULT	Sets the data bits at 8.

➔ **Parity [None]**

Use the **Parity** option to specify the parity bit that can be sent with the data bits for detecting the transmission errors.

➔ **None**	DEFAULT	No parity bit is sent with the data bits.
➔ **Even**		The parity bit is 0 if the number of ones in the data bits is even.
➔ **Odd**		The parity bit is 0 if the number of ones in the data bits is odd.
➔ **Mark**		The parity bit is always 1. This option does not provide error detection.
➔ **Space**		The parity bit is always 0. This option does not provide error detection.

➔ **Stop Bits [1]**

Use the **Stop Bits** option to specify the number of stop bits used to indicate the end of a serial data packet. Communication with slow devices may require more than 1 stop bit.

➔ **1**	**DEFAULT**	Sets the number of stop bits at 1.
➔ **2**		Sets the number of stop bits at 2.

4.3.8 IEI Feature

Use the **IEI Feature** menu (**BIOS Menu 12**) to configure One Key Recovery function.

```
Aptio Setup Utility – Copyright (C) 2016 American Megatrends, Inc.
Advanced

iEi Feature                                   Auto Recovery Function
                                              Reboot and recover
Auto Recovery Function          [Disabled]    system automatically
                                              within 10 min, when OS
                                              crashes. Please install
                                              Auto Recovery API
                                              service before enabling
                                              this function

                                              ----------------------

                                              ←→: Select Screen
                                              ↑ ↓: Select Item
                                              EnterSelect
                                              F1   General Help
                                              F2   Previous Values
                                              F3   Optimized Defaults
                                              F4   Save
                                              ESC  Exit
Version 2.17.1249. Copyright (C) 2016 American Megatrends, Inc.
```

BIOS Menu 12: IEI Feature

➔ **Auto Recovery Function [Disabled]**

Use the **Auto Recovery Function** BIOS option to enable or disable the auto recovery function of the IEI One Key Recovery.

➔ **Disabled**	**DEFAULT**	Auto recovery function disabled
➔ **Enabled**		Auto recovery function enabled

4.3.9 USB Configuration

Use the **USB Configuration** menu (**BIOS Menu 13**) to read USB configuration information and configure the USB settings.

```
Aptio Setup Utility – Copyright (C) 2016 American Megatrends, Inc.
Advanced

USB Configuration                                  Enables Legacy USB
                                                   support. AUTO option
USB Devices:                                       disables legacy support
      1 Keyboard, 1 Hub                            if no USB devices are
                                                   connected. DISABLE
Legacy USB Support              [Enabled]          option will keep USB
                                                   devices available only
                                                   for EFI applications.

                                                   ---------------------
                                                   ←→: Select Screen
                                                   ↑ ↓: Select Item
                                                   EnterSelect
                                                   F1   General Help
                                                   F2   Previous Values
                                                   F3    Optimized
                                                   Defaults
                                                   F4    Save
                                                   ESC   Exit
Version 2.17.1249. Copyright (C) 2016 American Megatrends, Inc.
```

BIOS Menu 13: USB Configuration

➔ **USB Devices**

The **USB Devices Enabled** field lists the USB devices that are enabled on the system

➔ **Legacy USB Support [Enabled]**

Use the **Legacy USB Support** BIOS option to enable USB mouse and USB keyboard support. Normally if this option is not enabled, any attached USB mouse or USB keyboard does not become available until a USB compatible operating system is fully booted with all USB drivers loaded. When this option is enabled, any attached USB mouse or USB keyboard can control the system even when there is no USB driver loaded onto the system.

➔ **Enabled** **DEFAULT** Legacy USB support enabled

- ➔ **Disabled** Legacy USB support disabled
- ➔ **Auto** Legacy USB support disabled if no USB devices are connected

4.3.10 IEI QTS

Use the **IEI QTS** menu (**BIOS Menu 14**) to view the IEI QTS activation status.

```
Aptio Setup Utility – Copyright (C) 2016 American Megatrends, Inc.
Advanced

IEI QTS Active Status          [Non-Activated]

                                              ---------------------
                                              ←→: Select Screen
                                              ↑ ↓: Select Item
                                              EnterSelect
                                              F1   General Help
                                              F2   Previous Values
                                              F3    Optimized
                                              Defaults
                                              F4    Save
                                              ESC   Exit

Version 2.17.1249. Copyright (C) 2016 American Megatrends, Inc.
```

BIOS Menu 14: IEI QTS

4.4 Chipset

Use the **Chipset** menu (**BIOS Menu 15**) to access the north bridge and south bridge configuration menus

WARNING!

Setting the wrong values for the Chipset BIOS selections in the Chipset BIOS menu may cause the system to malfunction.

```
Aptio Setup Utility – Copyright (C) 2016 American Megatrends, Inc.
Main   Advanced   Chipset   Security   Boot   Save & Exit

> North Bridge                                  North Bridge Parameters
> South Bridge

                                                ---------------------
                                                ←→: Select Screen
                                                ↑ ↓: Select Item
                                                EnterSelect
                                                +/-:  Change Opt.
                                                F1    General Help
                                                F2    Previous Values
                                                F3    Optimized Defaults
                                                F4    Save & Exit
                                                ESC   Exit
Version 2.17.1249. Copyright (C) 2016 American Megatrends, Inc.
```

BIOS Menu 15: Chipset

4.4.1 North Bridge Configuration

Use the **North Bridge Configuration** menu (**BIOS Menu 16**) to configure the Intel IGD settings.

```
Aptio Setup Utility – Copyright (C) 2016 American Megatrends, Inc.
                    Chipset

> Intel IGD Configuration                       Configure Intel IGD
                                                Settings.
Memory Information

Total Memory                    2048 MB(LPDDR3)
                                                ---------------------
                                                ←→: Select Screen
DIMM1                           2048 MB(LPDDR3) ↑ ↓: Select Item
                                                EnterSelect
                                                +/-:  Change Opt.
                                                F1:   General Help
                                                F2:   Previous Values
                                                F3:   Optimized Defaults
                                                F4:   Save & Exit
                                                ESC:  Exit
Version 2.17.1249. Copyright (C) 2016 American Megatrends, Inc.
```

BIOS Menu 16: North Bridge Configuration

➔ **Memory Information**

The **Memory Information** lists a brief summary of the on-board memory. The fields in **Memory Information** cannot be changed.

4.4.1.1 Intel IGD Configuration

Use the **Intel IGD Configuration** menu (**BIOS Menu 17**) to configure the video device connected to the system.

```
Aptio Setup Utility – Copyright (C) 2016 American Megatrends, Inc.
                    Chipset

Intel IGD Configuration                          Select the Video Device
                                                 which will be activated
Primary IGFX Boot Display        [Auto]          during POST. This has no
DVMT Pre-Allocated               [256M]          effect if external
DVMT Total Gfx Mem               [Max]           graphics present.
                                                 Second boot display
                                                 selection will appear
                                                 based on you selection.
                                                 VGA modes will be
                                                 supported only on
                                                 primary display.

                                                 ---------------------
                                                 ←→: Select Screen
                                                 ↑ ↓: Select Item
                                                 EnterSelect
                                                 +/-:  Change Opt.
                                                 F1:  General Help
                                                 F2:  Previous Values
                                                 F3:  Optimized Defaults
                                                 F4:  Save & Exit
                                                 ESC: Exit
Version 2.17.1249. Copyright (C) 2016 American Megatrends, Inc.
```

BIOS Menu 17: Intel IGD Configuration

➔ **Primary IGFX Boot Display [Auto]**

Use the **Primary IGFX Boot Display** option to select the display device used by the system when it boots.

- Auto **DEFAULT**
- HDMI1
- HDMI2
- HDMI3

➔ **DVMT Pre-Allocated [256MB]**

Use the **DVMT Pre-Allocated** option to set the amount of system memory allocated to the integrated graphics processor when the system boots. The system memory allocated can then only be used as graphics memory, and is no longer available to applications or the operating system. Configuration options are listed below:

- 64M
- 128M
- 256M **DEFAULT**
- 512M

➔ **DVMT Total Gfx Mem [Max]**

Use the **DVMT Total Gfx Mem** option to select DVMT5.0 total graphic memory size used by the internal graphic device. The following options are available:

- 128MB
- 256MB
- Max **DEFAULT**

4.4.2 South Bridge Configuration

Use the **South Bridge Configuration** menu (**BIOS Menu 18**) to configure the south bridge chipset.

```
Aptio Setup Utility – Copyright (C) 2016 American Megatrends, Inc.
                    Chipset

Auto Power Button Function      [Enabled (AT)]      Select AC power state
                                                    when power is re-applied
Restore AC Power Loss           [Last State]        after a power failure.
Audio Controller                [Enabled]

> PCI Express Configuration                         ---------------------
                                                    ←→: Select Screen
                                                    ↑ ↓: Select Item
                                                    EnterSelect
                                                    +/-:  Change Opt.
                                                    F1:   General Help
                                                    F2:   Previous Values
                                                    F3:   Optimized Defaults
                                                    F4:   Save & Exit
                                                    ESC:  Exit
Version 2.17.1249. Copyright (C) 2016 American Megatrends, Inc.
```

BIOS Menu 18: South Bridge Configuration

➔ **Restore on AC Power Loss [Last State]**

Use the **Restore on AC Power Loss** BIOS option to specify what state the system returns to if there is a sudden loss of power to the system.

➔ **Power Off**		The system remains turned off
➔ **Power On**		The system turns on
➔ **Last State**	**DEFAULT**	The system returns to its previous state. If it was on, it turns itself on. If it was off, it remains off.

➔ **Audio Controller [Enabled]**

Use the **Audio Controller** option to enable or disable the High Definition Audio controller.

➔ **Disabled** The onboard High Definition Audio controller is disabled

➔ **Enabled** **DEFAULT** The onboard High Definition Audio controller is detected automatically and enabled

4.4.2.1 PCI Express Configuration

Use the **PCI Express Configuration** menu (**BIOS Menu 19**) to configure the PCI Express.

```
Aptio Setup Utility – Copyright (C) 2016 American Megatrends, Inc.
Advanced

PCI Express Configuration                          Configure PCIe Speed.
                                                   CHV A1 always with Gen1
MINI-PCIE1                                         Speed.
PCIe Speed                        [Auto]
Detect Non-Compliance Device      [Disabled]       ---------------------
                                                   ←→: Select Screen
PCIE1/MSATA1                                       ↑ ↓: Select Item
PCIe Speed                        [Auto]           EnterSelect
Detect Non-Compliance Device      [Disabled]       F1   General Help
                                                   F2   Previous Values
                                                   F3    Optimized
                                                   Defaults
                                                   F4    Save
                                                   ESC   Exit

Version 2.17.1249. Copyright (C) 2016 American Megatrends, Inc.
```

BIOS Menu 19: PCI Express Configuration

➔ **PCIe Speed [Auto]**

Use the **PCIe Speed** option to configure PCIe port speed.

➔ **Auto** **DEFAULT** Configure PCIe port speed to auto

➔ **Gen 2** Configure PCIe port speed to Gen2

➔ **Gen 1** Configure PCIe port speed to Gen1

➔ **Detect Non-Compliance Device [Disabled]**

Use the **Detect Non-Compliance Device** option to enable or disable the Non-compliant PCIe device detection function.

➔ **Disabled**	**DEFAULT**	Disables non-compliant PCIe device detection.
➔ **Enabled**		Enables non-compliant PCIe device detection.

4.5 Security

Use the **Security** menu (**BIOS Menu 20**) to set system and user passwords.

```
      Aptio Setup Utility – Copyright (C) 2016 American Megatrends, Inc.
  Main    Advanced   Chipset   Security    Boot    Save & Exit

Password Description                                  Set Administrator
                                                      Password
If ONLY the Administrator's password is set,
then this only limits access to Setup and is
only asked for when entering Setup                    ---------------------
If ONLY the User's password is set, then this         ←→: Select Screen
is a power on password and must be entered to         ↑ ↓: Select Item
boot or enter Setup. In Setup the User will           EnterSelect
have Administrator rights.                            F1   General Help
The password length must be:                          F2   Previous Values
Minimum length                  3                     F3    Optimized
Maximum length                  20                    Defaults
                                                      F4    Save
Administrator Password                                ESC   Exit
User Password

        Version 2.17.1249. Copyright (C) 2016 American Megatrends, Inc.
```

BIOS Menu 20: Security

➔ **Administrator Password**

Use the **Administrator Password** to set or change a administrator password.

➔ **User Password**

Use the **User Password** to set or change a user password.

4.6 Boot

Use the **Boot** menu (**BIOS Menu 21**) to configure system boot options.

```
      Aptio Setup Utility – Copyright (C) 2016 American Megatrends, Inc.
  Main    Advanced   Chipset   Security   Boot    Save & Exit

Boot Configuration                                  Select the keyboard
Bootup NumLock State            [On]                NumLock state
Quiet Boot                      [Enabled]

Boot Option Priorities                              ---------------------
                                                    ←→: Select Screen
OS Selection                    [Windows 8.1 & 10]  ↑ ↓: Select Item
                                                    EnterSelect
UEFI Boot                       [Disabled]          F1   General Help
Launch PXE OpROM                [Disabled]          F2   Previous Values
Option ROM Messages             [Force BIOS]        F3   Optimized Defaults
                                                    F4   Save
                                                    ESC  Exit

       Version 2.17.1249. Copyright (C) 2016 American Megatrends, Inc.
```

BIOS Menu 21: Boot

➔ **Bootup NumLock State [On]**

Use the **Bootup NumLock State** BIOS option to specify if the number lock setting must be modified during boot up.

➔ **On** **DEFAULT** Allows the Number Lock on the keyboard to be enabled automatically when the computer system boots up. This allows the immediate use of the 10-key numeric keypad located on the right side of the keyboard. To confirm this, the Number Lock LED light on the keyboard is lit.

➔ **Off** Does not enable the keyboard Number Lock automatically. To use the 10-keys on the keyboard, press the Number Lock key located on the upper left-hand corner of the 10-key pad. The Number Lock LED on the keyboard lights up when the Number Lock is engaged.

➔ **Quiet Boot [Enabled]**

Use the **Quiet Boot** BIOS option to select the screen display when the system boots.

➔ **Disabled**		Normal POST messages displayed
➔ **Enabled**	**DEFAULT**	OEM Logo displayed instead of POST messages

➔ **OS Selection [Windows 8.1 & 10]**

Use the **OS Selection** BIOS option to select an operating system (OS) before installing OS.

➔ **Windows 8.1 & 10**	**DEFAULT**	The system will be installed with Windows 8.1 or Windows 10 operating system.
➔ **Windows 7**		The system will be installed with Windows 7 operating system.
➔ **Linux**		The system will be installed with Linux operating system.

➔ **UEFI Boot [Disabled]**

Use the **UEFI Boot** option to enable or disable to boot from the UEFI devices.

➔ **Disabled**	**DEFAULT**	Boot from UEFI devices is disabled.
➔ **Enabled**		Boot from UEFI devices is enabled.

➔ **Launch PXE OpROM [Disabled]**

Use the **Launch PXE OpROM** option to enable or disable boot option for legacy network devices.

➔ **Disabled**	**DEFAULT**	Ignore all PXE Option ROMs
➔ **Enabled**		Load PXE Option ROMs.

➔ **Option ROM Messages [Force BIOS]**

Use the **Option ROM Messages** option to set the Option ROM display mode.

➔ **Force BIOS**	**DEFAULT**	Sets display mode to force BIOS.
➔ **Keep Current**		Sets display mode to current.

➔ **Boot Option Priority**

Use the **Boot Option Priority** function to set the system boot sequence from the available devices. The drive sequence also depends on the boot sequence in the individual device section.

4.7 Exit

Use the **Exit** menu (**BIOS Menu 22**) to load default BIOS values, optimal failsafe values and to save configuration changes.

```
      Aptio Setup Utility – Copyright (C) 2016 American Megatrends, Inc.
  Main    Advanced   Chipset   Security    Boot    Save & Exit

  Save Options                                    Reset the system after
  Save Changes and Reset                          saving the changes.
  Discard Changes and Reset

  Default Options
  Restore Defaults
  Save as User Defaults
  Restore User Defaults                           ---------------------
                                                  ←→: Select Screen
                                                  ↑ ↓: Select Item
                                                  EnterSelect
                                                  F1   General Help
                                                  F2   Previous Values
                                                  F3    Optimized
                                                  Defaults
                                                  F4    Save
                                                  ESC   Exit
       Version 2.17.1249. Copyright (C) 2016 American Megatrends, Inc.
```

BIOS Menu 22: Exit

➔ **Save Changes and Reset**

Use the **Save Changes and Reset** option to save the changes made to the BIOS options and to exit the BIOS configuration setup program.

➔ **Discard Changes and Reset**

Use the **Discard Changes and Reset** option to exit the system without saving the changes made to the BIOS configuration setup program.

➔ **Restore Defaults**

Use the **Restore Defaults** option to load the optimal default values for each of the parameters on the Setup menus. **F3 key can be used for this operation.**

➔ **Save as User Defaults**

Use the **Save as User Defaults** option to save the changes done so far as user defaults.

➔ **Restore User Defaults**

Use the **Restore User Defaults** option to restore the user defaults to all the setup options.

Chapter

5

Maintenance

WARNING:

Take Anti-Static precautions whenever maintenance is being carried out on the system components. Failure to take anti-static precautions can cause permanent system damage. For more details on anti-static precautions, please refer to **Section 3.1**.

5.1 System Maintenance Overview

NOTE:

When doing maintenance operations on the system, please follow the instructions in this chapter. Failure to follow these instructions may lead to personal injury and system damage.

To preserve the working integrity of the IDS-300-BW, the system must be properly maintained. If internal components need replacement, the proper maintenance procedures must be followed to ensure the system can continue to operate normally.

5.2 Component Replacement Procedure

WARNING!

Users are not advised to attempt to repair or replace any internal or external components of the IDS-300-BW embedded system other than those listed below. If any other components fail or need replacement, contact the IEI reseller or vendor you purchased the IDS-300-BW from or contact an IEI sales representative directly. To contact an IEI sales representative, please send an email to sales@ieiworld.com.

The system components listed below can all be replaced if they fail:

- SO-DIMM module
- Wi-Fi module (optional)

5.2.1 SO-DIMM Replacement

WARNING:

Using incorrectly specified SO-DIMM may cause permanently damage the IDS-300-BW. Please make sure the purchased SO-DIMM complies with the memory specifications of the IDS-300-BW.

To replace a SO-DIMM memory module into a SO-DIMM socket, please follow the steps below.

Step 1: **Remove the bottom panel** retention screws (**Figure 5-1**) and lift the bottom panel.

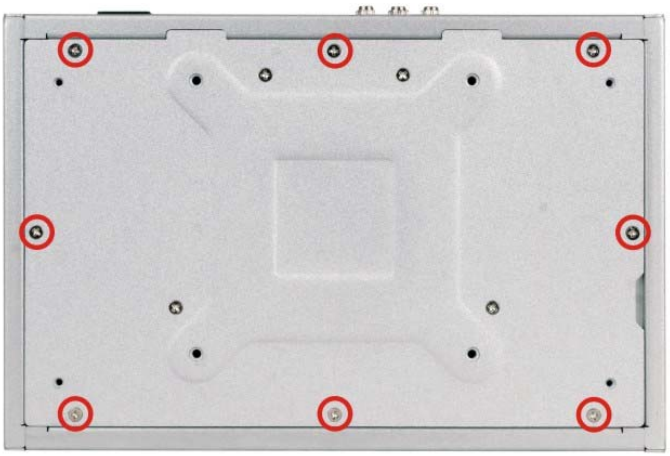

Figure 5-1: Bottom Panel Retention Screws

Step 2: **Locate the SO-DIMM** inside the bottom panel (**Figure 5-2**).

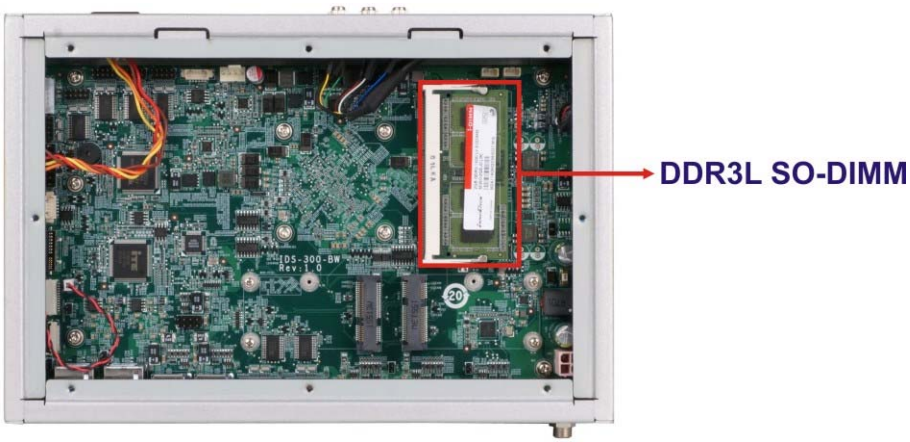

Figure 5-2: SO-DIMM Location

Step 3: Remove the SO-DIMM by releasing the arms on the SO-DIMM socket. Align the new SO-DIMM with the socket. The SO-DIMM must be oriented in such a way that the notch in the middle of the SO-DIMM must be aligned with the plastic bridge in the socket (**Figure 5-3**).

Step 4: Insert the SO-DIMM. Push the SO-DIMM chip into the socket at an angle (**Figure 5-3**).

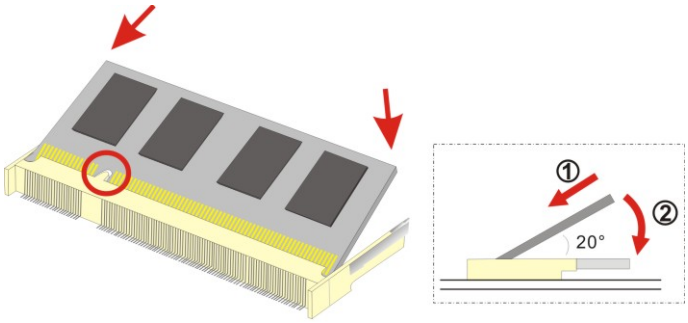

Figure 5-3: SO-DIMM Installation

Step 5: **Secure the SO-DIMM**. Press the SO-DIMM down until the arms of the SO-DIMM socket clip into place and secure the SO-DIMM in the socket.

Chapter

6

Interface Connectors

6.1 Peripheral Interface Connectors

The IDS-300-BW series' motherboard comes with a number of peripheral interface connectors and configuration jumpers. The connector locations are shown in **Figure 6-1**. The Pin 1 locations of the on-board connectors are also indicated in the diagrams below. The connector pinouts for these connectors are listed in the following sections.

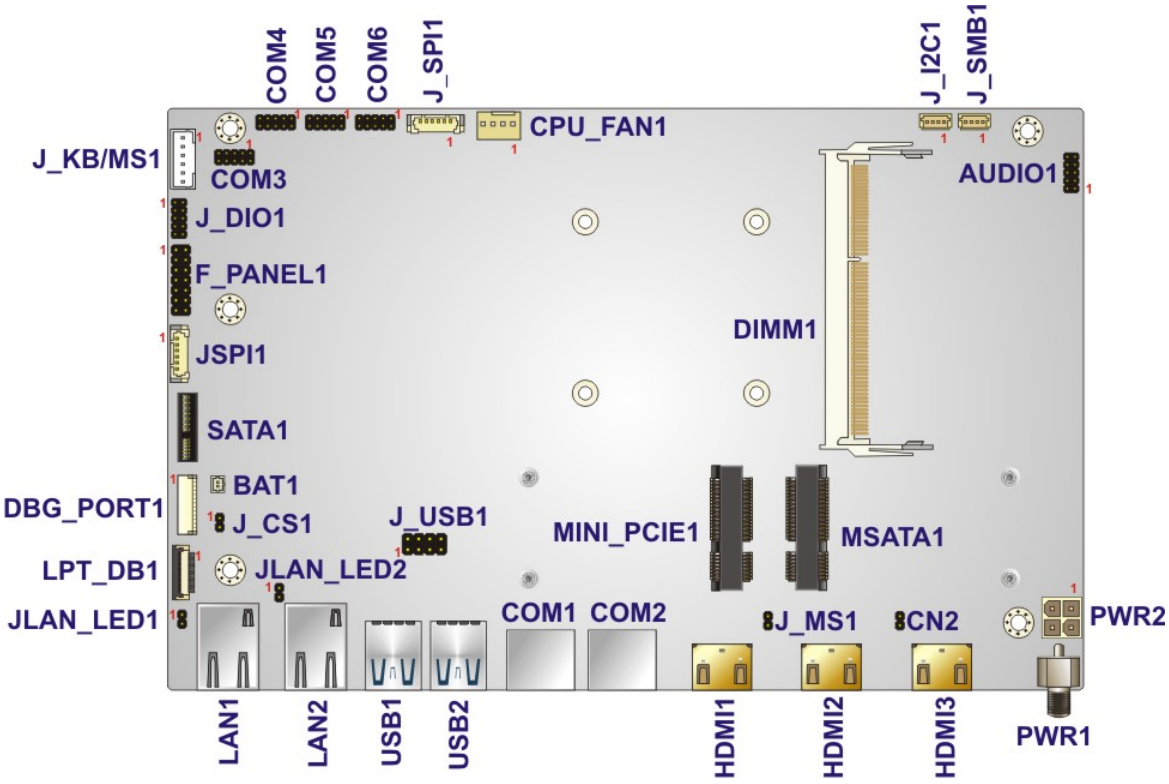

Figure 6-1: Main Board Layout Diagram

6.2 Internal Peripheral Connectors

Internal peripheral connectors are found on the motherboard and are only accessible when the motherboard is outside of the chassis. Pinouts of the internal connectors listed in **Table 6-1** can be found in the following sections.

Connector	Type	Label
Audio connector	10-pin header	AUDIO1
Chassis intrusion connector	2-pin header	J_CS1
Debug card connector	12-pin wafer	DBG_PORT1
Digital I/O connector	10-pin header	J_DIO1
EC debug connector	18-pin wafer	LPT_DB1
Fan connector	4-pin wafer	CPU_FAN1
Front panel connector	14-pin header	F_PANEL1
I^2C connector	4-pin wafer	J_I2C1
Keyboard/Mouse connector	6-pin wafer	J_KB/MS1
LAN link LED connectors	2-pin header	JLAN_LED1, JLAN_LED2
mSATA module slot	PCIe Mini card slot	MSATA1
PCIe Mini card slot	PCIe Mini card slot	MINI_PCIE1
Power connector	4-pin connector	PWR2
RS-232 serial ports	10-pin header	COM3, COM4, COM5
RS-232/422/485 serial port	10-pin header	COM6
SATA connector with power	13-pin (7+6) SATA	SATA1
SMBus connector	4-pin wafer	J_SMB1
SO-DIMM connector	SO-DIMM connector	DIMM1
SPI Flash connector, BIOS	8-pin header	J_SPI1
SPI Flash connector, EC	8-pin header	JSPI1
USB 2.0 connector	8-pin header	J_USB1

Table 6-1: Peripheral Interface Connectors

6.2.1 Audio Connector (AUDIO1)

PIN NO.	DESCRIPTION	PIN NO.	DESCRIPTION
1	SPK_OUT-R	2	LINE_IN-R
3	GND	4	GND
5	SPK_OUT-L	6	LINE_IN-L
7	GND	8	GND
9	MIC-R	10	MIC-L

Table 6-2: Audio Connector (AUDIO1) Pinouts

6.2.2 Chassis Intrusion Connector (J_CS1)

PIN NO.	DESCRIPTION
1	+V3.3A_EC
2	CHASSIS OPEN#

Table 6-3: Chassis Intrusion Connector (J_CS1) Pinouts

6.2.3 Debug Card Connector (DBG_PORT1)

PIN NO.	DESCRIPTION	PIN NO.	DESCRIPTION
1	GND	2	CLK_PCI_TPM
3	PLTRST_N	4	LPC_FRAME#
5	LPC_AD0	6	LPC_AD1
7	LPC_AD2	8	LPC_AD3
9	INT_SERIRQ	10	GND
11	+3.3V	12	

Table 6-4: Debug Card Connector (DBG_PORT1) Pinouts

6.2.4 Digital I/O Connector (J_DIO1)

PIN NO.	DESCRIPTION	PIN NO.	DESCRIPTION
1	GND	2	+5V
3	DOUT3	4	DOUT2
5	DOUT1	6	DOUT0
7	DIN3	8	DIN2
9	DIN1	10	DIN0

Table 6-5: Digital I/O Connector (J_DIO1) Pinouts

6.2.5 EC Debug Connector (LPT_DB1)

PIN NO.	DESCRIPTION	PIN NO.	DESCRIPTION
1	EC_EPP_STB#	2	EC_EPP_AFD#
3	EC_EPP_PD0	4	NC
5	EC_EPP_PD1	6	EC_EPP_INIT#
7	EC_EPP_PD2	8	EC_EPP_SLIN#
9	EC_EPP_PD3	10	GND
11	EC_EPP_PD4	12	NC
13	EC_EPP_PD5	14	EC_EPP_BUSY
15	EC_EPP_PD6	16	EC_EPP_KSI5
17	EC_EPP_PD7	18	EC_EPP_KSI4

Table 6-6: EC Debug Connector (LPT_DB1) Pinouts

6.2.6 Fan Connector (CPU_FAN1)

PIN NO.	DESCRIPTION
1	GND
2	+12V
3	FANIO
4	PWM

Table 6-7: Fan Connector (CPU_FAN1) Pinouts

6.2.7 Front Panel Connector (F_PANEL1)

	PIN	DESCRIPTION		PIN	DESCRIPTION
Power LED	1	+5V	Speaker	2	BEEP_PWR
	3	NC		4	NC
	5	GND		6	NC
Power Button	7	PWRBT_SW#		8	PC_BEEP
	9	GND		10	NC
HDD LED	11	+5V	Reset Button	12	EXTRST-
	13	SATA_LED#		14	GND

Table 6-8: Front Panel Connector (F_PANEL1) Pinouts

6.2.8 I^2C Connector (J_I2C1)

PIN NO.	DESCRIPTION
1	GND
2	I2C_DAT
3	I2C_CLK
4	+5V

Table 6-9: I^2C Connector (J_I2C1) Pinouts

6.2.9 Keyboard/Mouse Connector (J_KB/MS1)

PIN NO.	DESCRIPTION
1	VCC5_KBMS
2	MSDATA
3	MSCLK
4	KBDATA
5	KBCLK
6	KBGND

Table 6-10: Keyboard/Mouse Connector (J_KB/MS1) Pinouts

6.2.10 LAN Link LED Connector (JLAN_LED1, JLAN_LED2)

PIN NO.	DESCRIPTION
1	+V3.3A
2	LAN_LINK_ACT-

Table 6-11: LAN Link LED Connector (JLAN_LED1, JLAN_LED2) Pinouts

6.2.11 PCIe Mini Slots (MINI_PCIE1, MSATA1)

PIN NO.	DESCRIPTION	PIN NO.	DESCRIPTION
1	PCIE_WAKE#	2	+3.3V
3	N/C	4	GND
5	N/C	6	+1.5V
7	N/C	8	N/C
9	GND	10	N/C
11	CLK-	12	N/C
13	CLK+	14	N/C
15	GND	16	N/C
17	PCIRST#	18	GND
19	N/C	20	+3.3V
21	GND	22	PCIRST#
23	PERN (SATA_RX+)	24	+3VDual
25	PERP (SATA_RX-)	26	GND
27	GND	28	+1.5V
29	GND	30	SMBCLK
31	PETN (SATA_TX-)	32	SMBDATA
33	PETP (SATA_TX+)	34	GND
35	GND	36	USBD-
37	N/C	38	USBD+
39	N/C	40	GND
41	N/C	42	N/C
43	N/C	44	N/C
45	N/C	46	N/C

PIN NO.	DESCRIPTION	PIN NO.	DESCRIPTION
47	N/C	48	+1.5V
49	N/C	50	GND
51	MSATA_SEL#	52	+3.3V

Table 6-12: PCIe Mini Slots (MINI_PCIE1, MSATA1) Pinouts

6.2.12 Power Connector (PWR2)

PIN NO.	DESCRIPTION
1	GND
2	GND
3	+12V
4	+12V

Table 6-13: Power Connector (PWR2) Pinouts

6.2.13 RS-232 Serial Ports (COM3, COM4, COM5)

PIN NO.	DESCRIPTION	PIN NO.	DESCRIPTION
1	DCD	2	DSR
3	SIN	4	RTS
5	SOUT	6	CTS
7	DTR	8	RI
9	GND	10	GND

Table 6-14: RS-232 Serial Ports (COM3, COM4, COM5) Pinouts

6.2.14 RS-232/422/485 Serial Port (COM6)

Pin	RS-232	RS-422	RS-485
1	DCD	TX-	D-
2	DSR		
3	SIN	TX+	D+
4	RTS		
5	SOUT	RX+	
6	CTS		
7	DTR	RX-	
8	RI		
9	GND		
10	GND		

Table 6-15: RS-232/422/485 Serial Port (COM6) Pinouts

6.2.15 SATA Connector (SATA1)

SATA			
PIN NO.	DESCRIPTION	PIN NO.	DESCRIPTION
S1	GND	S2	SATA_TX+
S3	SATA_TX-	S4	GND
S5	SATA_RX-	S6	SATA_RX+
S7	GND		
SATA Power			
PIN NO.	DESCRIPTION	PIN NO.	DESCRIPTION
P1	NC	P2	+5V
P3	+5V	P4	NC
P5	GND	P6	GND

Table 6-16: SATA Connector (SATA1) Pinouts

6.2.16 SMBus Connector (J_SMB1)

PIN NO.	DESCRIPTION
1	GND
2	SMB_DATA
3	SMB_CLK
4	+5V

Table 6-17: SMBus Connector (J_SMB1) Pinouts

6.2.17 SPI Flash Connector, BIOS (J_SPI1)

PIN NO.	DESCRIPTION	PIN NO.	DESCRIPTION
1	+V3.3M_SPI_CON	2	SPI_CS
3	SPI_SO_SW	4	SPI_CLK_SW
5	SPI_SI_SW	6	GND

Table 6-18: SPI Flash Connector (J_SPI1) Pinouts

6.2.18 SPI Flash Connector, EC (JSPI1)

PIN NO.	DESCRIPTION
1	+V3.3M_SPI_CON_EC
2	SPI_CS _EC
3	SPI_SO_EC
4	SPI_CLK_EC
5	SPI_SI_EC
6	GND

Table 6-19: SPI Flash Connector (JSPI1) Pinouts

6.2.19 USB 2.0 Connector (J_USB1)

PIN NO.	DESCRIPTION	PIN NO.	DESCRIPTION
1	VCC	2	GND
3	USB_DATA-	4	USB_DATA+
5	USB_DATA+	6	USB_DATA-
7	GND	8	VCC

Table 6-20: USB 2.0 Connector (J_USB1) Pinouts

6.3 External Interface Panel Connectors

The table below lists the rear panel connectors on the IDS-300-BW motherboard. Pinouts for these connectors can be found in **Section 3.9: External Peripheral Interface Connection**.

Connector	Type	Label
Ethernet connectors	RJ-45	LAN1, LAN2
HDMI connectors	HDMI port	HDMI1, HDMI2, HDMI3
Power connector	4-pin DIN connector	PWR1
RS-232 connector	RJ-45	COM1, COM2
USB 3.0 connectors	USB 3.0 port	USB1, USB2

Table 6-21: External Interface Panel Connectors

Appendix

A

Regulatory Compliance

DECLARATION OF CONFORMITY

This equipment is in conformity with the following EU directives:

- EMC Directive (2004/108/EC, 2014/30/EU)
- Low-Voltage Directive (2006/95/EC, 2014/35/EU)
- RoHS II Directive (2011/65/EU, 2015/863/EU)
- Ecodesign Directive 2009/125/EC

If the user modifies and/or install other devices in the equipment, the CE conformity declaration may no longer apply.

If this equipment has telecommunications functionality, it also complies with the requirements of the Radio Equipment Directive 2014/53/EU.

English IEI Integration Corp declares that this equipment is in compliance with the essential requirements and other relevant provisions of Directive 2014/53/EU.
Български [Bulgarian] IEI Integration Corp. декларира, че този оборудване е в съответствие със съществените изисквания и другите приложими правила на Директива 2014/53/EU.
Česky [Czech] IEI Integration Corp tímto prohlašuje, že tento zařízení je ve shodě se základními požadavky a dalšími příslušnými ustanoveními směrnice 2014/53/EU.
Dansk [Danish] IEI Integration Corp erklærer herved, at følgende udstyr overholder de væsentlige krav og øvrige relevante krav i direktiv 2014/53/EU.
Deutsch [German] IEI Integration Corp, erklärt dieses Gerät entspricht den grundlegenden Anforderungen und den weiteren entsprechenden Vorgaben der Richtlinie 2014/53/EU.
Eesti [Estonian] IEI Integration Corp deklareerib seadme seadme vastavust direktiivi 2014/53/EÜ põhinõuetele ja nimetatud direktiivist tulenevatele teistele asjakohastele sätetele.

Español [Spanish] IEI Integration Corp declara que el equipo cumple con los requisitos esenciales y cualesquiera otras disposiciones aplicables o exigibles de la Directiva 2014/53/EU.
Ελληνική [Greek] IEI Integration Corp ΔΗΛΩΝΕΙ ΟΤΙ ΕΞΟΠΛΙΣΜΟΣ ΣΥΜΜΟΡΦΩΝΕΤΑΙ ΠΡΟΣ ΤΙΣ ΟΥΣΙΩΔΕΙΣ ΑΠΑΙΤΗΣΕΙΣ ΚΑΙ ΤΙΣ ΛΟΙΠΕΣ ΣΧΕΤΙΚΕΣ ΔΙΑΤΑΞΕΙΣ ΤΗΣ ΟΔΗΓΙΑΣ 2014/53/EU.
Français [French] IEI Integration Corp déclare que l'appareil est conforme aux exigences essentielles et aux autres dispositions pertinentes de la directive 2014/53/EU.
Italiano [Italian] IEI Integration Corp dichiara che questo apparecchio è conforme ai requisiti essenziali ed alle altre disposizioni pertinenti stabilite dalla direttiva 2014/53/EU.
Latviski [Latvian] IEI Integration Corp deklarē, ka iekārta atbilst būtiskajām prasībām un citiem ar to saistītajiem noteikumiem Direktīvas 2014/53/EU.
Lietuvių [Lithuanian] IEI Integration Corp deklaruoja, kad šis įranga atitinka esminius reikalavimus ir kitas 2014/53/EU Direktyvos nuostatas.
Nederlands [Dutch] IEI Integration Corp dat het toestel toestel in overeenstemming is met de essentiële eisen en de andere relevante bepalingen van richtlijn 2014/53/EU.
Malti [Maltese] IEI Integration Corp jiddikjara li dan prodott jikkonforma mal-ħtiġijiet essenzjali u ma provvedimenti oħrajn relevanti li hemm fid-Dirrettiva 2014/53/EU.
Magyar [Hungarian] IEI Integration Corp nyilatkozom, hogy a berendezés megfelel a vonatkozó alapvető követelményeknek és az 2014/53/EU irányelv egyéb előírásainak.
Polski [Polish] IEI Integration Corp oświadcza, że wyrobu jest zgodny z zasadniczymi wymogami oraz pozostałymi stosownymi postanowieniami Dyrektywy 2014/53/EU.
Português [Portuguese] IEI Integration Corp declara que este equipamento está conforme com os requisitos essenciais e outras disposições da Directiva 2014/53/EU.

Româna [Romanian] IEI Integration Corp declară că acest echipament este in conformitate cu cerințele esențiale şi cu celelalte prevederi relevante ale Directivei 2014/53/EU.
Slovensko [Slovenian] IEI Integration Corp izjavlja, da je ta opreme v skladu z bistvenimi zahtevami in ostalimi relevantnimi določili direktive 2014/53/EU.
Slovensky [Slovak] IEI Integration Corp týmto vyhlasuje, že zariadenia spĺňa základné požiadavky a všetky príslušné ustanovenia Smernice 2014/53/EU.
Suomi [Finnish] IEI Integration Corp vakuuttaa täten että laitteet on direktiivin 2014/53/EU oleellisten vaatimusten ja sitä koskevien direktiivin muiden ehtojen mukainen.
Svenska [Swedish] IEI Integration Corp förklarar att denna utrustningstyp står I överensstämmelse med de väsentliga egenskapskrav och övriga relevanta bestämmelser som framgår av direktiv 2014/53/EU.

FCC WARNING

This equipment complies with Part 15 of the FCC Rules. Operation is subject to the following two conditions:

- This device may not cause harmful interference, and
- This device must accept any interference received, including interference that may cause undesired operation.

This equipment has been tested and found to comply with the limits for a Class A digital device, pursuant to part 15 of the FCC Rules. These limits are designed to provide reasonable protection against harmful interference when the equipment is operated in a commercial environment. This equipment generates, uses, and can radiate radio frequency energy and, if not installed and used in accordance with the instruction manual, may cause harmful interference to radio communications. Operation of this equipment in a residential area is likely to cause harmful interference in which case the user will be required to correct the interference at his own expense.

Federal Communication Commission Interference Statement

This equipment has been assembled with components that comply with the limits for a Class B digital device, pursuant to Part 15 of the FCC Rules. These limits are designed to provide reasonable protection against harmful interference in a residential installation. This equipment generates, uses and can radiate radio frequency energy and, if not installed and used in accordance with the instructions, may cause harmful interference to radio communications. However, there is no guarantee that interference will not occur in a particular installation. If this equipment does cause harmful interference to radio or television reception, which can be determined by turning the equipment off and on, the user is encouraged to try to correct the interference by one of the following measures:

- Reorient or relocate the receiving antenna.
- Increase the separation between the equipment and receiver.
- Connect the equipment into an outlet on a circuit different from that to which the receiver is connected.
- Consult the dealer or an experienced radio/TV technician for help.

Appendix

B

Safety Precautions

WARNING:

The precautions outlined in this chapter should be strictly followed. Failure to follow these precautions may result in permanent damage to the IDS-300-BW.

B.1 Safety Precautions

Please follow the safety precautions outlined in the sections that follow:

B.1.1 General Safety Precautions

Please ensure the following safety precautions are adhered to at all times.

- ***Follow the electrostatic precautions*** outlined below whenever the device is opened.
- ***Make sure the power is turned off and the power cord is disconnected*** whenever the IDS-300-BW is being installed, moved or modified.
- ***To prevent the risk of electric shock, make sure power cord is unplugged from wall socket.*** To fully disengage the power to the unit, please disconnect the power cord from the AC outlet. Refer servicing to qualified service personnel. The AC outlet shall be readily available and accessible.
- ***Do not apply voltage levels that exceed the specified voltage range***. Doing so may cause fire and/or an electrical shock. Use a power cord that matches the voltage of the power outlet, which has been approved and complies with the safety standard of your particular country.
- ***Electric shocks can occur*** if the IDS-300-BW chassis is opened when it is running. To avoid risk of electric shock, this device must only be connected to a supply mains with protective earth.
- ***Do not drop or insert any objects*** into the ventilation openings of the IDS-300-BW.

- ***If considerable amounts of dust, water, or fluids enter the* device**, turn off the power supply immediately, unplug the power cord, and contact the IDS-300-BW vendor.
- **DO NOT**:
  - Drop the device against a hard surface.
  - In a site where the ambient temperature exceeds the rated temperature

B.1.2 Anti-static Precautions

WARNING:

Failure to take ESD precautions during the installation of the IDS-300-BW may result in permanent damage to the IDS-300-BW and severe injury to the user.

Electrostatic discharge (ESD) can cause serious damage to electronic components, including the IDS-300-BW. Dry climates are especially susceptible to ESD. It is therefore critical that whenever the IDS-300-BW is opened and any of the electrical components are handled, the following anti-static precautions are strictly adhered to.

- ***Wear an anti-static wristband***: Wearing a simple anti-static wristband can help to prevent ESD from damaging any electrical component.
- ***Self-grounding***: Before handling any electrical component, touch any grounded conducting material. During the time the electrical component is handled, frequently touch any conducting materials that are connected to the ground.
- ***Use an anti-static pad***: When configuring or working with an electrical component, place it on an anti-static pad. This reduces the possibility of ESD damage.
- ***Only handle the edges of the electrical component***: When handling the electrical component, hold the electrical component by its edges.

B.1.3 Product Disposal

CAUTION:

Risk of explosion if battery is replaced by an incorrect type. Only certified engineers should replace the on-board battery.

Dispose of used batteries according to instructions and local regulations.

- Outside the European Union – If you wish to dispose of used electrical and electronic products outside the European Union, please contact your local authority so as to comply with the correct disposal method.
- Within the European Union – The device that produces less waste and is easier to recycle is classified as electronic device in terms of the European Directive 2012/19/EU (WEEE), and must not be disposed of as domestic garbage.

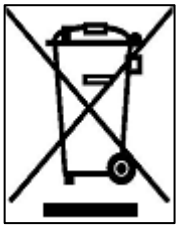

EU-wide legislation, as implemented in each Member State, requires that waste electrical and electronic products carrying the mark (left) must be disposed of separately from normal household waste. This includes monitors and electrical accessories, such as signal cables or power cords. When you need to dispose of your display products, please follow the guidance of your local authority, or ask the shop where you purchased the product. The mark on electrical and electronic products only applies to the current European Union Member States.

Please follow the national guidelines for electrical and electronic product disposal.

B.2 Maintenance and Cleaning Precautions

When maintaining or cleaning the IDS-300-BW, please follow the guidelines below.

WARNING:

- For safety reasons, turn-off the power and unplug the embedded system before cleaning.
- If you dropped any material or liquid such as water onto the IDS-300-BW when cleaning, unplug the power cable immediately and contact your dealer or the nearest service center. Always make sure your hands are dry when unplugging the power cable.

B.2.1 Maintenance and Cleaning

Prior to cleaning any part or component of the IDS-300-BW, please read the details below.

- Never spray or squirt liquids directly onto any other components.
- The interior of the device does not require cleaning. Keep fluids away from the device interior.
- Be cautious of all small removable components when vacuuming the device.
- Never drop any objects or liquids through the openings of the device.
- Be cautious of any possible allergic reactions to solvents or chemicals used when cleaning the device.
- Avoid eating, drinking and smoking within vicinity of the device.

B.2.2 Cleaning Tools

Some components in the IDS-300-BW may only be cleaned using a product specifically designed for the purpose. In such case, the product will be explicitly mentioned in the cleaning tips. Below is a list of items to use when cleaning the IDS-300-BW.

- ***Cloth*** – Although paper towels or tissues can be used, a soft, clean piece of cloth is recommended when cleaning the device.
- ***Water or rubbing alcohol*** – A cloth moistened with water or rubbing alcohol can be used to clean the device.
- ***Using solvents*** – The use of solvents is not recommended when cleaning the

device as they may damage the plastic parts.

- ***Vacuum cleaner*** – Using a vacuum specifically designed for computers is one of the best methods of cleaning the device. Dust and dirt can restrict the airflow in the device and cause its circuitry to corrode.
- ***Cotton swabs*** – Cotton swaps moistened with rubbing alcohol or water are excellent tools for wiping hard to reach areas.
- **Foam swabs** – Whenever possible, it is best to use lint free swabs such as foam swabs for cleaning.

Appendix

C

BIOS Menu Options

C.1 BIOS Configuration Options

Below is a list of BIOS configuration options described in **Chapter 4**.

Appendix

D

Watchdog Timer

NOTE:

The following discussion applies to DOS environment. IEI support is contacted or the IEI website visited for specific drivers for more sophisticated operating systems, e.g., Windows and Linux.

The Watchdog Timer is provided to ensure that standalone systems can always recover from catastrophic conditions that cause the CPU to crash. This condition may have occurred by external EMI or a software bug. When the CPU stops working correctly, Watchdog Timer either performs a hardware reset (cold boot) or a Non-Maskable Interrupt (NMI) to bring the system back to a known state.

A BIOS function call (INT 15H) is used to control the Watchdog Timer:

INT 15H:

AH – 6FH Sub-function:	
AL – 2:	Sets the Watchdog Timer's period.
BL:	Time-out value (Its unit-second is dependent on the item "Watchdog Timer unit select" in CMOS setup).

Table D-1: AH-6FH Sub-function

Call sub-function 2 to set the time-out period of Watchdog Timer first. If the time-out value is not zero, the Watchdog Timer starts counting down. While the timer value reaches zero, the system resets. To ensure that this reset condition does not occur, calling sub-function 2 must periodically refresh the Watchdog Timer. However, the Watchdog timer is disabled if the time-out value is set to zero.

A tolerance of at least 10% must be maintained to avoid unknown routines within the operating system (DOS), such as disk I/O that can be very time-consuming.

NOTE:

When exiting a program it is necessary to disable the Watchdog Timer, otherwise the system resets.

Example program:

```
; INITIAL TIMER PERIOD COUNTER
;
W_LOOP:

        MOV     AX, 6F02H       ;setting the time-out value
        MOV     BL, 30          ;time-out value is 48 seconds
        INT      15H
 ;
; ADD THE APPLICATION PROGRAM HERE
;
        CMP     EXIT_AP, 1      ;is the application over?
        JNE      W_LOOP     ;No, restart the application

        MOV    AX, 6F02H     ;disable Watchdog Timer
        MOV    BL, 0         ;
        INT      15H
;
; EXIT ;
```

Appendix

E

Hazardous Materials Disclosure

The details provided in this appendix are to ensure that the product is compliant with the Peoples Republic of China (China) RoHS standards. The table below acknowledges the presences of small quantities of certain materials in the product, and is applicable to China RoHS only.

A label will be placed on each product to indicate the estimated "Environmentally Friendly Use Period" (EFUP). This is an estimate of the number of years that these substances would "not leak out or undergo abrupt change." This product may contain replaceable sub-assemblies/components which have a shorter EFUP such as batteries and lamps. These components will be separately marked.

Please refer to the following table.

Part Name	Toxic or Hazardous Substances and Elements					
	Lead (Pb)	Mercury (Hg)	Cadmium (Cd)	Hexavalent Chromium (CR(VI))	Polybrominated Biphenyls (PBB)	Polybrominated Diphenyl Ethers (PBDE)
Housing	O	O	O	O	O	O
Display	O	O	O	O	O	O
Printed Circuit Board	O	O	O	O	O	O
Metal Fasteners	O	O	O	O	O	O
Cable Assembly	O	O	O	O	O	O
Fan Assembly	O	O	O	O	O	O
Power Supply Assemblies	O	O	O	O	O	O
Battery	O	O	O	O	O	O

O: This toxic or hazardous substance is contained in all of the homogeneous materials for the part is below the limit requirement in SJ/T11363-2006 (now replaced by GB/T 26572-2011).

X: This toxic or hazardous substance is contained in at least one of the homogeneous materials for this part is above the limit requirement in SJ/T11363-2006 (now replaced by GB/T 26572-2011).

此附件旨在确保本产品符合中国 RoHS 标准。以下表格标示此产品中某有毒物质的含量符合中国 RoHS 标准规定的限量要求。

本产品上会附有"环境友好使用期限"的标签，此期限是估算这些物质"不会有泄漏或突变"的年限。本产品可能包含有较短的环境友好使用期限的可替换元件，像是电池或灯管，这些元件将会单独标示出来。

部件名称	有毒有害物质或元素					
	铅 (Pb)	汞 (Hg)	镉 (Cd)	六价铬 (CR(VI))	多溴联苯 (PBB)	多溴二苯醚 (PBDE)
壳体	O	O	O	O	O	O
显示	O	O	O	O	O	O
印刷电路板	O	O	O	O	O	O
金属螺帽	O	O	O	O	O	O
电缆组装	O	O	O	O	O	O
风扇组装	O	O	O	O	O	O
电力供应组装	O	O	O	O	O	O
电池	O	O	O	O	O	O
O: 表示该有毒有害物质在该部件所有物质材料中的含量均在 SJ/T 11363-2006 (现由 GB/T 26572-2011 取代) 标准规定的限量要求以下。 X: 表示该有毒有害物质至少在该部件的某一均质材料中的含量超出 SJ/T 11363-2006 (现由 GB/T 26572-2011 取代) 标准规定的限量要求。						