FSP TECHNOLOGY INC.

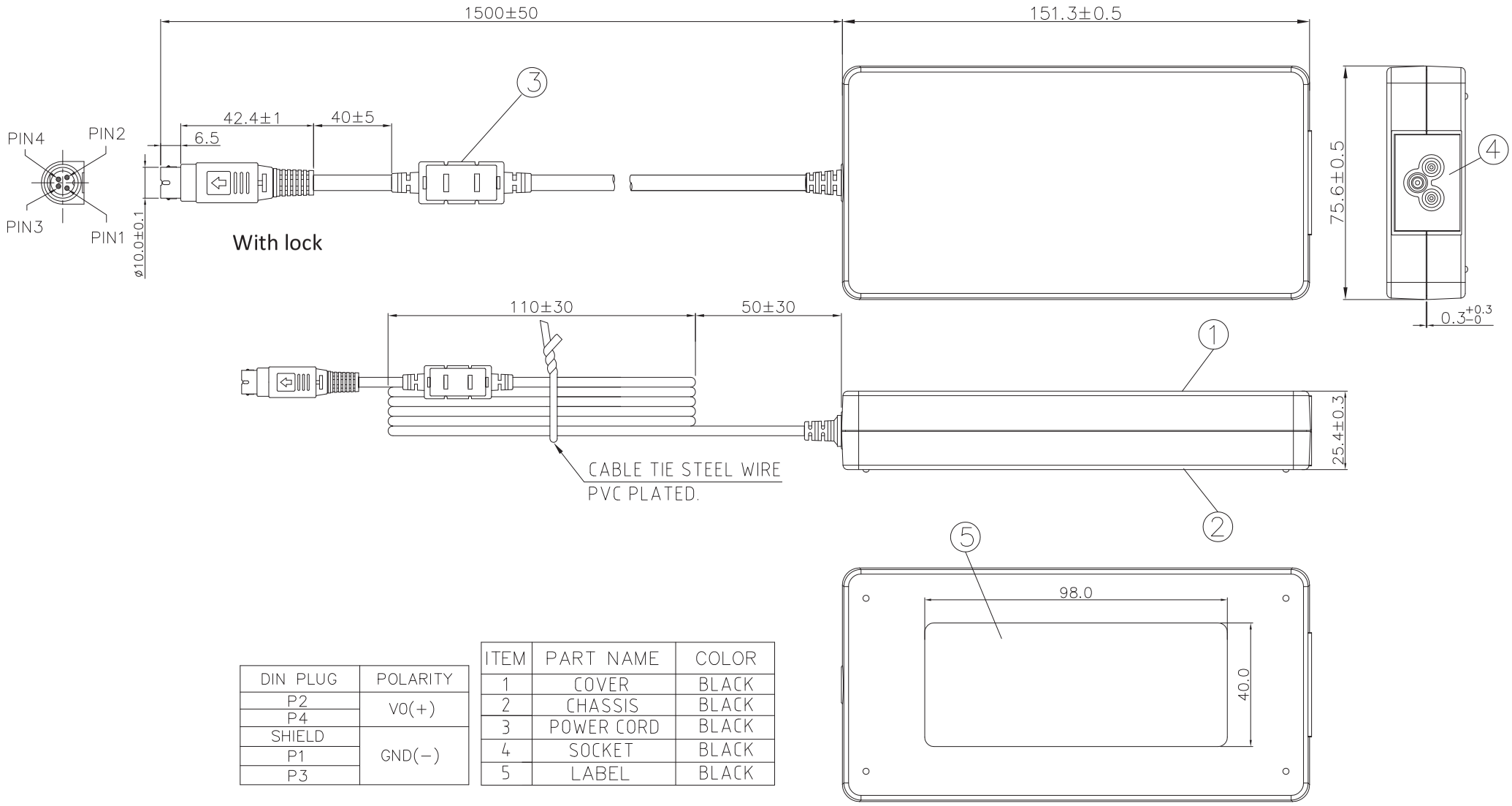

DIN PLUG	POLARITY
P2	VO(+)
P4	
SHIELD	GND(−)
P1	
P3	

ITEM	PART NAME	COLOR
1	COVER	BLACK
2	CHASSIS	BLACK
3	POWER CORD	BLACK
4	SOCKET	BLACK
5	LABEL	BLACK

P/N.: 9NA1205302

THIRD ANGLE PROJECTION

SCALE:
UNIT: mm

DIMENSIONAL TOLERANCES — HOLES : ±0.05 ANGLES : ±0.5°

( )	( )	( )		( )
<30 :±0.2	DECIMALS	UP~100 :±0.2	250~300 :±0.4	UP~600 :±1.5
>30~100 :±0.3	X :±0.8	100~150 :±0.25	300~350 :±0.45	600~900 :±2.4
>100~200 :±0.4	X.X :±0.5	150~200 :±0.3	350~400 :±0.5	900~OVER :±3.1
>200~300 :±0.5	X.XX:±0.3	200~250:±0.35		
ABOVE 300:±0.8				

MODEL NO. : FSP120-ABBN2		TITLE: Physical Dimension	SHEET: 1 OF1	REV:01
R&D3 Division	P E	ME	DATE	
L.J	Annie	MATISSE	2015-01-15	
INTERIOR COUNTERSIGN:				

Mechanical Drawing (外觀/機構圖) 表單編號:7000P-0111

ICP Deutschland GmbH | +49(0)7121-14323-20 | sales@icp-deutschland.de | www.icp-deutschland.de