Cervoz Industrial Embedded Module

M.2 2280

Reliance Series (RO-MLC)

R335 Family

Product Datasheet

Revision History

Date	Revision	Description
2022.01.24	1.0	First Released

Table of Contents

1. Product Overview……4
1.1 Introduction……4
1.2 Feature……4
1.3 Product Appearance & Models……5

2. Product Specifications……6
2.1 General Specifications……6
2.2 Performance……7
2.3 Drive Capacity……7
2.4 Electronic Specifications……7
2.4.1 Block Diagram……7
2.4.2 Pin Assignment……8-9
2.5 Environmental Specifications……10
2.6 Mechanical Specifications……10

3. Supported Command……11
3.1 List of Command Sets……11~12

4. Part No. Decoder……13
4.1 Part No. Decoder……13~14

1. Product Overview

1.1 Introduction

Cervoz Industrial M.2 2280 Embedded Module R335 family is a Solid State Flash Disk product that is in compliance with the M.2 and SATA III standards. M.2 2280 R335 family fits in any M.2 2280 sockets in a PC or motherboard; it can be used for both booting and storage purposes.

R335 family uses preselected multi-level cell (MLC) NAND flash memory from the industry leading manufacturer Micron and utilizes our “Reliability Optimized-MLC (RO-MLC) Technology”. We adopt specialized firmware to control MLC NAND flash which only uses the strong pages of MLC NAND as storage; the technology is manipulated at the block level, and with each block's capacity halved by treating it as SLC. This product includes various capacities to choose from.

R335 family offers high performance with reliability and endurance, as well as a remarkable price-performance ratio, ideal for applications in harsh environments. Industrial PC/Embedded PC, Factory Automation, Transportation, Information & Entertainment and Server & Cloud Computing all benefit from this superior reliability and cost-effectiveness.

1.2 Application Fields

- Industrial PC and Thin Client
- Ticketing, Examining and Testing Machine
- Military, Health and Automatic Equipment
- Server, Cloud Computer

1.3 Features

- Compliant with SATA III 6.0Gb/s (backward compatible to 1.5Gb/s and 3Gb/s)
- MLC NAND flash memory with RO-MLC technology
- Capacity: 16GB ~ 128GB
- With DRAM Buffer
- Operating as boot disk
- Low power consumption
- Shock resistance and anti-vibration
- Static and dynamic wear leveling
- Bad block management
- S.M.A.R.T. & TRIM command
- Fully compatible with Windows XP, Windows 7, Windows 8, Windows 10, Mac OS, and Linux
- RoHS compliant

1.4 Product Appearance & Models

Cervoz Industrial M.2 2280 Module R335

R335 Family Standard Temp. (0°C ~ 70°C) Model No.	R335 Family Wide Temp. (-40°C ~ 85°C) Model No.	Capacity
CIE-M8R335MKD016GS	CIE-M8R335MKD016GW	16GB
CIE-M8R335MKD032GS	CIE-M8R335MKD032GW	32GB
CIE-M8R335MKD064GS	CIE-M8R335MKD064GW	64GB
CIE-M8R335MLD128GS	CIE-M8R335MLD128GW	128GB

Please Note:

Since certain storage capacity has to be reserved for firmware and controller management purposes; the physical capacity of the SATA flash module will be approximately 92.5% of the indicated capacity. If you need to install an image that has the exact (or close to) the indicated size of the flash module, please choose your flash module with a greater capacity.

2. Product Specifications

2.1 General Specifications

Form Factor	M.2 2280
Interface	SATA III 6.0Gb/s (backward compatible to 3.0Gb/s, 1.5Gb/s)
Connector	M.2
NAND Flash Type	MLC (Controlled by Reliability Optimized-MLC Technology)
Capacity	16GB/32GB/64GB/128GB
Sequential Read	up to 510MB/s
Sequential Write	up to 465MB/s
DDR3 DRAM Buffer	Included
ECC Scheme	up to 66bits / 1K Byte
MTBF	>3,000,000 hours
TeraByte Written (TBW)	16GB : 130.2 32GB : 260.4 64GB : 520.8 128GB : 1041.7
Low Power Management	DIPM/HIPM mode
Supply Voltage	3.3V DC +/-5%
Power Consumption	Active mode: < 2295mW Idle mode: < 390mW Slumber mode: <70mW
Dimension (LxWxH)	80.00*22.00*3.90mm

2.2 Performance

The performance was measured with below PC configuration:

- Platform: GIGABYTE GA-Z170-HD3P
- RAM: Cervoz CIR-S4DUSS2404G (DDR4 4G 2400MHz)
- Operation Systems: Windows 10
- Testing Utility: Crystal Disk Mark v5.1.0 x64
- SATAIII port (6.0 Gb/s) performance

Capacity	16GB	32GB	64GB	128GB
Sequential Read (max.)	300MB/s	510MB/s	510MB/s	510MB/s
Sequential Write (max.)	155MB/s	305MB/s	455MB/s	465MB/s
4KB Random Read (QD32)	100MB/s	190MB/s	275MB/s	285MB/s
4KB Random Write (QD32)	155MB/s	310MB/s	315MB/s	295MB/s

Actual performance might differ based on different using conditions and environment.

2.3 Drive Capacity

Capacity	Cylinders	Heads	Sectors	Max LBA
16GB	16,383	16	63	31,277,232
32GB	16,383	16	63	62,533,296
64GB	16,383	16	63	125,045,424
128GB	16,383	16	63	250,069,680

2.4 Electronic Specifications

2.4.1 Block Diagram

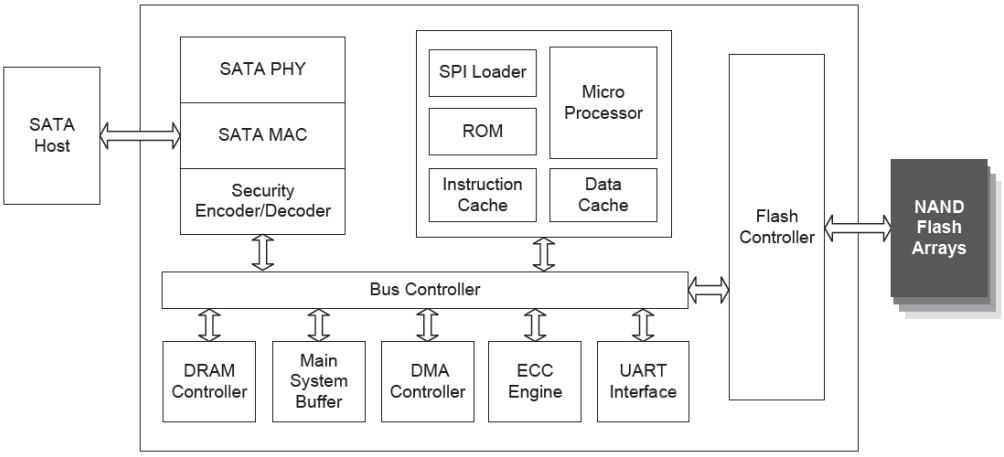

2.4.2 Pin Assignment

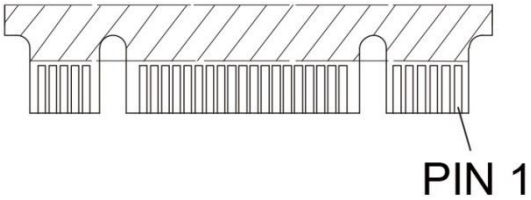

Pin #	Pin Description	Signal Name	Pin #	Pin Description	Signal Name
1	Ground	CONFIG_3 = GND	12	Module Key	Key
2	3.3V power in	+3.3V	13	Module Key	Key
3	Ground	GND	14	Module Key	Key
4	3.3V power in	+3.3V	15	Module Key	Key
5	Not Used	NC	16	Module Key	Key
6	Not Used	NC	17	Module Key	Key
7	Not Used	NC	18	Module Key	Key
8	Not Used	NC	19	Module Key	Key
9	Not Used or Ground	NC or GND [Note]	20	Not Used	NC
10	LED/DAS/DSS	DAS/DSS# (O) (OD)	21	Ground	CONFIG_0 = GND
11	Not Used	NC	22	Not Used	NC
Pin #	**Pin Description**	**Signal Name**	**Pin #**	**Pin Description**	**Signal Name**
23	Not Used	NC	50	Not Used	NC
24	Not Used	NC	51	Ground	GND
25	Not Used	NC	52	Not Used	NC
26	Not Used	NC	53	Not Used	NC
27	Ground	GND	54	Not Used	NC
28	Not Used	NC	55	Not Used	NC
29	Not Used	NC	56	MFG Data	NC
30	Not Used	NC	57	Ground	GND
31	Not Used	NC	58	MFG Clock	NC
32	Not Used	NC	59	Module Key	Key
33	Ground	GND	60	Module Key	Key
34	Not Used	NC	61	Module Key	Key
35	Not Used	NC	62	Module Key	Key
36	Not Used	NC	63	Module Key	Key
37	Not Used	NC	64	Module Key	Key
38	Enter/Exit Device Sleep	DEVSLP (I) (0/3.3V)	65	Module Key	Key

39	Ground	GND	66	Module Key	Key
40	Not Used	NC	67	Not Used	NC
41	SATA Txp	+B – TX+	68	32kHz clock supply	SUSCLK (I) (0/3.3V)
42	Not Used	NC	69	Defines module type	CONFIG_1 = GND
43	SATA Txn	-B – TX-	70	3.3V power in	+3.3V
44	Not Used	NC	71	Ground	GND
45	Ground	GND	72	3.3V power in	+3.3V
46	Not Used	NC	73	Ground	GND
47	SATA Rxn	-A – RX-	74	3.3V power in	+3.3V
48	Not Used	NC	75	Ground	CONFIG_2 = GND
49	SATA Rxp	+A – RX+			

Note: NC for Socket 2, and GND for Socket 3.

2.5 Environmental Specifications

Type		Value
Temperature	Standard Temperature Operating: Standard Temperature Storage: Wide Temperature Operating: Wide Temperature Storage:	0˚C~70˚C -40˚C~85˚C -40˚C~85˚C -50˚C~95˚C
Humidity	Operating & Storage	10~95%, Non-Condensing
Vibration	Non-Operating	20G, 10Hz~2000Hz
Shock	Non-Operating	1500G, 0.5ms

2.6 Mechanical Specifications

Type	Value
Form Factor	M.2 2280
Length	80.00mm +/-0.15mm
Width	22.00mm +/-0.15mm
Thickness	3.90mm +/-0.08mm

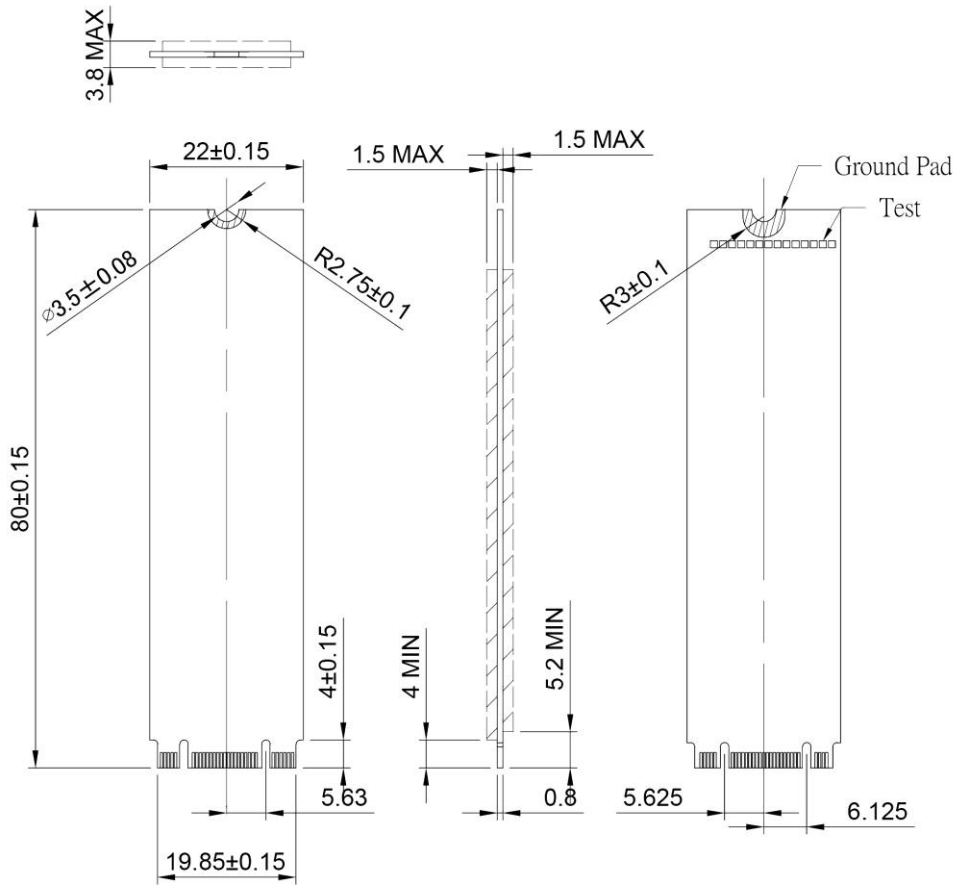

3. Supported Command

3.1 List of Command Sets

Code	Description	Code	Description
00h	NOP	B0h, D1h	SMART READ DATA ATTRIBUTE THRESHOLD
06h	Data Set Management	B0h, D2h	SMART ENABLE/DISABLE ATTRIBUTE AUTOSAVE
10h	Recalibrate	B0h, D3h	SMART SAVE ATTRIBUTE VALUES
20h	Read Sectors	B0h, D4h	SMART EXECUTE OFF-LINE IMMEDIATE
21h	Read Sectors without Retry	B0h, D5h	SMART READ LOG
24h	Read Sectors EXT	B0h, D6h	SMART WRITE LOG
25h	Read DMA EXT	B0h, D8h	SMART ENABLE OPERATIONS
27h	Read Native Max Address EXT	B0h, D9h	SMART DISABLE OPERATIONS
29h	Read Multiple EXT	B0h, DAh	SMART RETURN STATUS
2Fh	Read Log EXT	B0h, DBh	SMART ENABLE/DISABLE AUTOMATIC OFF-LINE
30h	Write Sectors	B1h	DEVICE CONFIGURATION OVERLAY
31h	Write Sectors without Retry	B1h, C0h	DEVICE CONFIGURATION RESTORE
34h	Write Sectors EXT	B1h, C1h	DEVICE CONFIGURATION FREEZE LOCK
35h	Write DMA EXT	B1h, C2h	DEVICE CONFIGURATION IDENTIFY
37h	Set Native Max Address EXT	B1h, C3h	DEVICE CONFIGURATION SET
39h	Write Multiple EXT	B1h, C4h	DEVICE CONFIGURATION IDENTIFY DMA
3Dh	Write DMA FUA EXT	B1h, C5h	DEVICE CONFIGURATION SET DMA
3Fh	Write Long EXT	C4h	Read Multiple
40h	Read Verify Sectors	C5h	Write Multiple
41h	Read Verify Sectors without Retry	C6h	Set Multiple Mode
42h	Read Verify Sectors EXT	C8h	Read DMA
45h	Write Uncorrectable EXT	C9h	Read DMA without Retry
47h	Read Log DMA EXT	CAh	Write DMA
57h	Write Log DMA EXT	CBh	Write DMA without Retry
60h	Read FPDMA Queued	CEh	Write Multiple FUA EXT
61h	Write FPDMA Queued	E0h	Standby Immediate
70h	Seek	E1h	Idle Immediate
90h	Execute Device Diagnostic	E2h	Standby
91h	Initialize Device Parameters	E3h	Idle
92h	Download Microcode	E4h	Read Buffer
93h	Download Microcode DMA	E5h	Check Power Mode
B0h	SMART	E6h	Sleep
B0h, D0h	SMART READ DATA	E7h	Flush Cache

Code	Description	Code	Description
E8h	Write Buffer	Efh, 82h	Disable write cache
E9h	Read Buffer DMA	Efh, 85h	Disable advanced power management
EAh	Flush Cache EXT	Efh, 90h	Disable use of Serial ATA feature set
EBh	Write Buffer DMA	Efh, 90h, 02h	Disable DMA Setup FIS Auto-Activate optimization
ECh	Identify Device	Efh, 90h, 03h	Disable Device-initiated interface power state (DIPM) transitions
EFh	Set Features	Efh, 90h, 06h	Disable Software Settings Preservation (SSP)
Efh, 02h	Enable 8-bit PIO transfer mode	Efh, 90h, 07h	Disable Device Automatic Partial to Slumber transitions
Efh, 03h	Set transfer mode based on value in Count field	Efh, 90h, 09h	Disable Device Sleep
Efh, 05h	Enable advanced power management	Efh, AAh	Enable read look-ahead feature
Efh, 10h	Enable use of Serial ATA feature	Efh, CCh	Enable reverting to power-on defaults
Efh, 10h, 02h	Enable DMA Setup FIS Auto-Activate optimization	F1h	Security Set Password
Efh, 10h, 03h	Enable Device-initiated interface power state (DIPM) transitions	F2h	Security Unlock
Efh, 10h, 06h	Enable Software Settings Preservation (SSP)	F3h	Security Erase Prepare
Efh, 10h, 07h	Enable Device Automatic Partial to Slumber transitions	F4h	Security Erase Unit
Efh, 10h, 09h	Enable Device Sleep	F5h	Security Freeze Lock
Efh, 55h	Disable read look-ahead feature	F6h	Security Disable Password
Efh, 66h	Disable reverting to power-on defaults	F8h	Read Native Max Address

4. Part No. Decoder

4.1 Part No. Decoder

1	-	2	3	4	5	6	7	8	9
Product Line	-	Form Factor	Product Series	Cervoz Family Code (Bus / Internal Control)	Flash Brand	Flash Capacity	Flash Mode	Module Capacity	Operating Temp.
XXX	-	XX	X	XXX	X	X	X	XXXX	X

1. Product Line

CIS	Cervoz Industrial SSD
CIM	Cervoz Industrial Memory Card
CIE	Cervoz Industrial Embedded Module

2. Form Factor

2S	2.5” SATA
2P	2.5” PATA
CF	CompactFlash
CA	CFast
MS	mSATA
HM	Half Size mSATA
HS	Half Slim
M4	M.2 2242
M6	M.2 2260
M8	M.2 2280
0V	PATA Disk 40pin Vertical
4V	PATA Disk 44pin Vertical
4L	PATA Disk 44pin Horizontal Left
7T	SATA Disk 7pin Vertical Tall
7L	SATA Disk 7pin Horizontal Left
7R	SATA Disk 7pin Horizontal Right

3. Product Series

S	Supreme Series (SLC)
R	Reliance Series (RO-MLC)
M	Momentum Series (MLC)

4. Cervoz Family Code

Bus and Internal Control for Cervoz Product Families

5. Flash Brand

M	Micron
T	Toshiba

6. Flash Capacity

A	256Mb
B	512Mb

C	1Gb
D	2Gb
E	4Gb
F	8Gb
G	16Gb
H	32Gb
I	64Gb
J	128Gb
K	256Gb
L	512Gb
M	1Tb

7. Flash Mode

Internal Control for Flash Mode

8. Module Capacity

128M	128MB
256M	256MB
512M	512MB
001G	1GB
002G	2GB
004G	4GB
008G	8GB
016G	16GB
032G	32GB
064G	64GB
128G	128GB
256G	256GB
512G	512GB

9. Operating Temperature

S	Standard Grade (0~ +70°C)
W	Wide Temperature Grade (-40 ~ +85°C)