Cervoz Industrial Embedded Module

SATA Disk 7pin Vertical Short

Momentum Series (MLC)

M360 Family

Product Datasheet

Revision History

Date	Revision	Description
2017.04.25	1.0	First Released

Table of Contents

1. Product Overview……4
1.1 Introduction……4
1.2 Feature……4
1.3 Product Appearance & Models……5

2. Product Specifications……6
2.1 General Specifications……6
2.2 Performance……6
2.3 Electronic Specifications……7
2.3.1 Block Diagram……7
2.3.2 Pin Assignment……8
2.3.3 Power Cable……8
2.4 Environmental Specifications……9
2.5 Mechanical Specifications……9

3. Part No. Decoder……10
3.1 Part No. Decoder……10~11

1. Product Overview

1.1 Introduction

Cervoz Industrial SATA Disk 7pin Vertical Short Embedded Module M360 family is a Solid State Flash Disk product that is in compliance with the SATA III standards. The SATA Disk 7pin Vertical Short Embedded Module M360 family is in low profile form factor and fits in any SATA sockets internally of a PC or on a motherboard; it can be used for both booting or storage purposes.

M360 family uses superior quality preselected multi-level cell (MLC) NAND flash memory from the industry leading manufacturer Toshiba. This product includes both standard temperature range and wide temperature range options with various capacities to choose from.

M360 family offers outstanding performance and reliability; the product family is a perfect solution for price sensitive semi-industrial and general industrial applications.

1.2 Feature

- Compliant with SATA III 6.0Gb/s
- MLC NAND flash memory
- Capacity: 8GB ~ 64GB
- Operating as boot disk
- Product includes Standard Temperature range & Wide Temperature range
- Static and dynamic wear leveling
- Bad block management
- S.M.A.R.T. & TRIM command

1.3 Product Appearance & Models

Cervoz Industrial SATA Disk 7pin Vertical Short Module M360

M360 Family Standard Temp. (0°C ~ 70°C) Model No.	M360 Family Wide Temp. (-40°C ~ 85°C) Model No.	Capacity
CIE-7SM360TIC008GS	CIE-7SM360TIC008GW	8GB
CIE-7SM360TJC016GS	CIE-7SM360TJC016GW	16GB
CIE-7SM360TKC032GS	CIE-7SM360TKC032GW	32GB
CIE-7SM360TLC064GS	CIE-7SM360TLC064GW	64GB

Please Note:

Since certain storage capacity has to be reserved for firmware and controller management purposes; the physical capacity of the SATA flash module will be approximately 93% of the indicated capacity. If you need to install an image that has the exact (or close to) the indicated size of the flash module, please choose your flash module with a greater capacity.

2. Product Specifications

2.1 General Specifications

Form Factor	SATA Disk 7pin Vertical Short
Interface	SATA III 6.0Gb/s (backward compatible to 3.0Gb/s, 1.5Gb/s)
Connector	SATA (7pin)
NAND Flash Type	MLC
Capacity	8GB / 16GB / 32GB / 64GB
Sequential Read	up to 300MB/s
Sequential Write	up to 65MB/s
ECC Scheme	Applies the LDPC (Low Density Parity Check) of ECC algorithm
MTBF	2,000,000 hours
TeraByte Written (TBW)	8GB : 15.6 16GB : 31.2 32GB : 62.4 64GB : 124.8
Supply Voltage	+5.0V DC +/-5%
Power Consumption	Read : 660 mW (max.) Write: 750 mW (max.) Idle : 5 mW (max.)
Dimension (LxWxH)	29.60*33.06*10.50mm

2.2 Performance

The performance was measured with below PC configuration:

- Platform: ASUS Z97-A (Intel Z97)
- RAM: Cervoz CIR-S3DUSK1604G(DDR3 4G 1600MHz)
- Operation Systems: Windows 7
- Testing Utility: Crystal Disk Mark v5.1.0 X64
- SATAIII port (6.0 Gb/s) performance

Capacity	8GB	16GB	32GB	64GB
Sequential Read (max.)	130MB/s	210MB/s	300MB/s	300MB/s
Sequential Write (max.)	25MB/s	25MB/s	50MB/s	65MB/s
4KB Random Read (QD32)	30MB/s	40MB/s	55MB/s	75MB/s
4KB Random Write (QD32)	25MB/s	20MB/s	45MB/s	55MB/s

Actual performance may vary depending on use conditions and environment

2.3 Electronic Specifications

2.3.1 Block Diagram

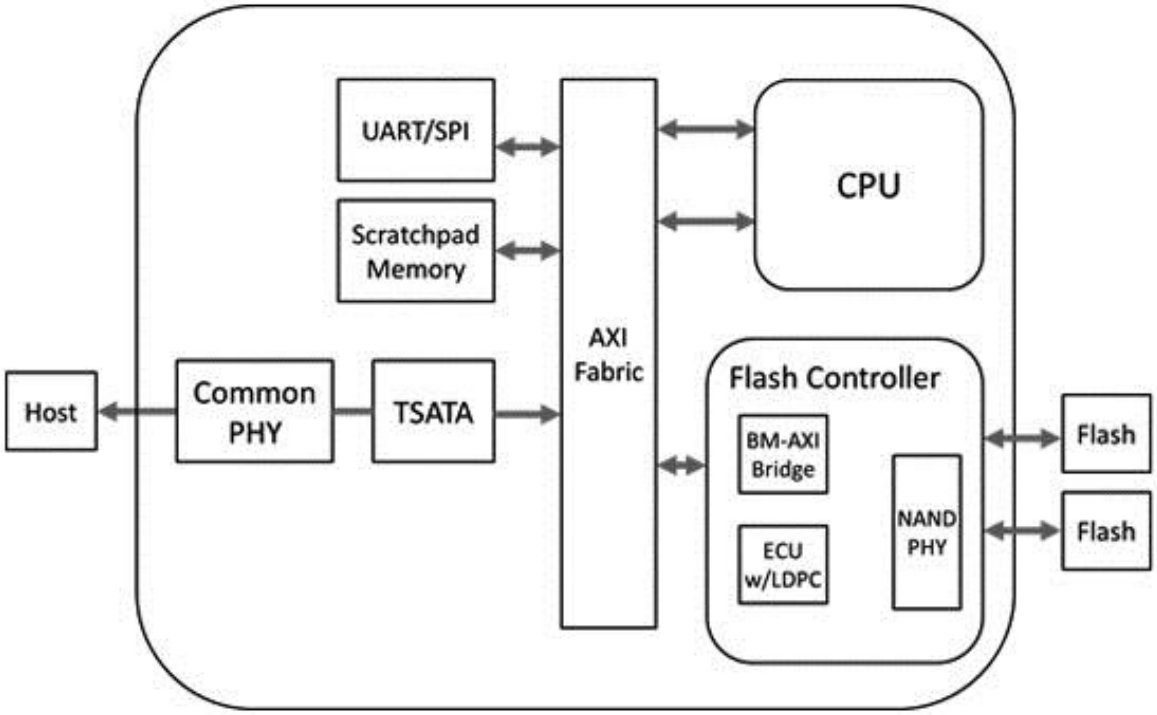

2.3.2 Pin Assignment

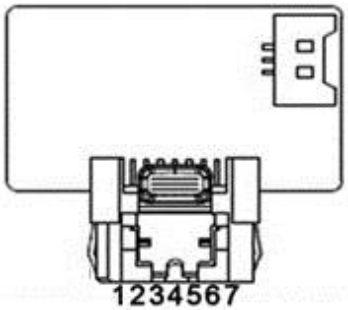

Pin No.	Function	Description
Pin 1	GND	Shielding
Pin 2	A+	Differential signal to A
Pin 3	A-	Differential signal to A-
Pin 4	GND	Shielding
Pin 5	B-	Differential signal to B-
Pin 6	B+	Differential signal to B
Pin 7	GND	Shielding

2.3.3 Power Cable

Each SATA Disk Module will ship with a power cable, which has standard 4 pin power connector and special 3 pin power connector for the SATA Disk Module. The male and female power connector of SATA Disk Module has foolproof design to avoid misconnection, please check it before power on.

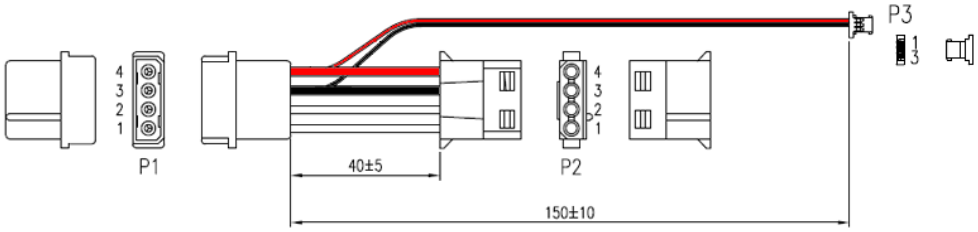

2.4 Environmental Specifications

Type		Value
Temperature	Standard Temperature Operating: Standard Temperature Storage: Wide Temperature Operating: Wide Temperature Storage:	0˚C~70˚C -40˚C~85˚C -40˚C~85˚C -50˚C~95˚C
Humidity	Operating & Storage	10~95%, Non-Condensing
Vibration	Non-Operating	20G, 10Hz~2000Hz
Shock	Non-Operating	1500G, 0.5ms

2.5 Mechanical Specifications

Type	Value
Form Factor	SATA Disk
Length	29.60mm +/-0.35mm
Width	30.06mm +/-0.20mm
Thickness	10.5mm +/-0.35mm

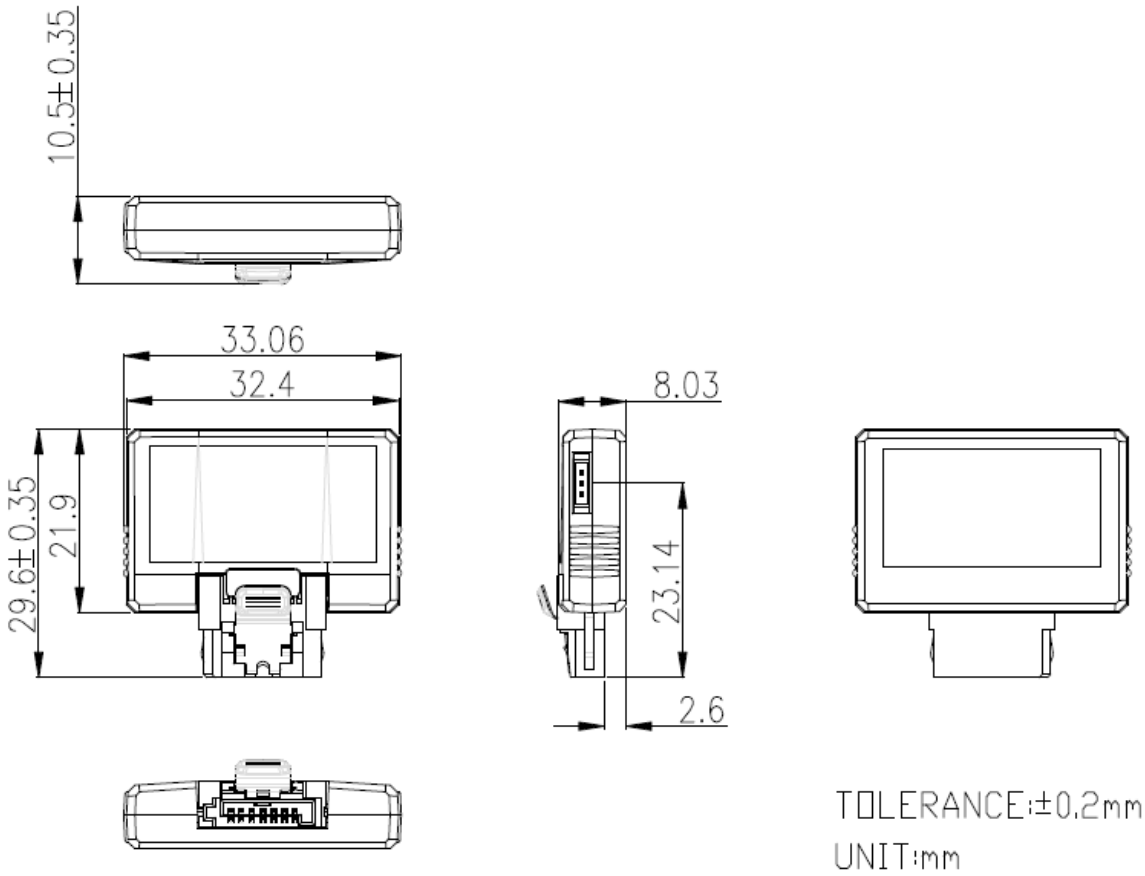

3. Part No. Decoder

3.1 Part No. Decoder

1	-	2	3	4	5	6	7	8	9
Product Line	-	Form Factor	Product Series	Cervoz Family Code (Bus / Internal Control)	Flash Brand	Flash Capacity	Flash Mode	Module Capacity	Operating Temp.
XXX	-	XX	X	XXX	X	X	X	XXXX	X

1. Product Line

CIS	Cervoz Industrial SSD
CIM	Cervoz Industrial Memory Card
CIE	Cervoz Industrial Embedded Module

2. Form Factor

2S	2.5” SATA
2P	2.5” PATA
CF	CompactFlash
CA	CFast
MS	mSATA
HM	Half Size mSATA
HS	Half Slim
M4	M.2 2242
M6	M.2 2260
M8	M.2 2280
0V	PATA Disk 40pin Vertical
4V	PATA Disk 44pin Vertical
4L	PATA Disk 44pin Horizontal Left
7T	SATA Disk 7pin Vertical Tall
7S	SATA Disk 7pin Vertical Short
7L	SATA Disk 7pin Horizontal Left
7R	SATA Disk 7pin Horizontal Right

3. Product Series

S	Supreme Series (SLC)
R	Reliance Series (RO-MLC)
M	Momentum Series (MLC)

4. Cervoz Family Code

Bus and Internal Control for Cervoz Product Families

5. Flash Brand

M	Micron
T	Toshiba

6. Flash Capacity

A	256Mb

B	512Mb
C	1Gb
D	2Gb
E	4Gb
F	8Gb
G	16Gb
H	32Gb
I	64Gb
J	128Gb
K	256Gb
L	512Gb
M	1Tb

7. Flash Mode

Internal Control for Flash Mode

8. Module Capacity

128M	128MB
256M	256MB
512M	512MB
001G	1GB
002G	2GB
004G	4GB
008G	8GB
016G	16GB
032G	32GB
064G	64GB
128G	128GB
256G	256GB
512G	512GB

9. Operating Temperature

S	Standard Grade (0~ +70°C)
W	Wide Temperature Grade (-40 ~ +85°C)