CAN Series Products

4-port Intelligent CAN bus Switch

I-2534

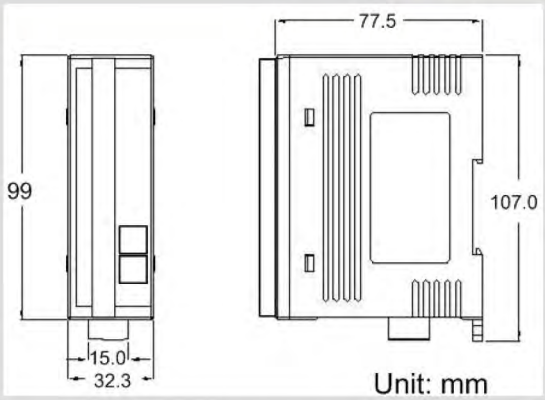

Dimensions

The I-2534 is one kind of CAN bus switch. There are four independent CAN channels which offer a flexible design of the start or tree network topology. This new topology could resolve the complex CAN bus application, like industrial machinery, building automation, vehicle automation, and etc. Furthermore the I-2534 integrates and exchanges data between different CAN network which has different baud rate. It helps users to extend the CAN network system. The I-2534 could increase the maximum CAN node count in a CAN network by splitting the CAN network into several subnets. In additional, the user-defined CAN baud rate and CAN filter configuration are also supported.

Features

- 4 CAN communication ports
- Compatible with CAN specification 2.0A and 2.0B
- Fully compatible with the ISO 11898-2 standard
- Baud rate : 5 k, 10 k, 20 k, 33.3 k, 50 k, 62.5 k, 83.3 k, 125 k, 250 k, 500 k, 800 k, 1 M bps and user-defined
- CAN bus filter is configurable
- 100 data frames buffer for each CAN channel
- Max data flow up to 2500 fps for all CAN channel
- Selectable baud rate by rotary switch
- Selectable 120Ω terminator resistor by DIP switch
- LED for CAN status.

Utility Features

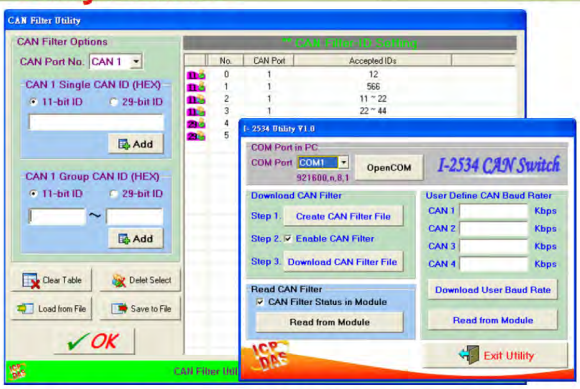

This utility configures the CAN filter and user-defined CAN baud rate. It can save the CAN filter configuration as file and would be import to another I-2534.

Block Diagram

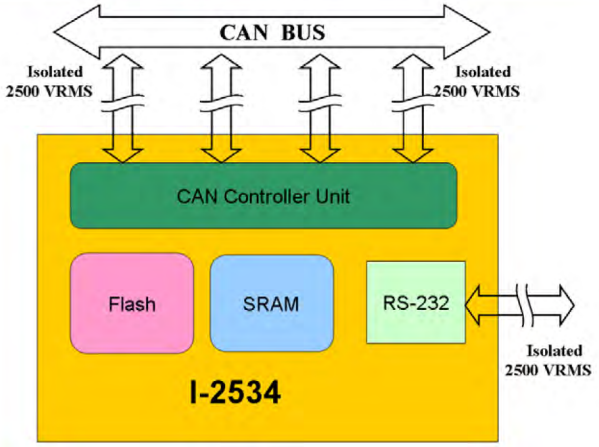

Pin Assignments

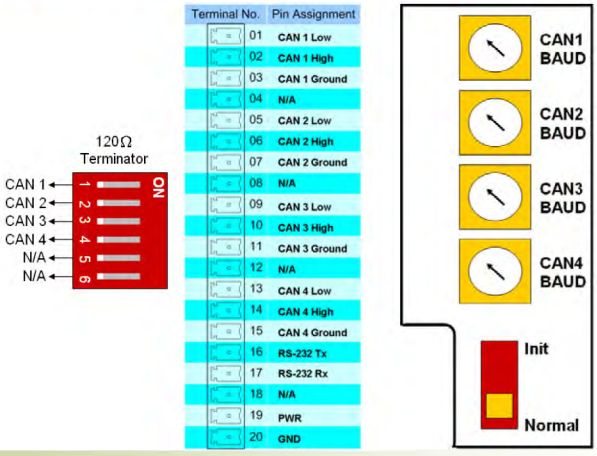

ICP Deutschland GmbH | +49(0)7121-14323-20 | sales@icp-deutschland.de | www.icp-deutschland.de

Hardware Specifications

Hardware	
Controller	High Performance Microcontroller
RTC (Real Time Clock)	No
Watchdog	Watchdog IC
ESD Protection	4 kV Contact for each channel
CAN Interface	
Transceiver	NXP TJA1042
Channel number	4
CAN Specification	ISO-11898-2, CAN 2.0A and CAN 2.0B
CAN Connector	3-pin screwed terminal block with CAN_H, CAN_L, CAN_GND
Baud Rate (bps)	5k, 10 k, 20 k, 33.3 k, 50 k, 62.5 k, 83.3 k, 125 k, 250 k, 500 k, 800 k, 1 M bps and user-defined
Baud Rate Selection	Selectable by rotary switch
Isolation	3000 V_{DC} for DC-to-DC, 2500 Vrms for photo-couple
Terminator Resistor	Selectable 120Ω terminator resistor by DIP switch
Transmission Distance (m)	Depend on baud rate (for example, max. 1000 m at 50 kbps)
CAN Filter	Configurable by user
UART Interface	
RS-232	1 port (for configuration)
RS-232 Connector	3-pin screwed terminal block (TxD, RxD, GND)
LED	
Round LED	CAN status LED x 4 , Power LED x 1
Power	
Input range	Unregulated +10 ~ +30 V_{DC}
Power Consumption	3W
Mechanism	
Installation	DIN-Rail
Casing	Flame-Resistant plastic case
Dimensions	32.3 mm x 99 mm x 77.5 mm (W x L x H)
Environment	
Operating Temp.	-25 ~ 75 ℃
Storage Temp.	-30 ~ 80 ℃
Humidity	10 ~ 90% RH, non-condensing

Application

CAN bus with Star Topology

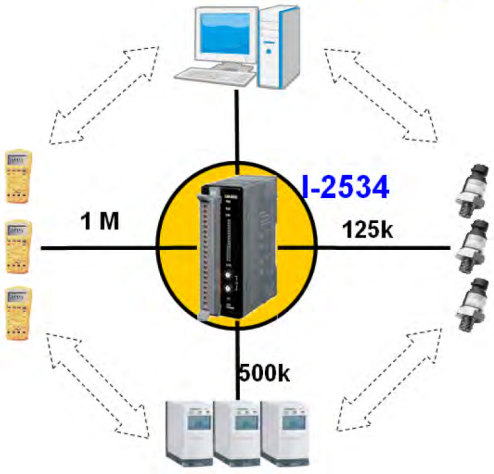

CAN bus with Tree Topology

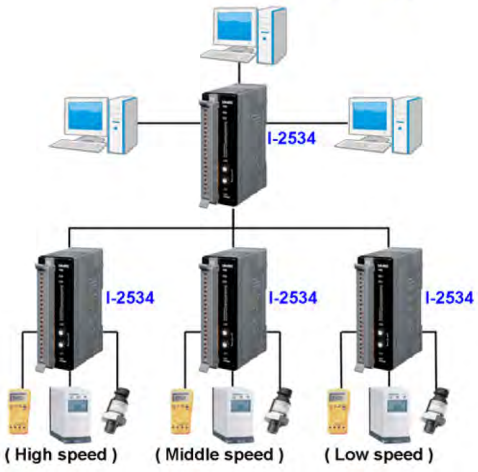

Ordering Information

I-2534	4-port Intelligent CAN bus Switch