Quick Installation Guide

ISC Series

Industrial Serial Media Converter

Introduction

ISC Series are industrial media converters provide media conversion for RS-232 and RS-422/485 interfaces. **ISC Series** are ABS housing design and supporting an operating temperature of -10°C to 70°C. **ISC Series (-I Model)** Opto-isolations provide 3000 VDC of isolation to protect the host computer loops and destructive voltage spikes. Internal high-speed transient suppressors on each data line protect the modules from dangerous voltages levels or spikes. Therefore, the **ISC Series** is reliable media converter and can satisfy most demand of operating environment.

The **ISC-1212-I** RS-422/485 repeater boosts the RS-422/485 signals to extend the reach distance up to 4000 ft (1200m) and increase the maximum number of connected nodes up to 128. With a special circuitry, **ISC-1212-I** is able to automatically detect the data flow and switch the direction of the data lines accordingly. "Auto baud rate detector" enables **ISC-1212-I** to automatically configure RS-422/485 signals to any baud rate without external switch setting.

The **ISC-1210U-I/ISC-1310U-I** converter is an intelligent, stackable expansion module that connects to PC USB port or USB Hub via the Universal Serial Bus(USB) port, providing one High-Speed RS-232/RS-422 or RS-485 serial port(jumperless). The **ISC-1210U-I/ISC-1310U-I** feature easy connectivity for serial devices. The RS-232 standard supports full-duplex communication and handshaking signals (such as RTS, CTS) and The RS-485 control is completely transparent to the user and software written for half-duplex COM works without any modification. The **ISC-1210U-I/ISC-1310U-I** module derives the power from USB port and doesn't need any aid of external power adapter.

Features

- **Auto switching baud rate from 300 ~ 115200 bps**
- **Wide operating temperature range from -10°C to 70°C**
- **Provide 3000 VDC isolation protection by -I model**
- **Automatic internal RS-422/485 bus supervision**
- **Reach distance up to 4000 feet (1200 m) for RS-422/485 interface**
- **RS-232/RS-422 support RTS/CTS handshake signals (-U Model only)**
- **Auto detect and switching for USB to RS-232/422/485 (ISC-1310U-I)**
- **Power requirement: +9 to +30 VDC**
- **ABS with captive mounting hardware design**
- **Mounts easily on DIN-rail or panel**

ORing Industrial Networking Corp.

Copyright© 2009 ORing
All rights reserved.

TEL: +886-2-2918-3036
FAX: +886-2-2918-3084
Website: www.oring-networking.com
E-mail: support@oring-networking.com

Specifications

ORing Media Converter Model	ISC-1112	ISC-1112-I	ISC-1212-I	ISC-1210U-I	ISC-1310U-I
Physical Ports					
USB V1.1 port (B-Type)	-	-	-	1	1
DB9 Connector (Female)	1	1	-	-	-
10-pin Terminal Block	1	1	2	1	1
Baud Rate	300 ~ 115.2 Kbps				
Data bit	5, 6, 7, 8				
Stop bit	1, 1.5, 2				
Parity	None, Even, Odd, Space, Mark				
Flow Control	XON / XOFF (software) Auto Hardware Director Contro for RS-485 Interface			XON / XOFF (software) RTS / CTS (Hardware) Auto Hardware Director Contro for RS-485 Interface	
Signal	RS-232: TxD, RxD, GND	RS-232: -		RS-232: -	RS-232: TX, RX, RTS, CTS, GND
	RS-422: TxD+, TxD-, RxD+, RxD-			RS-422: TX+, TX-, RX+, RX-, RTS+, RTS-, CTS+, CTS-, GND	RS-422: TX+, TX-, RX+, RX-, GND
	RS-485: Data+, Data-, GND				
LED indicator					
Power Indicator	Green: Power LED x1				
TxD Indicator	Green LED x1				
RxD Indicator	Red LED x1				
Power					
Input power	+9~30 VDC power inputs in 10-pin terminal block			USB bus power (self power)	
Power consumption(Typ.)	2.2 Watts		0.7 Watts	0.65 Watts	
Protection					
Isolation	-	3000 VDC			
Drive Support					
O.S.	Windows 95/98/ME/2000/XP, Linux				
Physical Characteristic					
Enclosure	ABS				
Dimension (W x D x H)	71.2 (W)mm x 25.3 (D)mm x 100.6 (H)mm (2.8x1x3.96 inch)				
Weight (g)	110 g	112 g	128 g	114 g	110 g
Environmental					
Storage Temperature	-25 to 85°C (-13 to 185°F)				
Operating Temperature	-10 to 70°C (14 to 158°F)				
Operating Humidity	5% to 95% Non-condensing				
Regulatory approvals					
EMI	FCC Part 15, CISPR (EN55022) class A				
EMS	EN61000-4-2 (ESD), EN61000-4-3 (RS), EN61000-4-4 (EFT), EN61000-4-5 (Surge), EN61000-4-6 (CS), EN61000-4-8, EN61000-4-11				
Shock	IEC60068-2-27				
Free Fall	IEC60068-2-32				
Vibration	IEC60068-2-6				
Warranty	2 years				

Installation

DIN-Rail Install Step

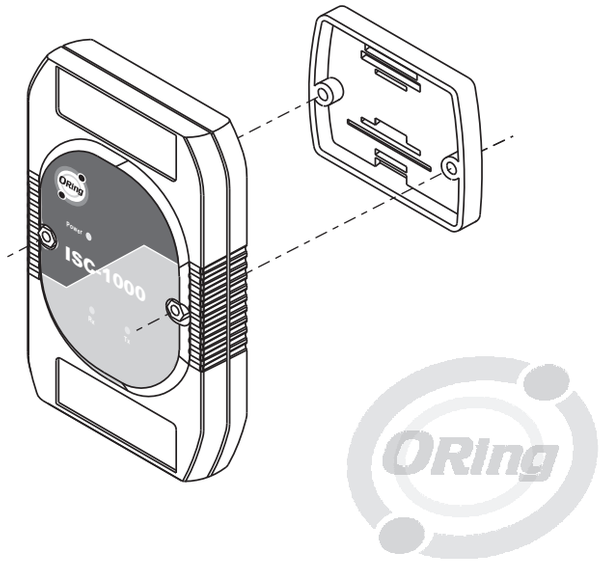

Wall-mounted Install Step

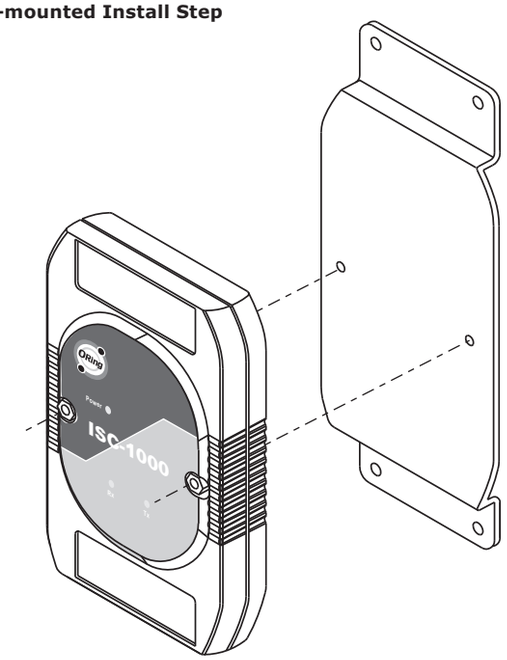

Quick Installation Guide

ISC Series

Industrial Serial Media Converter

Front Panel

ISC-1112-I / ISC-1112

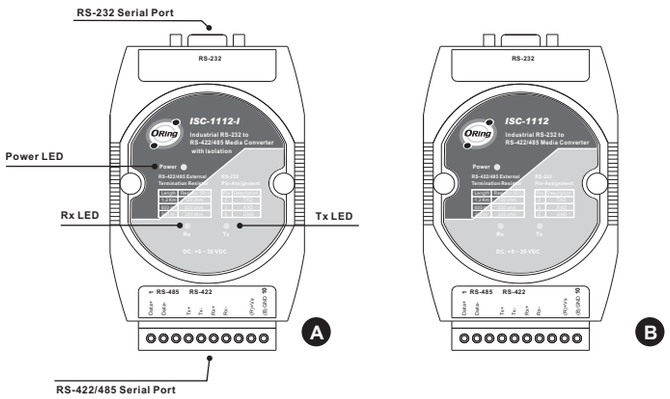

ISC-1210U-I

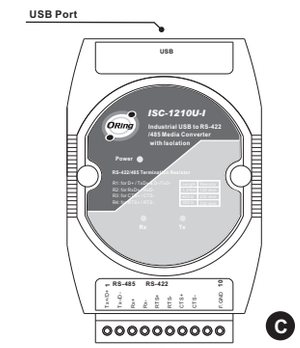

ISC-1310U-I

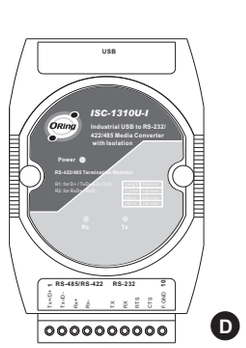

ISC-1212-I

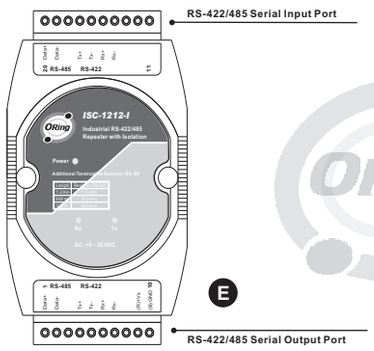

Pin Assignment

ISC-1112-I / ISC-1112 Pin Assignment

■ Serial Port DB9 Female

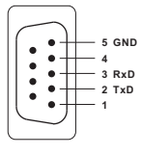

■ 10-pin Terminal Block Pin Assignment

RS-422/485 Terminal Block Pin Assignment										
Interface	RS-485		Reserved	RS-422				Reserved	Power Input	
Pin No.	1	2	3	4	5	6	7	8	9	10
Info	Data+	Data-	N.C.	TX+	TX-	RX+	RX-	N.C.	V+	GND

ISC-1210U-I Pin Assignment

RS-422/485 Terminal Block Pin Assignment										
Interface	RS-422/485		RS-422						Reserved	
Pin No.	1	2	3	4	5	6	7	8	9	10
Info	TX+/D+	TX-/D-	RX+	RX-	RTS+	RTS-	CTS+	CTS-	N.C.	GND

ISC-1310U-I Pin Assignment

RS-232/422/485 Terminal Block Pin Assignment										
Interface	RS-422/485		RS-422		Reserved	RS-232				
Pin No.	1	2	3	4	5	6	7	8	9	10
Info	TX+/D+	TX-/D-	RX+	RX-	N.C.	TX	RX	RTS	CTS	GND

ISC-1212-I Pin Assignment

Output RS-422/485 Terminal Block Pin Assignment										
Interface	RS-485		Reserved	RS-422				Reserved		
Pin No.	1	2	3	4	5	6	7	8	9	10
Info	Data+	Data-	N.C.	TX+	TX-	RX+	RX-	N.C.	V+	GND
Input RS-422/485 Terminal Block Pin Assignment										
Interface	RS-485		Reserved	RS-422				Reserved		
Pin No.	20	19	18	17	16	15	14	13	12	11
Info	Data+	Data-	N.C.	TX+	TX-	RX+	RX-	N.C.		

Accessory

① Wall-mounted kit

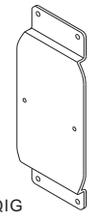

② DIN-Rail kit (ABS)

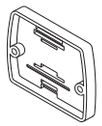

③ 10-Pin Terminal block

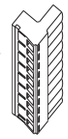

④ QIG

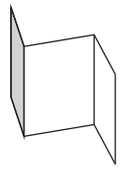

⑤ CD

⑥ USB Cable

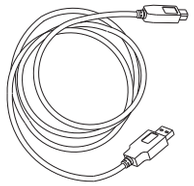

Packing list

Model name	Front Panel	Model Description	Accessory
ISC-1112-I	A	Industrial 1-port RS-232 to 1-port RS-422/485 serial media converter with 3KV isolation	①X 1, ②X 1, ③X 1, ④X 1
ISC-1112	B	Industrial 1-port RS-232 to 1-port RS-422/485 serial media converter	①X 1, ②X 1, ③X 1, ④X 1
ISC-1210U-I	C	Industrial 1-port USB to 1-port RS-422/485 serial media converter with 3KV isolation	①X 1, ②X 1, ③X 1, ④X 1, ⑤X 1, ⑥X 1
ISC-1310U-I	D	Industrial 1-port USB to 1-port RS-232/422/485 serial media converter with 3KV isolation	①X 1, ②X 1, ③X 1, ④X 1 ⑤X 1, ⑥X 1
ISC-1212-I	E	Industrial RS-422/485 repeater with 3KV isolation	①X 1, ②X 1, ③X 2, ④X 1

Connections of Media Converter

ISC-1112-I / ISC-1112 Port Connection

ISC-1212-I Port Connection

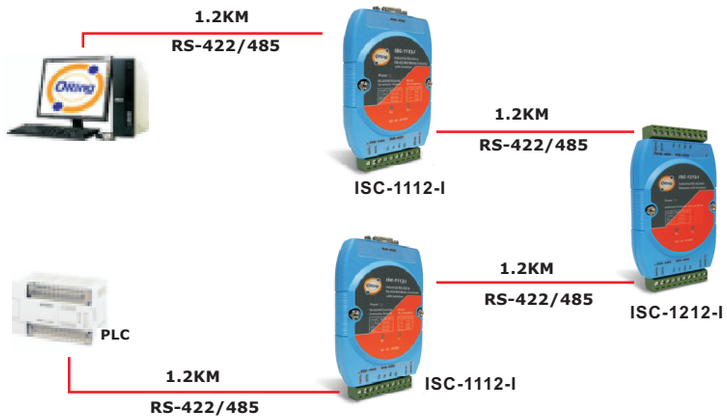

ISC-1210U-I / ISC-1310U-I Port Connection