IEI Technology Corp.

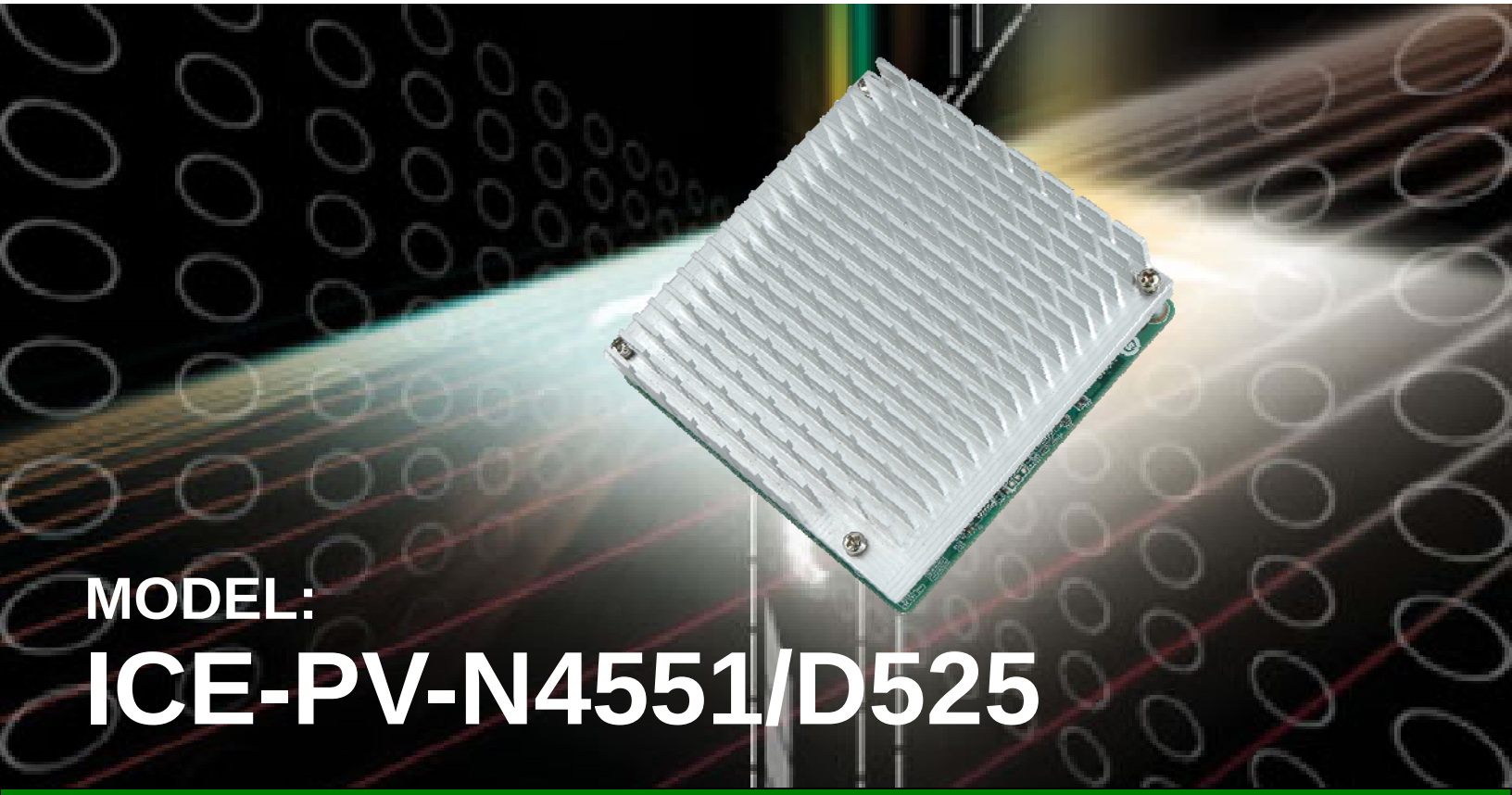

MODEL:

# ICE-PV-N4551/D525

**COM Express Module (Type 2)**
**Intel® ATOM™ CPU**
**RoHS Compliant**

# User Manual

**Rev. 1.02 – 3 April, 2012**

# Revision

| Date | Version | Changes |
|---|---|---|
| 3 April, 2012 | 1.02 | Minor correction to Table 3-1: ICE-PV-N4551/D5251 Interface Connectors and Section 3.2 Peripheral Interface Connectors |
| 14 February, 2012 | 1.01 | Minor correction to Table 3-3: COM Express Connector AB Pin Definitions and Section 1.5 Technical Specifications |
| 27 September, 2011 | 1.00 | Initial release |

# Copyright

## COPYRIGHT NOTICE



## TRADEMARKS

# Packing List

**NOTE:**

If any of the components listed in the checklist below are missing, please do not proceed with the installation. Contact the IEI reseller or vendor you purchased the ICE-PV-N4551/D5251 from or contact an IEI sales representative directly. To contact an IEI sales representative, please send an email to sales@iei.com.tw

The items listed below should all be included in the ICE-PV-N4551/D5251 package.

- 1 x ICE-PV-N4551/D5251
- 1 x Heatspreader
- 1 x Utility CD
- 1 x QIG (quick installation guide)

Images of the above items are shown in **Chapter 3**.

# Table of Contents

# List of Figures

# List of Tables

# BIOS Menus

Chapter

1

# Introduction

## 1.1 Overview

**Figure 1–1: ICE-PV-N4551/D5251**

The ICE-PV-N4551/D5251 COM Express module provides the main processing chips and is connected to a compatible COM Express carrier board. The ICE-PV-N4551/D5251 is equipped with an Intel® Atom™ N455/D525 CPU, Intel® Atom™ N455/D525 Northbridge and Intel® ICH8M Southbridge and provides multiple modern serial I/O options, while offering limited support for legacy I/Os. The COM Express standard allows the COM Express carrier board to be designed, while leaving the choice of processor till the later stages of design. The ICE-PV-N4551/D5251 provides a low power option with the full range of modern I/O options. The ICE-PV-N4551/D5251 embedded module is designed for flexible integration by system developers into customized platform devices.

### 1.1.1 Applications

The ICE-PV-N4551/D5251 is designed to a COM Express carrier board for being embedded in customized baseboards for flexible applications.

### 1.1.2 Benefits

Some of the ICE-PV-N4551/D5251 embedded platform benefits include:

- Low power, high performance
- Easy integration into customized baseboards
- Easy upgrading
- Easy maintenance
- Easy design compatibility
- Low cost product development

### 1.1.3 Features

Some of the ICE-PV-N4551/D5251 features are listed below:

- Complies with COM Express form factor
- Complies with RoHS
- Embedded Intel® Atom™ N455/D525 CPU
- Supports up to 2 GB of 800 MHz DDR3 SDRAM SO-DIMM
- Comes with a high performance gigabit Ethernet (GbE) controller
- Support for eight USB 2.0 devices
- Support for one IDE device

## 1.2 Dimensions

The dimensions of the board are listed below:

- **Length**: 95 mm
- **Width**: 95 mm

### 1.2.1 Top View

The figure below shows the dimensions from the top view.

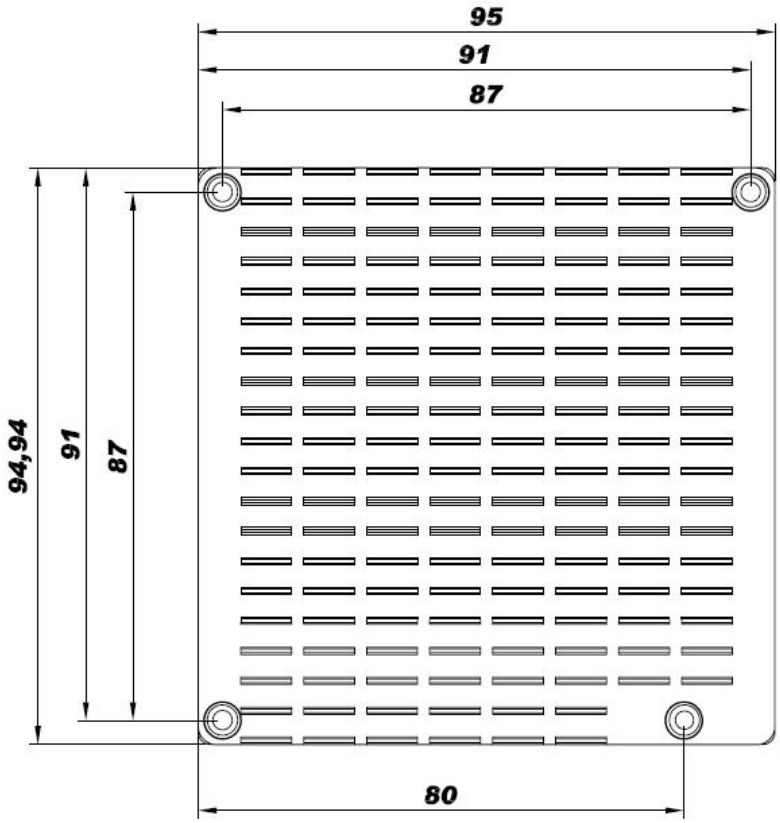


**Figure 1-2: Front View (mm)**

### 1.2.2 Side View

The figure below shows the dimensions as viewed from the side.

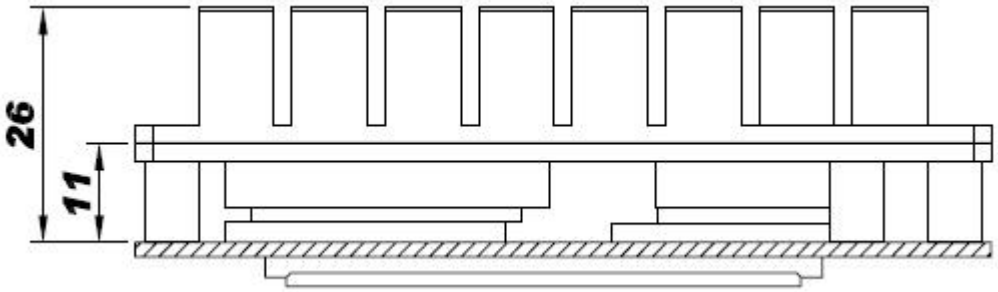


**Figure 1-3: Side Dimensions (mm)**

## 1.3 Data Flow

**Figure 1-4** shows the data flow between the two on-board chipsets and other components installed on the motherboard and described in the following sections of this chapter.

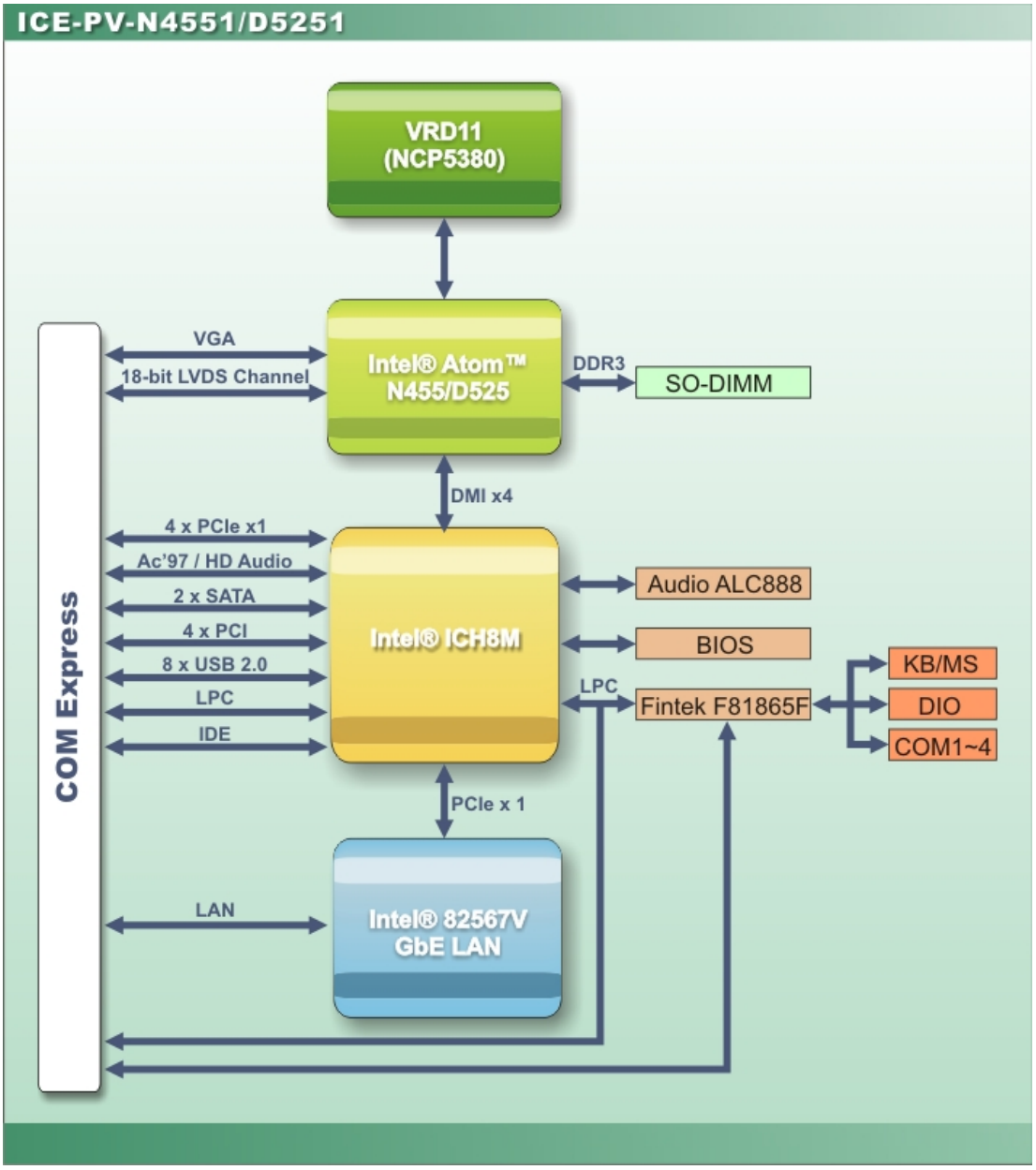


**Figure 1-4: Data Flow Block Diagram**

## 1.4 Connectors

The ICE-PV-N4551/D5251 embedded module has the following connectors as seen in **Figure 1-5** and **Figure 1-6**.

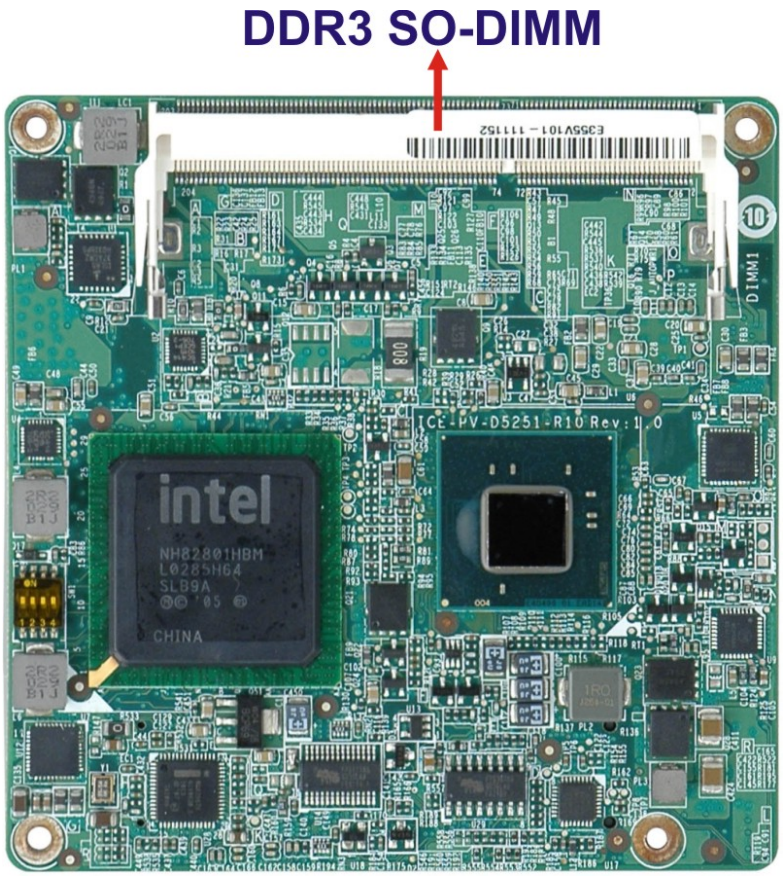


**Figure 1-5: ICE-PV-N4551/D5251 Overview (Front Side)**

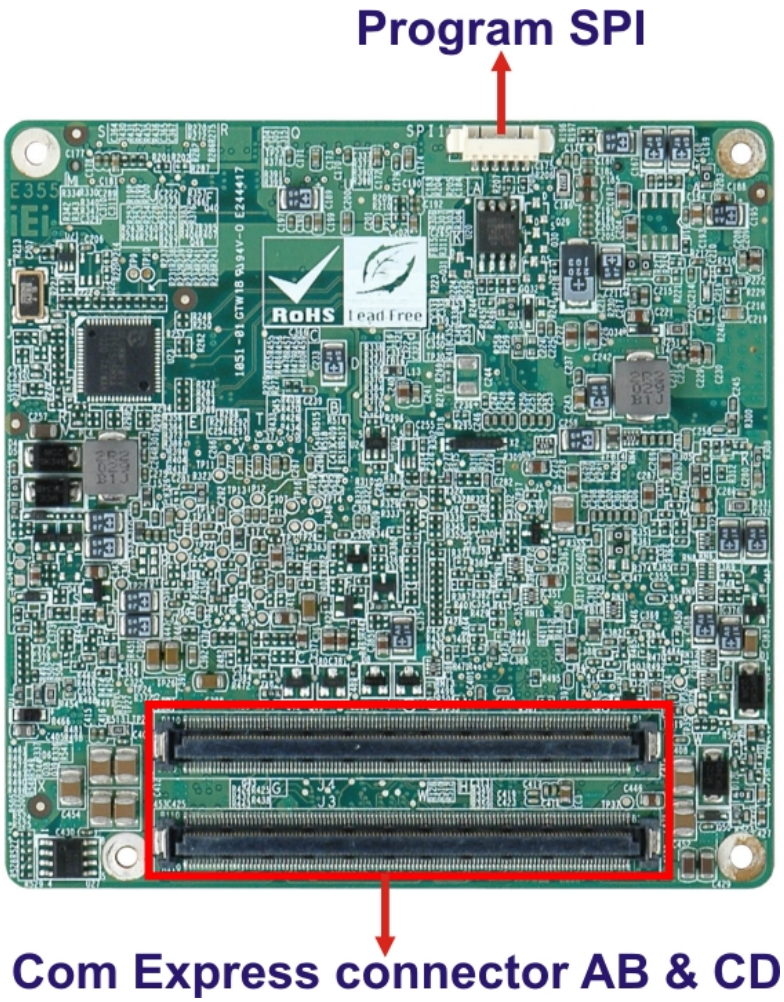


**Figure 1-6: ICE-PV-N4551/D5251 Overview (Reverse Side)**

### 1.4.1 IO Interface Support

The ICE-PV-N4551/D5251 embedded module supports the following IO interfaces on the baseboard:

- 1 x IDE channel (signal to base board)
- 3 x SATA 3Gb/s (to base board)
- 8 x USB 2.0 (to base board)
- 5 x PCIe x1
- 4 x PCI
- 1 x GbE

- HD Audio (through HD audio chip on the baseboard, connected to HD audio interface on the ICE-PV-N4551/D5251)
- Legacy ports (COM, LPT, BIOS, and PS/2) through super I/O on the baseboard connected to the LPC interface on the ICE-PV-N4551/D5251.

## 1.5 Technical Specifications

ICE-PV-N4551/D5251 technical specifications are listed in **Table 1-1**. Detailed descriptions of each specification can be found in the detailed specifications chapter.

| Specification | Value |
|---|---|
| **CPUs Supported** | Intel® Atom™ N455/D525 |
| **System Chipset** | Intel® ICH8M |
| **Ethernet** | Intel® 82567V GbE |
| **Memory** | One 204-pin 800MHz DDR3 SDRAM SO-DIMM up to 2.0 GB supported |
| **Graphic Chipset** | GMA 3150<br>Graphic core speed 400MHz for D525<br>Graphic core speed 200MHz for N455 |
| **Display** | Analog CRT (VGA) integrated in Intel® N455/D525 (signal to base board)<br>18-bit single-channel LVDS (signal to base board) |
| **I/O Interfaces** | 8 x USB 2 .0<br>3 x SATA 3Gb/s<br>1 x IDE<br>1 x GbE |
| **Expansion** | 5 x PCIe x1<br>4 x PCI (32-bit, 33 MHz) |
| **BIOS** | UEFI |
| **Power Support** | 12V only, AT/ATX power supported |
| **Power Consumption** | 12V @ 1.25A (Intel® Atom™ D525 1.8GHz with DDR3 1GB) |

| Specification | Value |
|---|---|
| **Watchdog Timer** | Software programmable supports 1~255 sec. system reset |
| **Physical Dimensions** | 95 mm x 95 mm |
| **Weight** | GW: 600 g<br>NW: 200 g |
| **Operating Temperature** | -20°C ~ 60°C with free air, -20°C ~ 70°C with force air for D525 processor<br>-20°C ~ 70°C with free air, -20°C ~ 75°C with force air for N455 processor |
| **Humidity** | Operation: 5% ~ 95%, non-condensing |

**Table 1-1: Technical Specifications**

Chapter

2

# Unpacking

## 2.1 Anti-static Precautions

**WARNING:**

Failure to take ESD precautions during the installation of the ICE-PV-N4551/D5251 may result in permanent damage to the ICE-PV-N4551/D5251 and severe injury to the user.

Electrostatic discharge (ESD) can cause serious damage to electronic components, including the ICE-PV-N4551/D5251. Dry climates are especially susceptible to ESD. It is therefore critical that whenever the ICE-PV-N4551/D5251 or any other electrical component is handled, the following anti-static precautions are strictly adhered to.

- ***Wear an anti-static wristband***: Wearing a simple anti-static wristband can help to prevent ESD from damaging the board.
- ***Self-grounding***: Before handling the board, touch any grounded conducting material. During the time the board is handled, frequently touch any conducting materials that are connected to the ground.
- ***Use an anti-static pad***: When configuring the ICE-PV-N4551/D5251, place it on an antic-static pad. This reduces the possibility of ESD damaging the ICE-PV-N4551/D5251.
- ***Only handle the edges of the PCB***: When handling the PCB, hold the PCB by the edges.

## 2.2 Unpacking

### 2.2.1 Unpacking Precautions

When the ICE-PV-N4551/D5251 is unpacked, please do the following:

- Follow the anti-static precautions outlined in **Section 2.1**.
- Make sure the packing box is facing upwards so the ICE-PV-N4551/D5251 does not fall out of the box.
- Make sure all the components shown in **Section 2.3** are present.

## 2.3 Unpacking Checklist

**NOTE:**

If some of the components listed in the checklist below are missing, please do not proceed with the installation. Contact the IEI reseller or vendor you purchased the ICE-PV-N4551/D5251 from or contact an IEI sales representative directly. To contact an IEI sales representative, please send an email to sales@iei.com.tw.

### 2.3.1 Package Contents

The ICE-PV-N4551/D5251 is shipped with the following components:

| Quantity | Item | Image |
|---|---|---|
| 1 | ICE-PV-N4551/D5251 |  |
| 1 | Heatspreader |  |
| 1 | Quick Installation Guide |  |

| Quantity | Item | Image |
|---|---|---|
| 1 | Utility CD |  |

**Table 2-1: Package List Contents**

Chapter

3

# Connectors

## 3.1 Peripheral Interface Connectors

**Section 3.1.1** shows interface connector locations. **Section 3.1.2** lists all the interface connectors seen in **Section 3.1.1**.

### 3.1.1 ICE-PV-N4551/D5251 Layout

**Figure 3-1** shows the on-board peripheral connectors, backplane peripheral connectors and on-board jumpers.

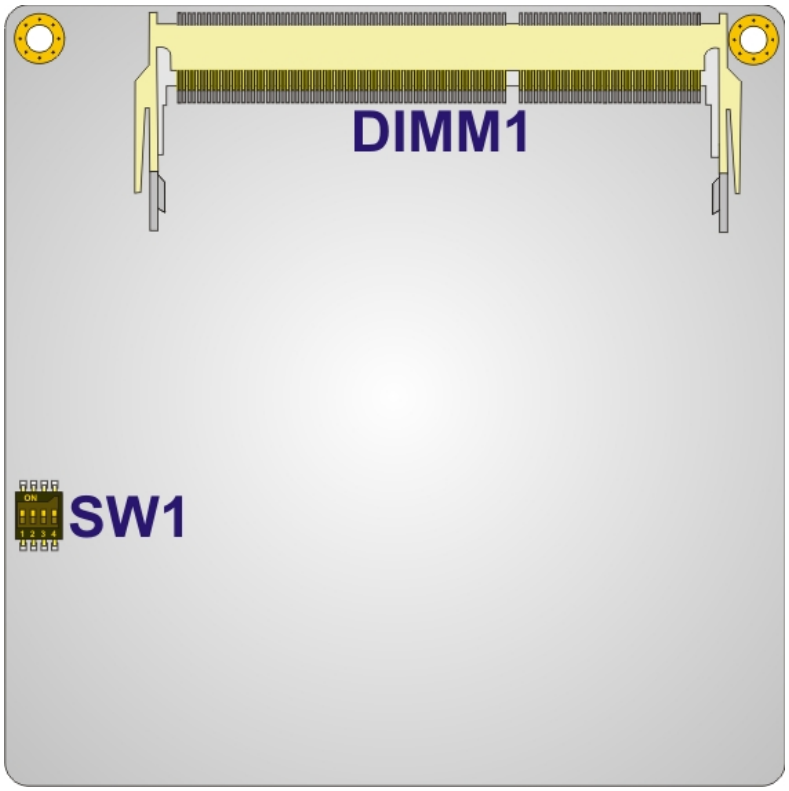


**Figure 3-1: Connector and Jumper Locations (Front Side)**

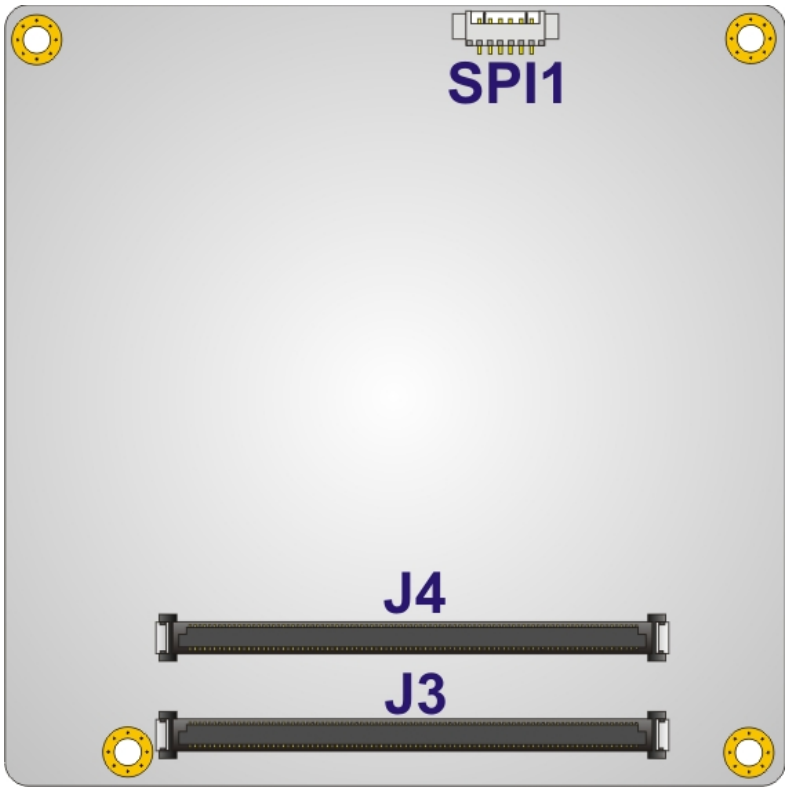


**Figure 3-2: Connector and Jumper Locations (Back Side)**

### 3.1.2 Peripheral Interface Connectors

**Table 3-1** shows a list of the interface connectors on the ICE-PV-N4551/D5251 Detailed descriptions of these connectors can be found in **Section 3.2**.

| Connector | Type | Label |
|---|---|---|
| COM Express connector CD | COM Express connector | J4 |
| COM Express connector AB | COM Express connector | J3 |
| SO-DIMM socket | SO-DIMM socket | DIMM1 |
| SPI programming connector | 6-pin connector | SPI1 |

**Table 3-1: ICE-PV-N4551/D5251 Interface Connectors**

## 3.2 Peripheral Interface Connectors

The location of the pins and the pinout descriptions of the peripheral interface connectors are given below.

### 3.2.1 COM Express Connector CD

| | |
|---|---|
| **CN Label:** | **J4** |
| **CN Type:** | 220-pin COM Express connector |
| **CN Location:** | See **Figure 3-3** |
| **CN Pinouts:** | See **Table 3-2** |

The standard COM Express connector locations and pinouts are shown below.

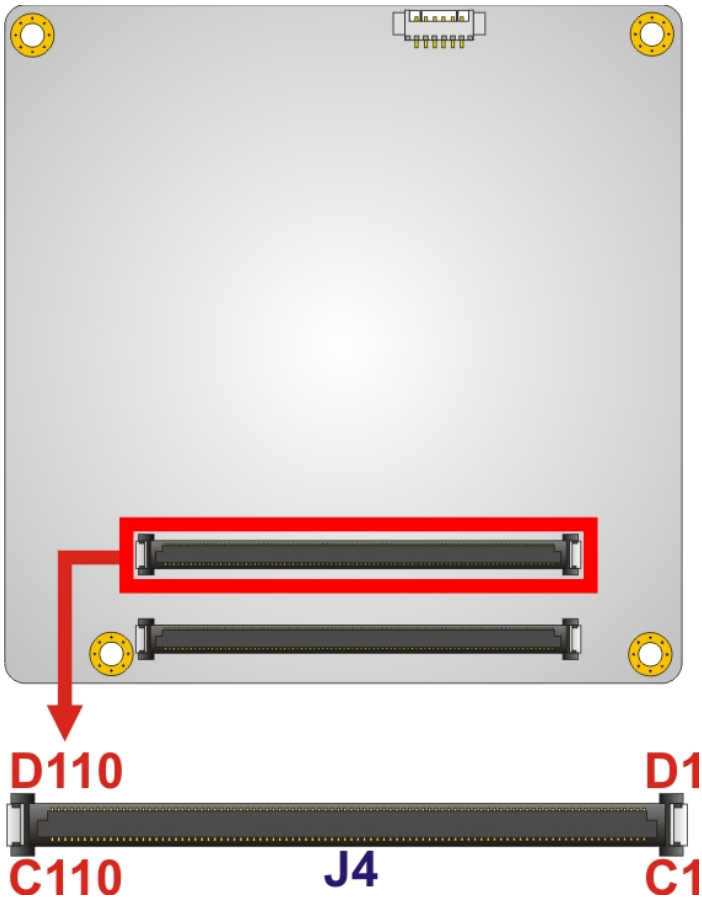


**Figure 3-3: COM Express Connector CD Location**

| Pin No. | Description | Pin No. | Description |
|---|---|---|---|
| C1 | GND | D1 | GND |
| C2 | IDE_D7 | D2 | IDE_D5 |
| C3 | IDE_D6 | D3 | IDE_D10 |
| C4 | IDE_D3 | D4 | IDE_D11 |
| C5 | IDE_D15 | D5 | IDE_D12 |
| C6 | IDE_D8 | D6 | IDE_D4 |
| C7 | IDE_D9 | D7 | IDE_D0 |
| C8 | IDE_D2 | D8 | IDE_REQ |
| C9 | IDE_D13 | D9 | IDE_IOW# |
| C10 | IDE_D1 | D10 | IDE_ACK# |
| C11 | GND | D11 | GND |
| C12 | IDE_D14 | D12 | IDE_IRQ |
| C13 | IDE_IORDY | D13 | IDE_A0 |
| C14 | IDE_IOR# | D14 | IDE_A1 |
| C15 | PCI_PME# | D15 | IDE_A2 |
| C16 | PCI_GNT2# | D16 | IDE_CS1# |
| C17 | PCI_REQ2# | D17 | IDE_CS3# |
| C18 | PCI_GNT1# | D18 | IDE_RESET# |
| C19 | PCI_REQ1# | D19 | PCI_GNT3# |
| C20 | PCI_GNT0# | D20 | PCI_REQ3# |
| C21 | GND | D21 | GND |
| C22 | PCI_REQ0# | D22 | PCI_AD1 |
| C23 | PCI_RESET# | D23 | PCI_AD3 |
| C24 | PCI_AD0 | D24 | PCI_AD5 |
| C25 | PCI_AD2 | D25 | PCI_AD7 |
| C26 | PCI_AD4 | D26 | PCI_C/BE0# |
| C27 | PCI_AD6 | D27 | PCI_AD9 |
| C28 | PCI_AD8 | D28 | PCI_AD11 |
| C29 | PCI_AD10 | D29 | PCI_AD13 |
| C30 | PCI_AD12 | D30 | PCI_AD15 |
| C31 | GND | D31 | GND |
| C32 | PCI_AD14 | D32 | PCI_PAR |

| Pin No. | Description | Pin No. | Description |
|---|---|---|---|
| C33 | PCI_C/BE1# | D33 | PCI_SERR# |
| C34 | PCI_PERR# | D34 | PCI_STOP# |
| C35 | PCI_LOCK# | D35 | PCI_TRDY# |
| C36 | PCI_DEVSEL# | D36 | PCI_FRAME# |
| C37 | PCI_IRDY# | D37 | PCI_AD16 |
| C38 | PCI_C/BE2# | D38 | PCI_AD18 |
| C39 | PCI_AD17 | D39 | PCI_AD20 |
| C40 | PCI_AD19 | D40 | PCI_AD22 |
| C41 | GND | D41 | GND |
| C42 | PCI_AD21 | D42 | PCI_AD24 |
| C43 | PCI_AD23 | D43 | PCI_AD26 |
| C44 | PCI_C/BE3# | D44 | PCI_AD28 |
| C45 | PCI_AD25 | D45 | PCI_AD30 |
| C46 | PCI_AD27 | D46 | PCI_IRQC# |
| C47 | PCI_AD29 | D47 | PCI_IRQD# |
| C48 | PCI_AD31 | D48 | PCI_CLKRUN# |
| C49 | PCI_IRQA# | D49 | PCI_M66EN |
| C50 | PCI_IRQB# | D50 | PCI_CLK |
| C51 | GND | D51 | GND |
| C52 | PEG_RX0+ | D52 | PEG_TX0+ |
| C53 | PEG_RX0- | D53 | PEG_TX0- |
| C54 | TYPE0# | D54 | PEG_LANE_RV# |
| C55 | PEG_RX1+ | D55 | PEG_TX1+ |
| C56 | PEG_RX1- | D56 | PEG_TX1- |
| C57 | TYPE1# | D57 | TYPE2# |
| C58 | PEG_RX2+ | D58 | PEG_TX2+ |
| C59 | PEG_RX2- | D59 | PEG_TX2- |
| C60 | GND | D60 | GND |
| C61 | PEG_RX3+ | D61 | PEG_TX3+ |
| C62 | PEG_RX3- | D62 | PEG_TX3- |
| C63 | RSVD | D63 | RSVD |
| C64 | RSVD | D64 | RSVD |

| Pin No. | Description | Pin No. | Description |
|---|---|---|---|
| C65 | PEG_RX4+ | D65 | PEG_TX4+ |
| C66 | PEG_RX4- | D66 | PEG_TX4- |
| C67 | FAN_PWMOUT | D67 | GND |
| C68 | PEG_RX5+ | D68 | PEG_TX5+ |
| C69 | PEG_RX5- | D69 | PEG_TX5- |
| C70 | GND | D70 | GND |
| C71 | PEG_RX6+ | D71 | PEG_TX6+ |
| C72 | PEG_RX6- | D72 | PEG_TX6- |
| C73 | SDVO_DATA | D73 | SVDO_CLK |
| C74 | PEG_RX7+ | D74 | PEG_TX7+ |
| C75 | PEG_RX7- | D75 | PEG_TX7- |
| C76 | GND | D76 | GND |
| C77 | FAN_TACHOIN | D77 | IDE_CBLID# |
| C78 | PEG_RX8+ | D78 | PEG_TX8+ |
| C79 | PEG_RX8- | D79 | PEG_TX8- |
| C80 | GND | D80 | GND |
| C81 | PEG_RX9+ | D81 | PEG_TX9+ |
| C82 | PEG_RX9- | D82 | PEG_TX9- |
| C83 | RSVD | D83 | RSVD |
| C84 | GND | D84 | GND |
| C85 | PEG_RX10+ | D85 | PEG_TX10+ |
| C86 | PEG_RX10- | D86 | PEG_TX10- |
| C87 | GND | D87 | GND |
| C88 | PEG_RX11+ | D88 | PEG_TX11+ |
| C89 | PEG_RX11- | D89 | PEG_TX11- |
| C90 | GND | D90 | GND |
| C91 | PEG_RX12+ | D91 | PEG_TX12+ |
| C92 | PEG_RX12- | D92 | PEG_TX12- |
| C93 | GND | D93 | GND |
| C94 | PEG_RX13+ | D94 | PEG_TX13+ |
| C95 | PEG_RX13- | D95 | PEG_TX13- |
| C96 | GND | D96 | GND |

| Pin No. | Description | Pin No. | Description |
|---|---|---|---|
| C97 | RSVD | D97 | PEG_ENABLE# |
| C98 | PEG_RX14+ | D98 | PEG_TX14+ |
| C99 | PEG_RX14- | D99 | PEG_TX14- |
| C100 | GND | D100 | GND |
| C101 | PEG_RX15+ | D101 | PEG_TX15+ |
| C102 | PEG_RX15- | D102 | PEG_TX15- |
| C103 | GND | D103 | GND |
| C104 | +V12 | D104 | +V12 |
| C105 | +V12 | D105 | +V12 |
| C106 | +V12 | D106 | +V12 |
| C107 | +V12 | D107 | +V12 |
| C108 | +V12 | D108 | +V12 |
| C109 | +V12 | D109 | +V12 |
| C110 | GND | D110 | GND |

**Table 3-2: COM Express Connector CD Pin Definitions**

### 3.2.2 COM Express Connector AB

**CN Label:** **J3**

**CN Type:** 220-pin COM Express connector

**CN Location:** See **Figure 3-4**

**CN Pinouts:** See **Table 3-3**

The standard COM Express connector locations and pinouts are shown below.

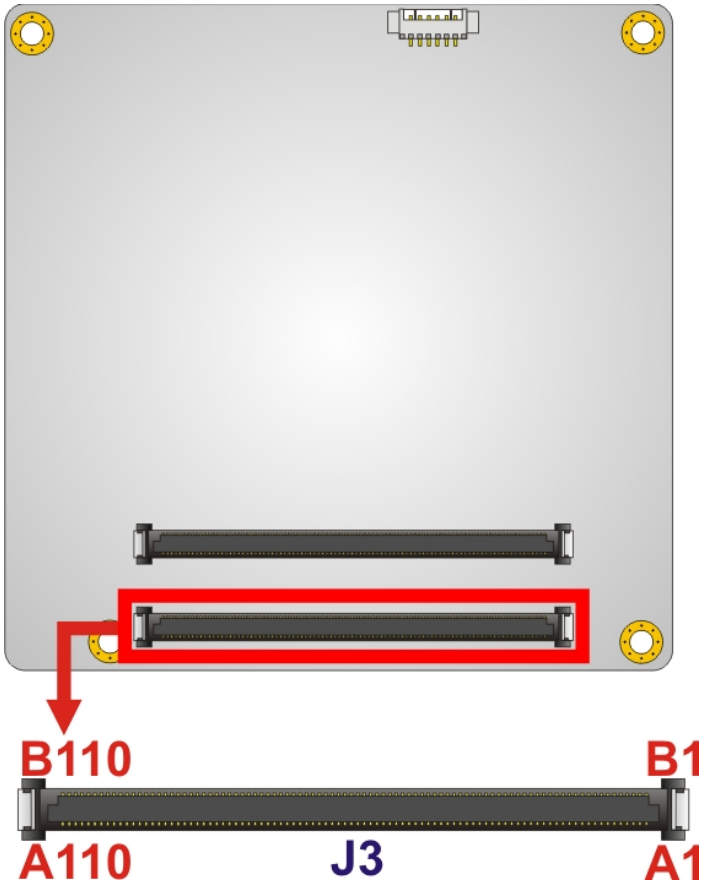


**Figure 3-4: COM Express Connector AB Location**

| Pin No. | Description | Pin No. | Description |
|---|---|---|---|
| A1 | GND | B1 | GND |
| A2 | GBE0_MDI3- | B2 | GBE0_ACT# |
| A3 | GBE0_MDI3+ | B3 | LPC_FRAME# |
| A4 | GBE0_LINK100# | B4 | LPC_AD0 |
| A5 | GBE0_LINK1000# | B5 | LPC_AD1 |
| A6 | GBE0_MDI2- | B6 | LPC_AD2 |
| A7 | GBE0_MDI2+ | B7 | LPC_AD3 |
| A8 | GBE0_LINK# | B8 | LPC_DRQ0# |
| A9 | GBE0_MDI1- | B9 | LPC_DRQ1# |
| A10 | GBE0_MDI1+ | B10 | LPC_CLK |
| A11 | GND | B11 | GND |
| A12 | GBE0_MDI0- | B12 | PWRBTN# |

| Pin No. | Description | Pin No. | Description |
|---|---|---|---|
| A13 | GBE0_MDI0+ | B13 | SMB_CK |
| A14 | GBE0_CTREF | B14 | SMB_DAT |
| A15 | SUS_S3# | B15 | SMB_ALERT# |
| A16 | SATA0_TX+ | B16 | SATA1_TX+ |
| A17 | SATA0_TX- | B17 | SATA1_TX- |
| A18 | SUS_S4# | B18 | SUS_STAT# |
| A19 | SATA0_RX+ | B19 | SATA1_RX+ |
| A20 | SATA0_RX- | B20 | SATA1_RX- |
| A21 | GND | B21 | GND |
| A22 | SATA2_TX+ | B22 | SATA3_TX+ |
| A23 | SATA2_TX- | B23 | SATA3_TX- |
| A24 | SUS_S5# | B24 | PWR_OK |
| A25 | SATA2_RX+ | B25 | SATA3_RX+ |
| A26 | SATA2_RX- | B26 | SATA3_RX- |
| A27 | BATLOW# | B27 | WDT |
| A28 | ATA_ACT# | B28 | AC_SDIN2 |
| A29 | AC_SYNC | B29 | AC_SDIN1 |
| A30 | AC_RST# | B30 | AC_SDIN0 |
| A31 | GND | B31 | GND |
| A32 | AC_BITCLK | B32 | SPKR |
| A33 | AC_SDOUT | B33 | I2C_CK |
| A34 | BIOS_DISABLE# | B34 | I2C_DAT |
| A35 | THRMTRIP# | B35 | THRM# |
| A36 | USB6- | B36 | USB7- |
| A37 | USB6+ | B37 | USB7+ |
| A38 | USB_6_7_OC# | B38 | USB_4_5_OC# |
| A39 | USB4- | B39 | USB5- |
| A40 | USB4+ | B40 | USB5+ |
| A41 | GND | B41 | GND |
| A42 | USB2- | B42 | USB3- |
| A43 | USB2+ | B43 | USB3+ |
| A44 | USB_2_3_OC# | B44 | USB_0_1_OC# |

| Pin No. | Description | Pin No. | Description |
|---|---|---|---|
| A45 | USB0- | B45 | USB1- |
| A46 | USB0+ | B46 | USB1+ |
| A47 | VCC_RTC | B47 | EXCD1_PERST# |
| A48 | EXCD0_PERST# | B48 | EXCD1_CPPE# |
| A49 | EXCD0_CPPE# | B49 | SYS_RESET# |
| A50 | LPC_SERIRQ | B50 | CB_RESET# |
| A51 | GND | B51 | GND |
| A52 | NC | B52 | NC |
| A53 | NC | B53 | NC |
| A54 | GPI0 | B54 | GPO1 |
| A55 | PCIE_TX4+ | B55 | PCIE_RX4+ |
| A56 | PCIE_TX4- | B56 | PCIE_RX4- |
| A57 | GND | B57 | GPO2 |
| A58 | PCIE_TX3+ | B58 | PCIE_RX3+ |
| A59 | PCIE_TX3- | B59 | PCIE_RX3- |
| A60 | GND | B60 | GND |
| A61 | PCIE_TX2+ | B61 | PCIE_RX2+ |
| A62 | PCIE_TX2- | B62 | PCIE_RX2- |
| A63 | GPI1 | B63 | GPO3 |
| A64 | PCIE_TX1+ | B64 | PCIE_RX1+ |
| A65 | PCIE_TX1- | B65 | PCIE_RX1- |
| A66 | GND | B66 | WAKE0# |
| A67 | GPI2 | B67 | WAKE1# |
| A68 | PCIE_TX0+ | B68 | PCIE_RX0+ |
| A69 | PCIE_TX0- | B69 | PCIE_RX0- |
| A70 | GND | B70 | GND |
| A71 | LVDS_A0+ | B71 | LVDS_B0+ |
| A72 | LVDS_A0- | B72 | LVDS_B0- |
| A73 | LVDS_A1+ | B73 | LVDS_B1+ |
| A74 | LVDS_A1- | B74 | LVDS_B1- |
| A75 | LVDS_A2+ | B75 | LVDS_B2+ |
| A76 | LVDS_A2- | B76 | LVDS_B2- |

| Pin No. | Description | Pin No. | Description |
|---|---|---|---|
| A77 | LVDS_VDD_EN | B77 | LVDS_B3+ |
| A78 | LVDS_A3+ | B78 | LVDS_B3- |
| A79 | LVDS_A3- | B79 | LVDS_BKLT_EN |
| A80 | GND | B80 | GND |
| A81 | LVDS_A_CK+ | B81 | LVDS_B_CK+ |
| A82 | LVDS_A_CK- | B82 | LVDS_B_CK- |
| A83 | LVDS_I2C_CK | B83 | LVDS_BKLT_CTRL |
| A84 | LVDS_I2C_DAT | B84 | 5 VSB |
| A85 | GPI3 | B85 | 5 VSB |
| A86 | KBD_RST# | B86 | 5 VSB |
| A87 | KBD_A20GATE | B87 | 5 VSB |
| A88 | PCIE0_CK_REF+ | B88 | RSVD |
| A89 | PCIE0_CK_REF- | B89 | VGA_RED |
| A90 | GND | B90 | GND |
| A91 | RSVD | B91 | VGA_GRN |
| A92 | RSVD | B92 | VGA_BLU |
| A93 | GPO0 | B93 | VGA_HSYNC |
| A94 | RSVD | B94 | VGA_VSYNC |
| A95 | RSVD | B95 | VGA_I2C_CK |
| A96 | GND | B96 | VGA_I2C_DAT |
| A97 | +V12 | B97 | TV_DAC_A |
| A98 | +V12 | B98 | TV_DAC_B |
| A99 | +V12 | B99 | TV_DAC_C |
| A100 | GND | B100 | GND |
| A101 | +V12 | B101 | +V12 |
| A102 | +V12 | B102 | +V12 |
| A103 | +V12 | B103 | +V12 |
| A104 | +V12 | B104 | +V12 |
| A105 | +V12 | B105 | +V12 |
| A106 | +V12 | B106 | +V12 |
| A107 | +V12 | B107 | +V12 |
| A108 | +V12 | B108 | +V12 |

| Pin No. | Description | Pin No. | Description |
|---|---|---|---|
| A109 | +V12 | B109 | +V12 |
| A110 | GND | B110 | GND |

**Table 3-3: COM Express Connector AB Pin Definitions**

### 3.2.3 SO-DIMM Connector

**CN Label:** **DIMM1**

**CN Type:** SO-DIMM connector

**CN Location:** See **Figure 3-5**

The SO-DIMM socket is for installing SO-DIMM memory.

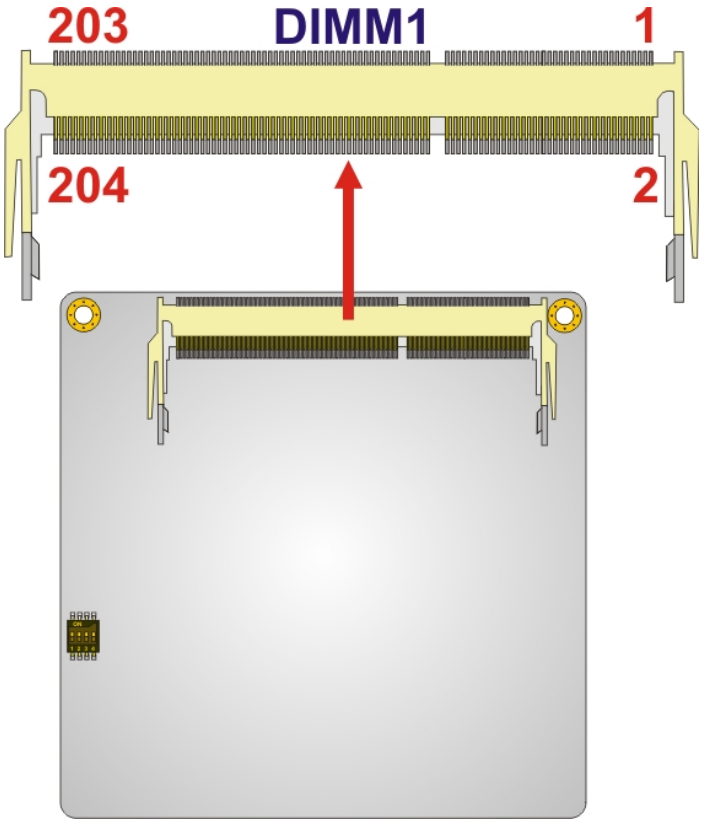


**Figure 3-5: SO-DIMM Connector Location**

### 3.2.4 SPI Connector

**CN Label:** **SPI1**

**CN Type:** 6-pin connector

**CN Location:** See **Figure 3-6**

**CN Pinouts:** See **Table 3-4**

The SPI connector is for flashing new BIOS onto the SPI BIOS chip.

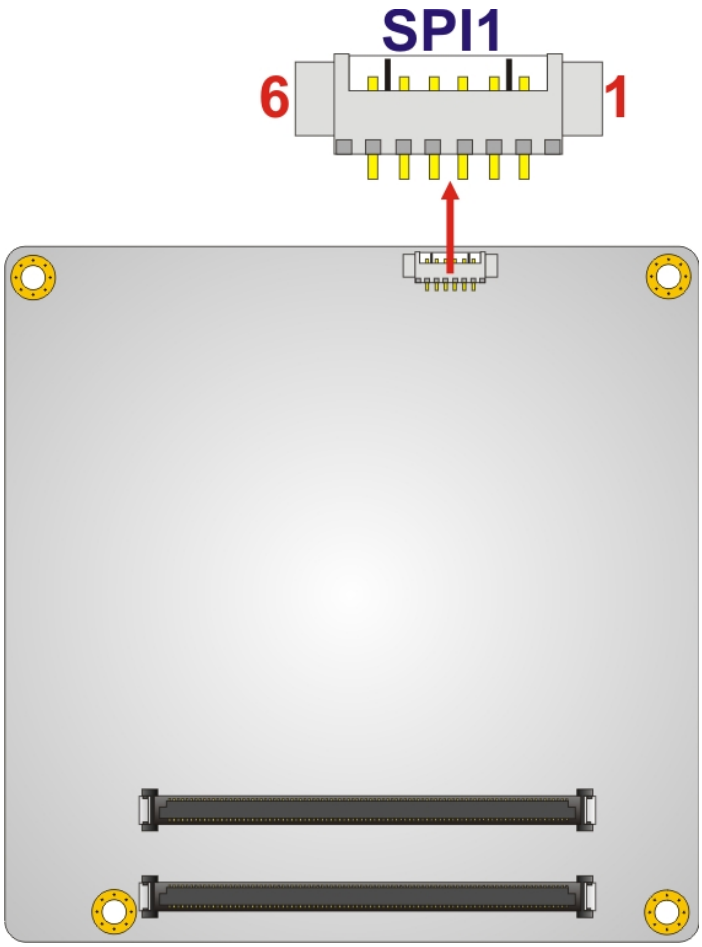


**Figure 3-6: SPI Flash Connector Location**

| Pin No. | Description |
|---|---|
| 1 | GND |
| 2 | SPI_MOSI |
| 3 | SPI_CLK |
| 4 | SPI_MISO |
| 5 | SPI_CS# |

| Pin No. | Description |
|---|---|
| 6 | SPI_VCC (+3.3V) |

**Table 3-4: SPI Flash Connector Pin Definitions**

Chapter

4

# Installation

## 4.1 Installation Considerations

**NOTE:**

The following installation notices and installation considerations should be read and understood before the CPU module is installed. All installation notices pertaining to the installation of the CPU module should be strictly adhered to. Failing to adhere to these precautions may lead to severe damage of the CPU module and injury to the person installing the CPU module.

Before and during the installation of the ICE-PV-N4551/D5251, please do the following:

- Read the user manual
  - The user manual provides a complete description of the ICE-PV-N4551/D5251, installation instructions and configuration options.
- Wear an electrostatic discharge cuff (ESD)
  - Electronic components are easily damaged by ESD. Wearing an ESD cuff removes ESD from the body and helps prevent ESD damage.
- Place the CPU module on an antistatic pad
  - When installing or configuring the CPU module, place it on an antistatic pad. This helps to prevent potential ESD damage.
- Turn off all power to the ICE-PV-N4551/D5251
  - When working with the CPU module, make sure that it is disconnected from all power supplies and that no electricity is being fed into the system.

Before and during the installation of the ICE-PV-N4551/D5251 DO NOT:

- **DO NOT** remove any of the stickers on the PCB board. These stickers are required for warranty validation.
- **DO NOT** use the product before verifying all the cables and power connectors are properly connected.
- **DO NOT** allow screws to come in contact with the PCB circuit, connector pins, or its components.

## 4.2 Unpacking

**NOTE:**

If any of the items listed below are missing when the ICE-PV-N4551/D5251 is unpacked, do not proceed with the installation and contact the ICE-PV-N4551/D5251 reseller or vendor.

### 4.2.1 Unpacking Precautions

Before installing the ICE-PV-N4551/D5251, unpack the CPU module. Some components on ICE-PV-N4551/D5251 are very sensitive to static electricity and can be damaged by a sudden rush of power. To protect it from being damaged, follow these precautions:

- The user should ground them self to remove any static charge before touching the ICE-PV-N4551/D5251. To do so wear a grounded wrist strap at all times or frequently touch any conducting materials that is connected to the ground.
- Handle the ICE-PV-N4551/D5251 by its edges. Do not touch the IC chips, leads or circuitry if not necessary.

Do not place a PCB on top of an anti-static bag. Only the inside of the bag is safe from static discharge.

### 4.2.2 Checklist

When unpacking the ICE-PV-N4551/D5251, please make sure that the package contains the following items.

- 1 x ICE-PV-N4551/D5251 embedded module
- 1 x Heatspreader
- 1 x Utility CD
- 1 x QIG

If one or more of these items are missing, please contact the reseller or vendor the ICE-PV-N4551/D5251 was purchased from and do not proceed any further with the installation.

## 4.3 SO-DIMM Installation

To install a SO-DIMM into a SO-DIMM socket, please follow the steps below and refer to **Figure 4-1**.

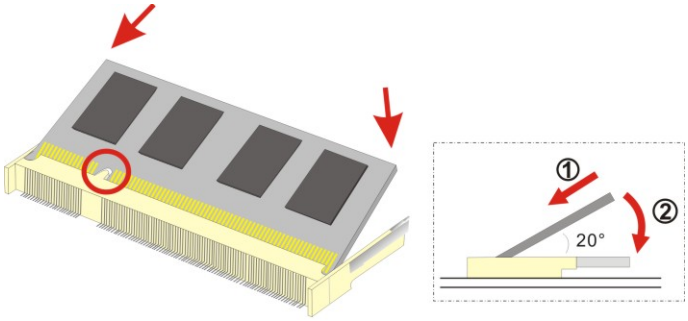


**Figure 4-1: SO-DIMM Installation**

**Step 1:** **Locate the SO-DIMM socket**. Place the ICE-PV-N4551/D5251 on an anti-static pad.

**Step 2:** **Align the SO-DIMM with the socket**. The SO-DIMM must be oriented in such a way that the notch in the middle of the SO-DIMM must be aligned with the plastic bridge in the socket.

**Step 3:** **Insert the SO-DIMM**. Push the SO-DIMM chip into the socket at an angle. (See **Figure 4-1**)

**Step 4:** **Open the SO-DIMM socket arms**. Gently pull the arms of the SO-DIMM socket out and push the rear of the SO-DIMM down. (See **Figure 4-1**)

**Step 5:** **Secure the SO-DIMM**. Release the arms on the SO-DIMM socket. They clip into place and secure the SO-DIMM in the socket.

## 4.4 Jumper Settings

**NOTE:**

A jumper is a metal bridge used to close an electrical circuit. It consists of two or three metal pins and a small metal clip (often protected by a plastic cover) that slides over the pins to connect them. To CLOSE/SHORT a jumper means connecting the pins of the jumper with the plastic clip and to OPEN a jumper means removing the plastic clip from a jumper.

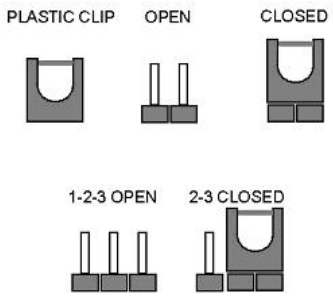


**Jumper Locations**

Before the ICE-PV-N4551/D5251 is installed in the system, the jumpers must be set in accordance with the desired configuration. The jumpers on the ICE-PV-N4551/D5251 are listed in **Table 4-1** and shown in **Figure 4–2**.

| Description | Type | Label |
|---|---|---|
| LVDS panel resolution | 4-in-1 switch | SW1 |

**Table 4-1: Jumpers**

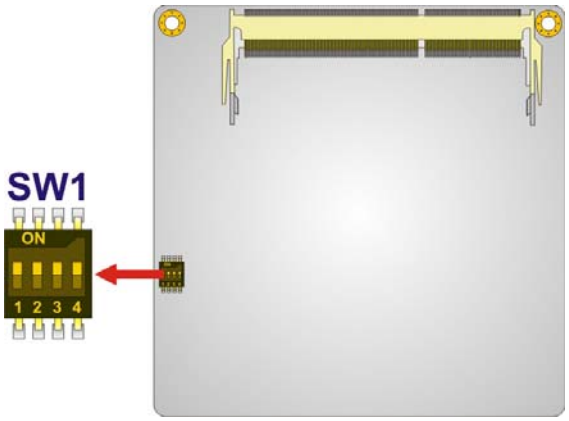


**Figure 4–2: Jumper Locations**

### 4.4.1 LVDS Panel Resolution

**Jumper Label:** **SW1**

**Jumper Type:** 4-in-1 switch

**Jumper Settings:** See **Table 4-2**

**Jumper Location:** See **Figure 4–2**

This switch sets the resolution of the panel attached to the LVDS output. Settings are shown in **Table 4-2**.

| 1-8 | 2-7 | 3-6 | 4-5 | DESCRIPTION | VBIOS ID |
|---|---|---|---|---|---|
| OPEN | OPEN | OPEN | OPEN | 640 x 480 (18-bit) | 1 |
| CLOSED | OPEN | OPEN | OPEN | 800 x 480 (18-bit) | 2 |
| OPEN | CLOSED | OPEN | OPEN | 800 x 600 (18-bit) | 3 |
| CLOSED | CLOSED | OPEN | OPEN | 1024 x 768 (18-bit) | 5 |
| OPEN | OPEN | CLOSED | OPEN | 1280 x 1024 (18-bit) | 11 |
| CLOSED | OPEN | CLOSED | OPEN | 1366 x 768 (18-bit) | 10 |
| OPEN | CLOSED | CLOSED | OPEN | 1280 x 800 (18-bit) | 7 |
| CLOSED | CLOSED | CLOSED | OPEN | 1280 x 600 (18-bit) | 15 |

**Table 4-2: LVDS Panel Resolution**

## 4.5 Mounting the ICE-PV-N4551/D5251

**WARNING!**

Never run the embedded module without an appropriate heat sink.

**WARNING!**

Please note that the installation instructions described in this manual should be carefully followed in order to avoid damage to the CPU module components and injury to the user.

**WARNING!**

When installing electronic components onto the embedded module or installing the embedded module onto the baseboard, always take anti-static precautions in order to prevent ESD damage to the CPU module and other electronic components like the CPU and SO-DIMM module.

The ICE-PV-N4551/D5251 embedded module has two standard COM Express connectors on the reverse side. Align these COM Express connectors with the corresponding connectors on a compatible baseboard. Gently push the embedded module down to ensure the connectors are properly connected.

Baseboard can be designed by the end user, customized by IEI, or purchased from IEI. For more information visit the IEI website (www.ieiworld.com) or contact an IEI sales representative.

Chapter

5

# BIOS Setup

## 5.1 Introduction

**NOTE:**

The BIOS items shown below are from an ICE-PV-N4551/D5251 installed on the ICE-DB-9S-R10 reference carrier board. The ICE-DB-9S-R10 reference carrier board is available from iEi, contact sales@iei.com.tw or go to http://www.ieiworld.com for more information.

The BIOS is programmed onto the BIOS chip. The BIOS setup program allows changes to certain system settings. This chapter outlines the options that can be changed.

### 5.1.1 Starting Setup

The UEFI BIOS is activated when the computer is turned on. The setup program can be activated in one of two ways.

1. Press the **F2** key as soon as the system is turned on or
2. Press the **F2** key when the "**Press F2 to enter SETUP**" message appears on the screen.

If the message disappears before the **F2** key is pressed, restart the computer and try again.

### 5.1.2 Using Setup

Use the arrow keys to highlight items, press **ENTER** to select, use the PageUp and PageDown keys to change entries, press **F1** for help and press **Esc** to quit. Navigation keys are shown in.

| Key | Function |
|---|---|
| Up arrow | Move to the item above |
| Down arrow | Move to the item below |
| Left arrow | Move to the item on the left hand side |

| Key | Function |
|---|---|
| Right arrow | Move to the item on the right hand side |
| + | Increase the numeric value or make changes |
| - | Decrease the numeric value or make changes |
| Page up | Move to the next page |
| Page down | Move to the previous page |
| Esc | Main Menu – Quit and do not save changes into CMOS Status Page Setup Menu and Option Page Setup Menu -- Exit current page and return to Main Menu |
| F1 | General help, only for Status Page Setup Menu and Option Page Setup Menu |
| F9 | Load optimized defaults |
| F10 | Save changes and Exit BIOS |

**Table 5-1: BIOS Navigation Keys**

### 5.1.3 Getting Help

When **F1** is pressed a small help window describing the appropriate keys to use and the possible selections for the highlighted item appears. To exit the Help Window press **Esc** or the **F1** key again.

### 5.1.4 Unable to Reboot After Configuration Changes

If the computer cannot boot after changes to the system configuration is made, CMOS defaults. Use the jumper described in Chapter **4**.

### 5.1.5 BIOS Menu Bar

The **menu bar** on top of the BIOS screen has the following main items:

- Main – Changes the basic system configuration.
- Advanced – Changes the advanced system settings.
- Chipset – Changes the chipset settings.
- Boot – Changes the system boot configuration.

- Security – Sets User and Supervisor Passwords.
- Save & Exit – Selects exit options and loads default settings

The following sections completely describe the configuration options found in the menu items at the top of the BIOS screen and listed above.

## 5.2 Main

The **Main** BIOS menu (**BIOS Menu 1**) appears when the **BIOS Setup** program is entered. The **Main** menu gives an overview of the basic system information.

```
Aptio Setup Utility – Copyright (C) 2011 American Megatrends, Inc.
 Main   Advanced   Chipset   Boot   Security   Save & Exit

BIOS Information                                  Set the Date. Use Tab to
BIOS Vendor                American Megatrends    switch between Data
Core Version               4.6.4.0 0.22           elements.
Compliency                 UEFI 2.0
Project Version            E355AR10.ROM
Build Date and Time        04/12/2011 17:11:01    ----------------------

                                                  ←→: Select Screen
System Date                [Wed 08/10/2011]       ↑ ↓: Select Item
System Time                [05:07:30]             EnterSelect
                                                  +/-: Change Opt.
Access Level               Administrator          F1:  General Help
                                                  F2:  Previous Values
                                                  F3:  Optimized Defaults
                                                  F4:  Save & Exit
                                                  ESC: Exit
Version 2.11.1210. Copyright (C) 2011 American Megatrends, Inc.
```

**BIOS Menu 1: Main**

### ➔ BIOS Information

The **BIOS Information** lists a brief summary of the BIOS. The fields in **BIOS Information** cannot be changed. The items shown in the system overview include:

- **BIOS Vendor:** Installed BIOS vendor
- **Core Version:** Current BIOS version
- **Compliency:** Current compliancy version
- **Project Version:** The board version
- **Build Date and Time:** Date the current BIOS version was made

The System Overview field also has two user configurable fields:

➔ **System Date [xx/xx/xx]**

Use the **System Date** option to set the system date. Manually enter the day, month and year.

➔ **System Time [xx:xx:xx]**

Use the **System Time** option to set the system time. Manually enter the hours, minutes and seconds.

## 5.3 Advanced

Use the **Advanced** menu (**BIOS Menu 2**) to configure the CPU and peripheral devices through the following sub-menus:

**WARNING!**

Setting the wrong values in the sections below may cause the system to malfunction. Make sure that the settings made are compatible with the hardware.

```
Aptio Setup Utility – Copyright (C) 2011 American Megatrends, Inc.
Main   Advanced   Chipset   Boot   Security   Save & Exit

> ACPI Settings                                   System ACPI Parameters.
> CPU Configuration
> IDE Configuration
> USB Configuration
> F75387 HardWare Monitor                         ----------------------
> Secondary Super IO Configuration
> WinBond W83627EHG HardWare Monitor              ←→: Select Screen
> Serial Port Console Redirection                 ↑ ↓: Select Item
                                                  EnterSelect
                                                  +/-: Change Opt.
                                                  F1:  General Help
                                                  F2:  Previous Values
                                                  F3:  Optimized Defaults
                                                  F4:  Save & Exit
                                                  ESC: Exit
Version 2.11.1210. Copyright (C) 2011 American Megatrends, Inc.
```

**BIOS Menu 2: Advanced**

### 5.3.1 ACPI Settings

Use the **ACPI Settings** menu (**BIOS Menu 3**) to configure the Advanced Configuration and Power Interface (ACPI) options.

```
Aptio Setup Utility – Copyright (C) 2011 American Megatrends, Inc.
Advanced

ACPI Sleep State                [S1 (CPU Stop Clock)]   Select the highest ACPI
                                                        sleep state the system
                                                        will enter, when the
                                                        SUSPEND button is
                                                        pressed.

                                                        ----------------------

                                                        ←→: Select Screen
                                                        ↑ ↓: Select Item
                                                        EnterSelect
                                                        +/-: Change Opt.
                                                        F1:  General Help
                                                        F2:  Previous Values
                                                        F3:  Optimized Defaults
                                                        F4:  Save & Exit
                                                        ESC: Exit
Version 2.11.1210. Copyright (C) 2011 American Megatrends, Inc.
```

**BIOS Menu 3: ACPI Settings**

➔ **ACPI Sleep State [S1 (CPU Stop Clock)]**

Use the **ACPI Sleep State** option to specify the sleep state the system enters when it is not being used.

| | |
|---|---|
| ➔ **S1 (CPU Stop Clock)** DEFAULT | The system enters S1 (POS) sleep state. The system appears off. The CPU is stopped; RAM is refreshed; the system is running in a low power mode. |
| ➔ **S3 (Suspend to RAM)** | The caches are flushed and the CPU is powered off. Power to the RAM is maintained. The computer returns slower to a working state, but more power is saved. |

## 5.3.2 CPU Configuration

Use the **CPU Configuration** menu (**BIOS Menu 4**) to view detailed CPU specifications and configure the CPU.

```
Aptio Setup Utility – Copyright (C) 2011 American Megatrends, Inc.
Advanced

CPU Configuration                                  Enabled for Windows XP
                                                   and Linux (OS optimized
Processor Type                  Intel(R) Atom(TM)  for Hyper-Threading
                                CPU D525 @ 1.80GHz Technology) and Disabled
EMT64                           Supported          for other OS (OS not
Processor Speed                 1800 MHz           optimized for
System Bus Speed                800 MHz            Hyper-Threading
Ratio Status                    9                  Technology)
Actual Ratio                    9
Processor Stepping              106ca
Microcode Revision              263                ----------------------
L1 Cache RAM                    2x56 k
L2 Cache RAM                    2x512 k            ←→: Select Screen
Processor Core                  Dual               ↑ ↓: Select Item
Hyper-Threading                 Supported          EnterSelect
                                                   +/-: Change Opt.
Hyper-Threading                 [Enabled]          F1:  General Help
Intel Virtualization Technology [Disabled]         F2:  Previous Values
                                                   F3:  Optimized Defaults
                                                   F4:  Save & Exit
                                                   ESC: Exit
Version 2.11.1210. Copyright (C) 2011 American Megatrends, Inc.
```

**BIOS Menu 4: CPU Configuration**

The CPU Configuration menu lists the following CPU details:

- Processor Type: Lists the brand name of the CPU being used
- EMT64: Indicates if the EM64T is supported by the CPU.
- Processor Speed: Lists the CPU processing speed
- System Bus Speed: Lists the system bus speed
- Ratio Status: Lists the ratio status
- Actual Ratio: Lists the actual ratio
- Processor Stepping: Lists the CPU processing stepping
- Microcode Revision: Lists the microcode revision
- L1 Cache RAM: Lists the CPU L1 cache size
- L2 Cache RAM: Lists the CPU L2 cache size
- Processor Core: Lists the number of the processor core
- Hyper-Threading: Indicates if the Intel® HT Technology is supported by the CPU.

➔ **Hyper Threading [Enabled]**

Use the **Hyper Threading** to enable or disable the CPU hyper threading function.

| | | |
|---|---|---|
| ➔ **Disabled** | | Disables the use of hyper threading technology |
| ➔ **Enabled** | **DEFAULT** | Enables the use of hyper threading technology |

➔ **Intel® Virtualization Technology [Disabled]**

Use the **Intel® Virtualization Technology** option to enable or disable virtualization on the system. When combined with third party software, Intel Virtualization technology allows several OSes to run on the same system at the same time.

| | | |
|---|---|---|
| ➔ **Disabled** | **DEFAULT** | Disables Intel Virtualization Technology. |
| ➔ **Enabled** | | Enables Intel Virtualization Technology. |

### 5.3.3 IDE Configuration

Use the **IDE Configuration** menu (**BIOS Menu 5**) to change and/or set the configuration of the IDE devices installed in the system.

```
Aptio Setup Utility – Copyright (C) 2011 American Megatrends, Inc.
Advanced

PATA Master                    Not Present        Select ATA or IDE
PATA Slave                     Not Present        configuration.

SATA Port0                     Not Present
SATA Port1                     Not Present        ---------------------
SATA Port2                     Not Present

                                                  ←→: Select Screen
ATA Or IDE Configuration       [Enhanced]         ↑ ↓: Select Item
  Configure SATA as            [IDE]              EnterSelect
                                                  +/-: Change Opt.
                                                  F1:  General Help
                                                  F2:  Previous Values
                                                  F3:  Optimized Defaults
                                                  F4:  Save & Exit
                                                  ESC: Exit
Version 2.11.1210. Copyright (C) 2011 American Megatrends, Inc.
```

**BIOS Menu 5: IDE Configuration**

➔ **ATA Or IDE Configurations [Enhanced]**

Use the **ATA Or IDE Configurations** option to configure the ATA/IDE controller.

➔ **Disabled** Disables the on-board ATA/IDE controller.

➔ **Enhanced** **DEFAULT** Configures the on-board ATA/IDE controller to be in Enhanced mode. In this mode, IDE channels and SATA channels are separated. This mode supports up to 6 storage devices. Some legacy OS do not support this mode.

➔ **Configure SATA as [IDE]**

Use the **Configure SATA as** option to configure SATA devices as normal IDE devices.

➔ **IDE** **DEFAULT** Configures SATA devices as normal IDE device.

➔ **AHCI** Configures SATA devices as AHCI device.

### 5.3.4 USB Configuration

Use the **USB Configuration** menu (**BIOS Menu 6**) to read USB configuration information and configure the USB settings.

```
Aptio Setup Utility – Copyright (C) 2011 American Megatrends, Inc.
Advanced

USB Configuration                                   Enable / Disable USB
                                                    Function.
USB Devices:
      1 Keyboard                                    ---------------------
                                                    ←→: Select Screen
USB Function                    [Enabled]           ↑ ↓: Select Item
USB 2.0(EHCI) Support           [Enabled]           EnterSelect
Legacy USB Support              [Enabled]           +/-: Change Opt.
                                                    F1:  General Help
                                                    F2:  Previous Values
                                                    F3:  Optimized Defaults
                                                    F4:  Save & Exit
                                                    ESC: Exit
Version 2.11.1210. Copyright (C) 2011 American Megatrends, Inc.
```

**BIOS Menu 6: USB Configuration**

➔ **USB Devices**

The **USB Devices Enabled** field lists the USB devices that are enabled on the system

➔ **USB Function [Enabled]**

Use the **USB Function** BIOS option to enable or disable USB function support.

➔ **Disabled** USB function support disabled

➔ **Enabled** DEFAULT USB function support enabled

➔ **USB 2.0(EHCI) Support [Enabled]**

Use the **USB 2.0(EHCI) Support** BIOS option to enable or disable USB 2.0 (EHCI) support.

| | | |
|---|---|---|
| ➔ **Disabled** | | USB 2.0 (EHCI) support disabled |
| ➔ **Enabled** | **DEFAULT** | USB 2.0 (EHCI) support enabled |

➔ **Legacy USB Support [Enabled]**

Use the **Legacy USB Support** BIOS option to enable USB mouse and USB keyboard support. Normally if this option is not enabled, any attached USB mouse or USB keyboard does not become available until a USB compatible operating system is fully booted with all USB drivers loaded. When this option is enabled, any attached USB mouse or USB keyboard can control the system even when there is no USB driver loaded onto the system.

| | | |
|---|---|---|
| ➔ **Enabled** | **DEFAULT** | Legacy USB support enabled |
| ➔ **Disabled** | | Legacy USB support disabled |
| ➔ **Auto** | | Legacy USB support disabled if no USB devices are connected |

### 5.3.5 F75387 HardWare Monitor

The F75387 HardWare Monitor menu (**BIOS Menu 7**) shows the operating temperature, fan speeds and system voltages.

```
Aptio Setup Utility – Copyright (C) 2011 American Megatrends, Inc.
Advanced

PC Health Status                                  Select temperature
                                                  source
CPU Temperature                  :+89 C
System Temperature               :+64 C
FAN 3 Speed                      :N/A
Vcc3                             :+3.312 V
VCORE                            :+1.168 V
3.3V                             :+3.312 V
VBAT                             :+3.400 V        ---------------------
Temperature Source               [Manual Fan]     ←→: Select Screen
                                                  ↑ ↓: Select Item
                                                  EnterSelect
                                                  +/-: Change Opt.
                                                  F1:  General Help
                                                  F2:  Previous Values
                                                  F3:  Optimized Defaults
                                                  F4:  Save & Exit
                                                  ESC: Exit
Version 2.11.1210. Copyright (C) 2011 American Megatrends, Inc.
```

**BIOS Menu 7: F75387 HardWare Monitor**

### ➔ PC Health Status

The following system parameters and values are shown. The system parameters that are monitored are:

- CPU Temperature
- System Temperature
- FAN 3 Speed
- Vcc3
- VCORE
- 3.3V
- VBAT

### ➔ Temperature Source [Manual Fan]

Use the **Temperature Source** BIOS option to set the fan speed as manual or automatic.

| | | |
|---|---|---|
| ➔ **Manual Fan** | **DEFAULT** | Enables manual fan speed settings. |
| ➔ **Auto Fan** | | Enables auto fan speed settings. |

## 5.3.6 Secondary Super IO Configuration

The **Secondary Super IO Configuration** menu (**BIOS Menu 8**) displays IO chip type and the submenus for configuring the COM ports 4-6.

```
Aptio Setup Utility – Copyright (C) 2011 American Megatrends, Inc.
Advanced

Secondary Super IO Configuration                    Set Parameters of Serial
                                                    Port 2 (COMC)
Super IO Chip                    Fintek F81216
> COM 4 Configuration                               ---------------------
> COM 5 Configuration                               ←→: Select Screen
> COM 6 Configuration                               ↑ ↓: Select Item
                                                    EnterSelect
                                                    +/-: Change Opt.
                                                    F1:  General Help
                                                    F2:  Previous Values
                                                    F3:  Optimized Defaults
                                                    F4:  Save & Exit
                                                    ESC: Exit

Version 2.11.1210. Copyright (C) 2011 American Megatrends, Inc.
```

**BIOS Menu 8: Secondary Super IO Configuration**

### 5.3.6.1 COM 3 Configuration

➔ **Serial Port [Enabled]**

Use the **Serial Port** option to enable or disable the serial port.

| | | |
|---|---|---|
| ➔ **Disabled** | | Disable the serial port |
| ➔ **Enabled** | **DEFAULT** | Enable the serial port |

➔ **Change Settings [Auto]**

Use the **Change Settings** option to change the serial port IO port address and interrupt address.

| | | |
|---|---|---|
| ➔ **Auto** | **DEFAULT** | The serial port IO port address and interrupt address are automatically detected. |

- **IO=2C0h; IRQ=10** — Serial Port I/O port address is 2C0h and the interrupt address is IRQ10
- **IO=2C0h; IRQ=10, 11** — Serial Port I/O port address is 2C0h and the interrupt address is IRQ10, 11
- **IO=2C8h; IRQ=10, 11** — Serial Port I/O port address is 2C8h and the interrupt address is IRQ10, 11
- **IO=2D0h; IRQ=10, 11** — Serial Port I/O port address is 2D0h and the interrupt address is IRQ10, 11
- **IO=2D8h; IRQ=10, 11** — Serial Port I/O port address is 2D8h and the interrupt address is IRQ10, 11

### 5.3.6.2 COM 4 Configuration

➔ **Serial Port [Enabled]**

Use the **Serial Port** option to enable or disable the serial port.

- **Disabled** — Disable the serial port
- **Enabled** DEFAULT — Enable the serial port

➔ **Change Settings [Auto]**

Use the **Change Settings** option to change the serial port IO port address and interrupt address.

- **Auto** DEFAULT — The serial port IO port address and interrupt address are automatically detected.
- **IO=2C8h; IRQ=10** — Serial Port I/O port address is 2C8h and the interrupt address is IRQ10
- **IO=2C0h; IRQ=10, 11** — Serial Port I/O port address is 2C0h and the interrupt address is IRQ10, 11
- **IO=2C8h; IRQ=10, 11** — Serial Port I/O port address is 2C8h and the interrupt address is IRQ10, 11

- **IO=2D0h; IRQ=10, 11** — Serial Port I/O port address is 2D0h and the interrupt address is IRQ10, 11
- **IO=2D8h; IRQ=10, 11** — Serial Port I/O port address is 2D8h and the interrupt address is IRQ10, 11

### 5.3.6.3 COM 5 Configuration

➔ **Serial Port [Enabled]**

Use the **Serial Port** option to enable or disable the serial port.

- **Disabled** — Disable the serial port
- **Enabled** DEFAULT — Enable the serial port

➔ **Change Settings [Auto]**

Use the **Change Settings** option to change the serial port IO port address and interrupt address.

- **Auto** DEFAULT — The serial port IO port address and interrupt address are automatically detected.
- **IO=2D0h; IRQ=10** — Serial Port I/O port address is 2D0h and the interrupt address is IRQ10
- **IO=2C0h; IRQ=10, 11** — Serial Port I/O port address is 2C0h and the interrupt address is IRQ10, 11
- **IO=2C8h; IRQ=10, 11** — Serial Port I/O port address is 2C8h and the interrupt address is IRQ10, 11
- **IO=2D0h; IRQ=10, 11** — Serial Port I/O port address is 2D0h and the interrupt address is IRQ10, 11
- **IO=2D8h; IRQ=10, 11** — Serial Port I/O port address is 2D8h and the interrupt address is IRQ10, 11

### 5.3.6.4 COM 6 Configuration

➔ **Serial Port [Enabled]**

Use the **Serial Port** option to enable or disable the serial port.

| | | |
|---|---|---|
| ➔ **Disabled** | | Disable the serial port |
| ➔ **Enabled** | **DEFAULT** | Enable the serial port |

➔ **Change Settings [Auto]**

Use the **Change Settings** option to change the serial port IO port address and interrupt address.

| | | |
|---|---|---|
| ➔ **Auto** | **DEFAULT** | The serial port IO port address and interrupt address are automatically detected. |
| ➔ **IO=2D8h; IRQ=10** | | Serial Port I/O port address is 2D8h and the interrupt address is IRQ10 |
| ➔ **IO=2C0h; IRQ=10, 11** | | Serial Port I/O port address is 2C0h and the interrupt address is IRQ10, 11 |
| ➔ **IO=2C8h; IRQ=10, 11** | | Serial Port I/O port address is 2C8h and the interrupt address is IRQ10, 11 |
| ➔ **IO=2D0h; IRQ=10, 11** | | Serial Port I/O port address is 2D0h and the interrupt address is IRQ10, 11 |
| ➔ **IO=2D8h; IRQ=10, 11** | | Serial Port I/O port address is 2D8h and the interrupt address is IRQ10, 11 |

➔ **Select RS232/422/485 [RS232]**

Use the **Select RS232/422/485** option to set the serial port communications mode.

| | | |
|---|---|---|
| ➔ **RS232** | | Sets the serial port for RS-232 communications. |
| ➔ **RS422/RS485** | **DEFAULT** | Sets the serial port for RS422/485 communications. |

## 5.3.7 Super IO Configuration

Use the **Super IO Configuration** menu (**BIOS Menu 9**) contains the submenus for changing the FDD controllers, parallel ports and serial ports.

```
Aptio Setup Utility – Copyright (C) 2011 American Megatrends, Inc.
Advanced

 Super IO Configuration                          Set Parameters of Floppy
                                                 Disk Controller (FDC)
 Super IO Chip                  Winbond W83627EHG
> Floppy Disk Controller Configuration
> COM 1 Configuration                            ---------------------
> COM 2 Configuration                            ←→: Select Screen
> Parallel Port Configuration                    ↑ ↓: Select Item
                                                 EnterSelect
                                                 +/-: Change Opt.
                                                 F1:  General Help
                                                 F2:  Previous Values
                                                 F3:  Optimized Defaults
                                                 F4:  Save & Exit
                                                 ESC: Exit
Version 2.11.1210. Copyright (C) 2011 American Megatrends, Inc.
```

**BIOS Menu 9: Chipset**

### 5.3.7.1 Floppy Disk Controller Configuration

➔ **Floppy Disk Controller [Enabled]**

Use the **Floppy Disk Controller** option to enable or disable the floppy disk drive.

| | | |
|---|---|---|
| ➔ **Disabled** | | Disables the floppy disk controller. |
| ➔ **Enabled** | **DEFAULT** | Enables the floppy disk controller. |

➔ **Change Settings [Auto]**

Use the **Change Settings** option to set the serial port IO and interrupt addresses.

| | | |
|---|---|---|
| ➔ **Auto** | **DEFAULT** | Disables the floppy disk controller. |
| ➔ **IO=3F0h; IRQ=6; DMA=2** | | Serial Port I/O port address is 3F0h, the interrupt address is IRQ6, and the DMA is 2. |

➔ **Device Mode [Read Write]**

Use the **Device Mode** option to set the floppy disk controller mode.

| | | |
|---|---|---|
| ➔ **Read Write** | **DEFAULT** | Sets device mode to Read/Write. |
| ➔ **Write Protect** | | Sets the device mode to Write/Protect. |

### 5.3.7.2 COM 1 Configuration

➔ **Serial Port [Enabled]**

Use the **Serial Port** option to enable or disable the serial port.

| | | |
|---|---|---|
| ➔ **Disabled** | | Disable the serial port |
| ➔ **Enabled** | **DEFAULT** | Enable the serial port |

➔ **Change Settings [Auto]**

Use the **Change Settings** option to change the serial port IO port address and interrupt address.

| | | |
|---|---|---|
| ➔ **Auto** | **DEFAULT** | The serial port IO port address and interrupt address are automatically detected. |
| ➔ **IO=3F8h; IRQ=4** | | Serial Port I/O port address is 3F8h and the interrupt address is IRQ4 |
| ➔ **IO=3F8h; IRQ=3, 4, 5, 6, 7, 10, 11, 12** | | Serial Port I/O port address is 3F8h and the interrupt address is IRQ3, 4, 5, 6, 7, 10, 11, 12 |
| ➔ **IO=2F8h; IRQ=3, 4, 5, 6, 7, 10, 11, 12** | | Serial Port I/O port address is 2F8h and the interrupt address is IRQ3, 4, 5, 6, 7, 10, 11, 12 |

- **IO=3E8h; IRQ=3, 4, 5, 6, 7, 10, 11, 12** — Serial Port I/O port address is 3E8h and the interrupt address is IRQ3, 4, 5, 6, 7, 10, 11, 12
- **IO=2E8h; IRQ=3, 4, 5, 6, 7, 10, 11, 12** — Serial Port I/O port address is 2E8h and the interrupt address is IRQ3, 4, 5, 6, 7, 10, 11, 12

### 5.3.7.3 COM 2 Configuration

➔ **Serial Port [Enabled]**

Use the **Serial Port** option to enable or disable the serial port.

- **Disabled** — Disable the serial port
- **Enabled** DEFAULT — Enable the serial port

➔ **Select Serial or IrDA [Serial Port]**

Use the **Select Serial or IrDA** option to set the COM 2 device mode.

- **Serial Port** DEFAULT — Enables Serial Port mode.
- **IrDA** — Enables IrDA mode.

➔ **Change Settings [Auto]**

Use the **Change Settings** option to change the serial port IO port address and interrupt address.

- **Auto** DEFAULT — The serial port IO port address and interrupt address are automatically detected.
- **IO=2F8h; IRQ=3** — Serial Port I/O port address is 2F8h and the interrupt address is IRQ3

- **IO=3F8h; IRQ=3, 4, 5, 6, 7, 10, 11, 12** — Serial Port I/O port address is 3F8h and the interrupt address is IRQ3, 4, 5, 6, 7, 10, 11, 12
- **IO=2F8h; IRQ=3, 4, 5, 6, 7, 10, 11, 12** — Serial Port I/O port address is 2F8h and the interrupt address is IRQ3, 4, 5, 6, 7, 10, 11, 12
- **IO=3E8h; IRQ=3, 4, 5, 6, 7, 10, 11, 12** — Serial Port I/O port address is 3E8h and the interrupt address is IRQ3, 4, 5, 6, 7, 10, 11, 12
- **IO=2E8h; IRQ=3, 4, 5, 6, 7, 10, 11, 12** — Serial Port I/O port address is 2E8h and the interrupt address is IRQ3, 4, 5, 6, 7, 10, 11, 12

### 5.3.7.4 Parallel Port Configuration

➔ **Parallel Port [Enabled]**

Use the **Parallel Port** option to enable or disable the parallel port.

- **Disabled** — Disable the serial port
- **Enabled** DEFAULT — Enable the serial port

➔ **Change Settings [Auto]**

Use the **Change Settings** option to change the serial port IO port address and interrupt address.

- **Auto** DEFAULT — The serial port IO port address and interrupt address are automatically detected.

| | |
|---|---|
| ➔ **IO=378h; IRQ=5** | Serial Port I/O port address is 378h and the interrupt address is IRQ5 |
| ➔ **IO=378h; IRQ=5, 6, 7, 10, 11, 12** | Serial Port I/O port address is 378h and the interrupt address is IRQ5, 6, 7, 10, 11, 12 |
| ➔ **IO=278h; IRQ=5, 6, 7, 10, 11, 12** | Serial Port I/O port address is 278h and the interrupt address is IRQ5, 6, 7, 10, 11, 12 |
| ➔ **IO=3BCh; IRQ=5, 6, 7, 10, 11, 12** | Serial Port I/O port address is 3BCh and the interrupt address is IRQ5, 6, 7, 10, 11, 12 |

➔ **Device Mode [Printer Mode]**

Use the **Device Mode** option to select the mode the parallel port operates in. Configuration options are listed below.

- Printer Mode **Default**
- SPP Mode
- EPP-1.9 and SPP Mode
- EPP-1.7 and SPP Mode
- ECP Mode
- ECP and EPP 1.9 Mode
- ECP and EPP 1.7 Mode

### 5.3.8 WinBond W83627EHG HardWare Monitor

The **WinBond W83627EHG HardWare Monitor** menu (**BIOS Menu 10**) shows the operating temperature, fan speeds and system voltages.

```
Aptio Setup Utility – Copyright (C) 2011 American Megatrends, Inc.
Advanced

WinBond W83627EHG HardWare Monitor                    Set Fan at fixed
                                                      Duty-Cycle Min=0 Max=255
CPU Fan Speed                    :N/A                 Please input Dec number:
Fan 2 Speed                      :N/A
+12V                             :+10.824 V
AVCC                             :+0.160 V
3VCC                             :+0.160 V
+3.3V                            :+3.200 V
VSB                              :+0.144 V
VBAT                             :+0.144 V            ---------------------
                                                      ←→: Select Screen
Set Fan Duty Cycle                                    ↑ ↓: Select Item
CPU Fan Setting                  255                  Enter Select
Fan 2 Setting                    255                  +/-: Change Opt.
                                                      F1:  General Help
                                                      F2:  Previous Values
                                                      F3:  Optimized Defaults
                                                      F4:  Save & Exit
                                                      ESC: Exit
Version 2.11.1210. Copyright (C) 2011 American Megatrends, Inc.
```

**BIOS Menu 10: F75387 HardWare Monitor**

➔ **CPU Fan Setting**

Use the + or – key to change the **CPU Fan Setting** value. Enter a decimal number between 0 and 255.

➔ **Fan 2 Setting**

Use the + or – key to change the **Fan 2 Setting** value. Enter a decimal number between 0 and 255.

### 5.3.9 Serial Port Console Redirection

The **Serial Port Console Redirection** menu (**BIOS Menu 11**) allows the console redirection options to be configured. Console redirection allows users to maintain a system remotely by re-directing keyboard input and text output through the serial port.

```
Aptio Setup Utility – Copyright (C) 2011 American Megatrends, Inc.
Advanced

 COM1                                          Console Redirection
 Console Redirection            [Disabled]     Enable or Disable.
> Console Redirection Settings

 COM2                                          ---------------------
 Console Redirection            [Disabled]     ←→: Select Screen
> Console Redirection Settings                  ↑ ↓: Select Item
                                               EnterSelect
 COM3                                          +/-: Change Opt.
 Console Redirection            [Disabled]     F1:  General Help
> Console Redirection Settings                  F2:  Previous Values
                                               F3:  Optimized Defaults
 COM4                                          F4:  Save & Exit
 Console Redirection            [Disabled]     ESC: Exit
> Console Redirection Settings

 COM5
 Console Redirection            [Disabled]
> Console Redirection Settings

 COM6
 Console Redirection            [Disabled]
> Console Redirection Settings

Version 2.11.1210. Copyright (C) 2011 American Megatrends, Inc.
```

**BIOS Menu 11: Chipset**

➔ **Console Redirection [Enabled]**

Use **Console Redirection** option to enable or disable the console redirection function.

| | | |
|---|---|---|
| ➔ **Disabled** | **DEFAULT** | Disabled the console redirection function |
| ➔ **Enabled** | | Enabled the console redirection function |

➔ **Terminal Type [ANSI]**

Use the **Terminal Type** option to specify the remote terminal type.

- ➔ **VT100** The target terminal type is VT100
- ➔ **VT100+** The target terminal type is VT100+
- ➔ **VT-UTF8** The target terminal type is VT-UTF8
- ➔ **ANSI** **DEFAULT** The target terminal type is ANSI

➔ **Bits per second [115200]**

Use the **Bits per second** option to specify the bits per second.

- 9600
- 19200
- 38400
- 57600
- 115200 **DEFAULT**

## 5.4 Chipset

Use the **Chipset** menu (**BIOS Menu 12**) to access the Northbridge and Southbridge configuration menus

**WARNING!**

Setting the wrong values for the Chipset BIOS selections in the Chipset BIOS menu may cause the system to malfunction.

```
Aptio Setup Utility – Copyright (C) 2011 American Megatrends, Inc.
Main   Advanced   Chipset   Boot   Security   Save & Exit

> Host Bridge                                   Host Bridge Parameters
> South Bridge
> Intel IGD SWSCI OpRegion

                                                ---------------------
                                                ←→: Select Screen
                                                ↑ ↓: Select Item
                                                EnterSelect
                                                +/-: Change Opt.
                                                F1:  General Help
                                                F2:  Previous Values
                                                F3:  Optimized Defaults
                                                F4:  Save & Exit
                                                ESC: Exit

Version 2.11.1210. Copyright (C) 2011 American Megatrends, Inc.
```

**BIOS Menu 12: Chipset**

### 5.4.1 Host Bridge Configuration

Use the **Host Bridge Configuration** menu (**BIOS Menu 13**) to configure the Northbridge chipset.

```
Aptio Setup Utility – Copyright (C) 2011 American Megatrends, Inc.
                    Chipset

******* Memory Information *******                Select Share Memory
Memory Frequency                 800 Mhz         Size.

Total Memory                     2048 MB

DIMM#0                           2048 MB

Share Memory Size                [8 MB]
Initate Graphic Adapter          [PEG/PCI]
                                                ---------------------
                                                ←→: Select Screen
                                                ↑ ↓: Select Item
                                                EnterSelect
                                                +/-: Change Opt.
                                                F1:  General Help
                                                F2:  Previous Values
                                                F3:  Optimized Defaults
                                                F4:  Save & Exit
                                                ESC: Exit

Version 2.11.1210. Copyright (C) 2011 American Megatrends, Inc.
```

**BIOS Menu 13: Host Bridge Chipset Configuration**

➔ **Share Memory Size [8 MB]**

Use the **Share Memory Size** option to set the amount of system memory allocated to the integrated graphics processor when the system boots. The system memory allocated can then only be used as graphics memory, and is no longer available to applications or the operating system. Configuration options are listed below:

- Disabled
- 8 MB **Default**

➔ **Initiate Graphics Adapter [PEG/PCI]**

Use the **Initiate Graphics Adapter** option to select the graphics controller used as the primary boot device. Select either an integrated graphics controller (IGD) or a combination of PCI graphics controller, a PCI express (PEG) controller or an IGD. Configuration options are listed below:

- IGD
- PCI/IGD
- PCI/PEG
- PEG/IGD
- PEG/PCI **DEFAULT**

### 5.4.2 South Bridge Configuration

Use the **South Bridge Configuration** menu (**BIOS Menu 14**) to configure the Southbridge chipset.

```
Aptio Setup Utility – Copyright (C) 2011 American Megatrends, Inc.
                    Chipset

Restore AC Power Loss            [Last State]      Select AC power state
HD Audio Controller              [Enabled]         when power is re-applied
Set Spread Spectrum function     [Disabled]        after a power failure.

                                                   ---------------------
                                                   ←→: Select Screen
                                                   ↑ ↓: Select Item
                                                   EnterSelect
                                                   +/-: Change Opt.
                                                   F1:  General Help
                                                   F2:  Previous Values
                                                   F3:  Optimized Defaults
                                                   F4:  Save & Exit
                                                   ESC: Exit
Version 2.11.1210. Copyright (C) 2011 American Megatrends, Inc.
```

**BIOS Menu 14:South Bridge Chipset Configuration**

➔ **Restore on AC Power Loss [Last State]**

Use the **Restore on AC Power Loss** BIOS option to specify what state the system returns to if there is a sudden loss of power to the system.

➔ **Power Off** The system remains turned off

➔ **Power On** The system turns on

➔ **Last State** **DEFAULT** The system returns to its previous state. If it was on, it turns itself on. If it was off, it remains off.

➔ **HD Audio [Enabled]**

Use the **HD Audio** option to enable or disable the High Definition Audio controller.

➔ **Disabled** The onboard High Definition Audio controller is disabled

➔ **Enabled** **DEFAULT** The onboard High Definition Audio controller automatically detected and enabled

➔ **Set Spread Spectrum Function [Disabled]**

The **Set Spread Spectrum Function** option can help to improve CPU EMI issues.

➔ **Disabled** **DEFAULT** The spread spectrum mode is disabled

➔ **Enabled** The spread spectrum mode is enabled

### 5.4.3 Intel IGD SWSCI OpRegion

Use the **Intel IGD SWSCI OpRegion** menu (**BIOS Menu 15**) to configure the video device connected to the system.

```
Aptio Setup Utility – Copyright (C) 2011 American Megatrends, Inc.
Advanced

Intel IGD SWSCI OpRegion Configuration                Select DVMT/Fixed Mode

DVMT Mode Select                  [DVMT Mode]
DVMT/FIXED Memory                 [Maximum]           ---------------------
IGD - Boot Type                   [CRT]               ←→: Select Screen
                                                      ↑ ↓: Select Item
                                                      EnterSelect
                                                      +/-: Change Opt.
                                                      F1:  General Help
                                                      F2:  Previous Values
                                                      F3:  Optimized Defaults
                                                      F4:  Save & Exit
                                                      ESC: Exit
Version 2.11.1210. Copyright (C) 2011 American Megatrends, Inc.
```

**BIOS Menu 15: Intel IGD SWSCI OpRegion**

➔ **DVMT Mode Select [DVMT Mode]**

Use the **DVMT Mode Select** option to select the Intel Dynamic Video Memory Technology (DVMT) operating mode.

➔ **Fixed Mode** A fixed portion of graphics memory is reserved as graphics memory.

➔ **DVMT Mode** **DEFAULT** Graphics memory is dynamically allocated according to the system and graphics needs.

➔ **DVMT/FIXED Memory [Maximum]**

Use the **DVMT/FIXED Memory** option to specify the maximum amount of memory that can be allocated as graphics memory. Configuration options are listed below.

- 128 MB
- 256 MB
- Maximum **Default**

➔ **IGD - Boot Type [CRT]**

Use the **IGD - Boot Type** option to select the display device used by the system when it boots. Configuration options are listed below.

- VBIOS Default
- CRT **DEFAULT**
- LFP
- CRT + LFP

## 5.5 Boot

Use the **Boot** menu (**BIOS Menu 16**) to configure system boot options.

```
      Aptio Setup Utility – Copyright (C) 2011 American Megatrends, Inc.
  Main    Advanced   Chipset    Boot    Security   Save & Exit

Boot Configuration                                  Select the keyboard
Boot NumLock State              [On]                NumLock state

Quiet Boot                      [Disabled]
Launch PXE OpROM                [Disabled]          ---------------------
                                                    ←→: Select Screen
Boot Option Priorities                              ↑ ↓: Select Item
                                                    EnterSelect
                                                    +/-: Change Opt.
                                                    F1:  General Help
                                                    F2:  Previous Values
                                                    F3:  Optimized Defaults
                                                    F4:  Save & Exit
                                                    ESC: Exit
        Version 2.11.1210. Copyright (C) 2011 American Megatrends, Inc.
```

**BIOS Menu 16: Boot**

➔ **Bootup NumLock State [On]**

Use the **Bootup NumLock State** BIOS option to specify if the number lock setting must be modified during boot up.

➔ **On** **DEFAULT** Allows the Number Lock on the keyboard to be enabled automatically when the computer system boots up. This allows the immediate use of the 10-key numeric keypad located on the right side of the keyboard. To confirm this, the Number Lock LED light on the keyboard is lit.

➔ **Off** Does not enable the keyboard Number Lock automatically. To use the 10-keys on the keyboard, press the Number Lock key located on the upper left-hand corner of the 10-key pad. The Number Lock LED on the keyboard lights up when the Number Lock is engaged.

➔ **Quiet Boot [Disabled]**

Use the **Quiet Boot** BIOS option to select the screen display when the system boots.

| | | |
|---|---|---|
| ➔ **Disabled** | **DEFAULT** | Normal POST messages displayed |
| ➔ **Enabled** | | OEM Logo displayed instead of POST messages |

➔ **Launch PXE OpROM [Disabled]**

Use the **Launch PXE OpROM** option to enable or disable boot option for legacy network devices.

| | | |
|---|---|---|
| ➔ **Disabled** | **DEFAULT** | Ignore all PXE Option ROMs |
| ➔ **Enabled** | | Load PXE Option ROMs |

## 5.6 Security

Use the **Security** menu (**BIOS Menu 17**) to set system and user passwords.

```
Aptio Setup Utility – Copyright (C) 2011 American Megatrends, Inc.
Main   Advanced   Chipset   Boot   Security   Save & Exit

Password Description                          Set Setup Administrator
                                              Password
If ONLY the Administrator's password is set,
then this only limits access to Setup and is
only asked for when entering Setup.           ---------------------
If ONLY the User's password is set, then this  ←→: Select Screen
is a power on password and must be entered to  ↑ ↓: Select Item
boot or enter Setup. In Setup the User will    EnterSelect
have Administrator rights.                     +/-: Change Opt.
The password must be 3 to 20 characters long.  F1:  General Help
                                               F2:  Previous Values
Administrator Password                         F3:  Optimized Defaults
User Password                                  F4:  Save & Exit
                                               ESC: Exit
Set User Password
Set Master Password

Version 2.11.1210. Copyright (C) 2011 American Megatrends, Inc.
```

**BIOS Menu 17: Security**

➔ **Administrator Password**

Use the **Administrator Password** to set or change an administrator password.

➔ **User Password**

Use the **User Password** to set or change a user password.

➔ **Set User Password**

Use the **Set User Password** to set or change an HDD user password.

**NOTE:**

After an HDD password is set or changed, it is recommended that user restart the system.

## 5.7 Exit

Use the **Exit** menu (**BIOS Menu 18**) to load default BIOS values, optimal failsafe values and to save configuration changes.

```
Aptio Setup Utility – Copyright (C) 2011 American Megatrends, Inc.
Main   Advanced   Chipset   Boot   Security   Save & Exit

Save Changes and Reset                    Reset the system after
Discard Changes and Reset                 saving the changes.

Restore Defaults
Save as User Defaults
Restore User Defaults

                                          ---------------------
                                          ←→: Select Screen
                                          ↑ ↓: Select Item
                                          EnterSelect
                                          +/-: Change Opt.
                                          F1:  General Help
                                          F2:  Previous Values
                                          F3:  Optimized Defaults
                                          F4:  Save & Exit
                                          ESC: Exit
Version 2.11.1210. Copyright (C) 2011 American Megatrends, Inc.
```

**BIOS Menu 18: Exit**

➔ **Save Changes and Reset**

Use the **Save Changes and Reset** option to save the changes made to the BIOS options and to exit the BIOS configuration setup program.

➔ **Discard Changes and Reset**

Use the **Discard Changes and Reset** option to exit the system without saving the changes made to the BIOS configuration setup program.

➔ **Restore Defaults**

Use the **Restore Defaults** option to load the optimal default values for each of the parameters on the Setup menus. **F3 key can be used for this operation.**

➔ **Save as User Defaults**

Use the **Save as User Defaults** option to save the changes done so far as user defaults.

➔ **Restore User Defaults**

Use the **Restore User Defaults** option to restore the user defaults to all the setup options.

Chapter

6

# Software Installation

## 6.1 Available Software Drivers

**NOTE:**

The content of the CD may vary throughout the life cycle of the product and is subject to change without prior notice. Visit the IEI website or contact technical support for the latest updates.

The following drivers can be installed on the system:

- Chipset
- Graphic
- LAN
- Audio
- SATA
- iSMM
- Manual
- TPM
- ION

Installation instructions are given below.

## 6.2 Starting the Driver Program

To access the driver installation programs, please do the following.

**Step 1:** Insert the CD-ROM that came with the system into a CD-ROM drive attached to the system.

**Step 2:** The screen in **Figure 6-1** appears.

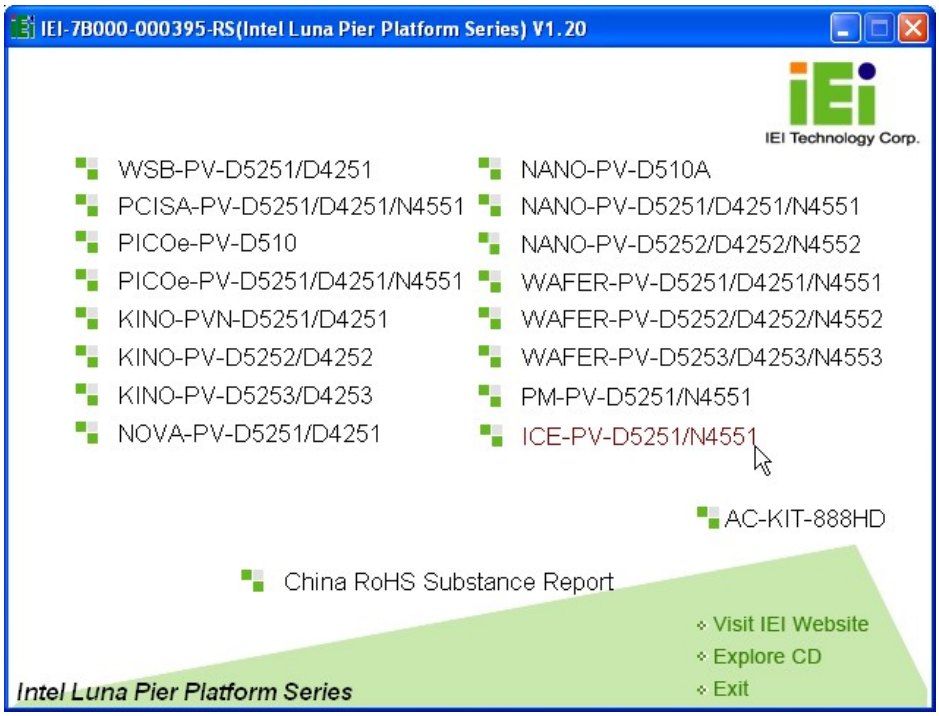


**Figure 6-1: Start Up Screen**

**Step 3:** Click **ICE-PV-N4551/D5251**.

**Step 4:** The list of drivers in **Figure 6-2** appears.

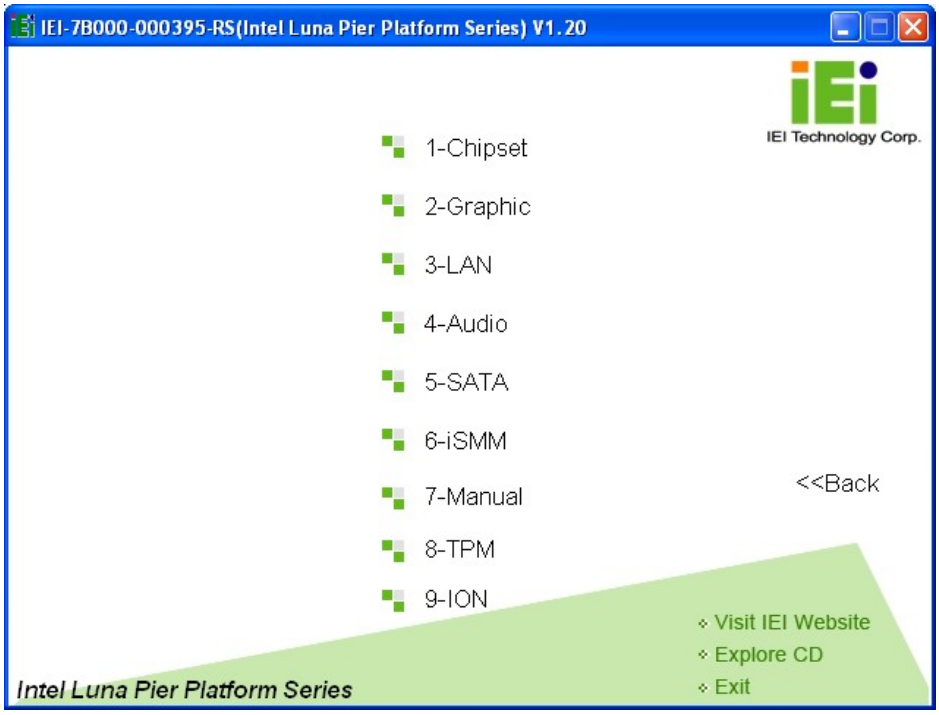


**Figure 6-2: Drivers**

**Step 5:** Install the necessary drivers from the list.

Appendix

A

# BIOS Options

Below is a list of BIOS configuration options in the BIOS chapter.

Appendix

B

# Terminology

| | |
|---|---|
| **AC '97** | Audio Codec 97 (AC'97) refers to a codec standard developed by Intel® in 1997. |
| **ACPI** | Advanced Configuration and Power Interface (ACPI) is an OS-directed configuration, power management, and thermal management interface. |
| **AHCI** | Advanced Host Controller Interface (AHCI) is a SATA Host controller register-level interface. |
| **ATA** | The Advanced Technology Attachment (ATA) interface connects storage devices including hard disks and CD-ROM drives to a computer. |
| **ARMD** | An ATAPI Removable Media Device (ARMD) is any ATAPI device that supports removable media, besides CD and DVD drives. |
| **ASKIR** | Amplitude Shift Keyed Infrared (ASKIR) is a form of modulation that represents a digital signal by varying the amplitude ("volume") of the signal. A low amplitude signal represents a binary 0, while a high amplitude signal represents a binary 1. |
| **BIOS** | The Basic Input/Output System (BIOS) is firmware that is first run when the computer is turned on and can be configured by the end user |
| **CODEC** | The Compressor-Decompressor (CODEC) encodes and decodes digital audio data on the system. |
| **CompactFlash®** | CompactFlash® is a solid-state storage device. CompactFlash® devices use flash memory in a standard size enclosure. Type II is thicker than Type I, but a Type II slot can support both types. |
| **CMOS** | Complimentary metal-oxide-conductor is an integrated circuit used in chips like static RAM and microprocessors. |
| **COM** | COM refers to serial ports. Serial ports offer serial communication to expansion devices. The serial port on a personal computer is usually a male DB-9 connector. |
| **DAC** | The Digital-to-Analog Converter (DAC) converts digital signals to analog signals. |
| **DDR** | Double Data Rate refers to a data bus transferring data on both the rising and falling edges of the clock signal. |

| | |
|---|---|
| **DMA** | Direct Memory Access (DMA) enables some peripheral devices to bypass the system processor and communicate directly with the system memory. |
| **DIMM** | Dual Inline Memory Modules are a type of RAM that offer a 64-bit data bus and have separate electrical contacts on each side of the module. |
| **DIO** | The digital inputs and digital outputs are general control signals that control the on/off circuit of external devices or TTL devices. Data can be read or written to the selected address to enable the DIO functions. |
| **EHCI** | The Enhanced Host Controller Interface (EHCI) specification is a register-level interface description for USB 2.0 Host Controllers. |
| **EIDE** | Enhanced IDE (EIDE) is a newer IDE interface standard that has data transfer rates between 4.0 MB/s and 16.6 MB/s. |
| **EIST** | Enhanced Intel® SpeedStep Technology (EIST) allows users to modify the power consumption levels and processor performance through application software. The application software changes the bus-to-core frequency ratio and the processor core voltage. |
| **FSB** | The Front Side Bus (FSB) is the bi-directional communication channel between the processor and the Northbridge chipset. |
| **GbE** | Gigabit Ethernet (GbE) is an Ethernet version that transfers data at 1.0 Gb/s and complies with the IEEE 802.3-2005 standard. |
| **GPIO** | General purpose input |
| **HDD** | Hard disk drive (HDD) is a type of magnetic, non-volatile computer storage device that stores digitally encoded data. |
| **ICH** | The Input/Ouput Control Hub (ICH) is an Intel® Southbridge chipset. |
| **IrDA** | Infrared Data Association (IrDA) specifies infrared data transmission protocols used to enable electronic devices to wirelessly communicate with each other. |
| **L1 Cache** | The Level 1 Cache (L1 Cache) is a small memory cache built into the system processor. |
| **L2 Cache** | The Level 2 Cache (L2 Cache) is an external processor memory cache. |

| | |
|---|---|
| **LCD** | Liquid crystal display (LCD) is a flat, low-power display device that consists of two polarizing plates with a liquid crystal panel in between. |
| **LVDS** | Low-voltage differential signaling (LVDS) is a dual-wire, high-speed differential electrical signaling system commonly used to connect LCD displays to a computer. |
| **POST** | The Power-on Self Test (POST) is the pre-boot actions the system performs when the system is turned-on. |
| **RAM** | Random Access Memory (RAM) is volatile memory that loses data when power is lost. RAM has very fast data transfer rates compared to other storage like hard drives. |
| **SATA** | Serial ATA (SATA) is a serial communications bus designed for data transfers between storage devices and the computer chipsets. The SATA bus has transfer speeds up to 1.5 Gb/s and the SATA II bus has data transfer speeds of up to 3.0 Gb/s. |
| **S.M.A.R.T** | Self Monitoring Analysis and Reporting Technology (S.M.A.R.T) refers to automatic status checking technology implemented on hard disk drives. |
| **UART** | Universal Asynchronous Receiver-transmitter (UART) is responsible for asynchronous communications on the system and manages the system's serial communication (COM) ports. |
| **UHCI** | The Universal Host Controller Interface (UHCI) specification is a register-level interface description for USB 1.1 Host Controllers. |
| **USB** | The Universal Serial Bus (USB) is an external bus standard for interfacing devices. USB 1.1 supports 12 Mb/s data transfer rates and USB 2.0 supports 480 Mb/s data transfer rates. |
| **VGA** | The Video Graphics Array (VGA) is a graphics display system developed by IBM. |

Appendix

C

# Watchdog Timer

**NOTE:**

The following discussion applies to DOS environment. IEI support is contacted or the IEI website visited for specific drivers for more sophisticated operating systems, e.g., Windows and Linux.

The Watchdog Timer is provided to ensure that standalone systems can always recover from catastrophic conditions that cause the CPU to crash. This condition may have occurred by external EMIs or a software bug. When the CPU stops working correctly, Watchdog Timer either performs a hardware reset (cold boot) or a Non-Maskable Interrupt (NMI) to bring the system back to a known state.

A BIOS function call (INT 15H) is used to control the Watchdog Timer.

INT 15H:

| **AH – 6FH Sub-function:** | |
|---|---|
| AL – 2: | Sets the Watchdog Timer's period. |
| BL: | Time-out value (Its unit-second is dependent on the item "Watchdog Timer unit select" in CMOS setup). |

**Table C-1: AH-6FH Sub-function**

Call sub-function 2 to set the time-out period of Watchdog Timer first. If the time-out value is not zero, the Watchdog Timer starts counting down. When the timer value reaches zero, the system resets. To ensure that this reset condition does not occur; calling sub-function 2 must periodically refresh the Watchdog Timer. However, the watchdog timer is disabled if the time-out value is set to zero.

A tolerance of at least 10% must be maintained to avoid unknown routines within the operating system (DOS), such as disk I/O that can be very time-consuming.

**NOTE:**

When exiting a program it is necessary to disable the Watchdog Timer, otherwise the system resets.

## EXAMPLE PROGRAM:

```
; INITIAL TIMER PERIOD COUNTER

;
W_LOOP:
;

        MOV     AX, 6F02H       ;setting the time-out value
        MOV     BL, 30          ;time-out value is 48 seconds
        INT     15H

;
; ADD THE APPLICATION PROGRAM HERE
;

        CMP     EXIT_AP, 1      ;is the application over?
        JNE     W_LOOP          ;No, restart the application

        MOV     AX, 6F02H       ;disable Watchdog Timer
        MOV     BL, 0           ;
        INT     15H

;
; EXIT ;
```

Appendix

D

# Hazardous Materials Disclosure

## D.1 Hazardous Materials Disclosure Table for IPB Products Certified as RoHS Compliant Under 2002/95/EC Without Mercury

The details provided in this appendix are to ensure that the product is compliant with the Peoples Republic of China (China) RoHS standards. The table below acknowledges the presences of small quantities of certain materials in the product, and is applicable to China RoHS only.

A label will be placed on each product to indicate the estimated “Environmentally Friendly Use Period” (EFUP). This is an estimate of the number of years that these substances would “not leak out or undergo abrupt change.” This product may contain replaceable sub-assemblies/components which have a shorter EFUP such as batteries and lamps. These components will be separately marked.

Please refer to the table on the next page.

| Part Name | Toxic or Hazardous Substances and Elements | | | | | |
|---|---|---|---|---|---|---|
| | Lead (Pb) | Mercury (Hg) | Cadmium (Cd) | Hexavalent Chromium (CR(VI)) | Polybrominated Biphenyls (PBB) | Polybrominated Diphenyl Ethers (PBDE) |
| **Housing** | X | O | O | O | O | X |
| **Display** | X | O | O | O | O | X |
| **Printed Circuit Board** | X | O | O | O | O | X |
| **Metal Fasteners** | X | O | O | O | O | O |
| **Cable Assembly** | X | O | O | O | O | X |
| **Fan Assembly** | X | O | O | O | O | X |
| **Power Supply Assemblies** | X | O | O | O | O | X |
| **Battery** | O | O | O | O | O | O |

O: This toxic or hazardous substance is contained in all of the homogeneous materials for the part is below the limit requirement in SJ/T11363-2006

X: This toxic or hazardous substance is contained in at least one of the homogeneous materials for this part is above the limit requirement in SJ/T11363-2006

此附件旨在确保本产品符合中国 RoHS 标准。以下表格标示此产品中某有毒物质的含量符合中国 RoHS 标准规定的限量要求。

本产品上会附有"环境友好使用期限"的标签，此期限是估算这些物质"不会有泄漏或突变"的年限。本产品可能包含有较短的环境友好使用期限的可替换元件，像是电池或灯管，这些元件将会单独标示出来。

| 部件名称 | 有毒有害物质或元素 | | | | | |
|---|---|---|---|---|---|---|
| | 铅<br>(Pb) | 汞<br>(Hg) | 镉<br>(Cd) | 六价铬<br>(CR(VI)) | 多溴联苯<br>(PBB) | 多溴二苯醚<br>(PBDE) |
| 壳体 | X | O | O | O | O | X |
| 显示 | X | O | O | O | O | X |
| 印刷电路板 | X | O | O | O | O | X |
| 金属螺帽 | X | O | O | O | O | O |
| 电缆组装 | X | O | O | O | O | X |
| 风扇组装 | X | O | O | O | O | X |
| 电力供应组装 | X | O | O | O | O | X |
| 电池 | O | O | O | O | O | O |
| O: 表示该有毒有害物质在该部件所有物质材料中的含量均在 SJ/T11363-2006 标准规定的限量要求以下。<br>X: 表示该有毒有害物质至少在该部件的某一均质材料中的含量超出 SJ/T11363-2006 标准规定的限量要求。 | | | | | | |