PCI-TMC12(A)

User Manual

Version 2.5
February 2011

Warranty

All products manufactured by ICP DAS are warranted against defective materials for a period of one year from the date of delivery to the original purchaser.

Warning

ICP DAS assumes no liability for damages consequent to the use of this product. ICP DAS reserves the right to change this manual at any time without notice. The information furnished by ICP DAS is believed to be accurate and reliable. However, no responsibility is assumed by ICP DAS for its use, nor for any infringements of patents or other rights of third parties resulting from its use.

Copyright

Trademark

Names are used for identification only and may be registered trademarks of their respective companies.

Tables of Contents

1. Introduction

The PCI-TMC12(A) is a general purpose timer/counter card that supports the 5 V PCI bus and “Plug & Play” functionality to automatically obtain I/O resources from the BIOS. This card contains twelve 16-bit timers/counters (four 82C54 chips x 3 timers/counters), 16 TTL digital input channels and 16 TTL digital output channels. The two onboard clocks (8 M/1.6 M and 0.8 M/80 K) are jumper selectable and provide a high-resolution clock source for timers/counters. Counters/timers can be used for industrial and laboratory applications such as pulse/event/switch-toggle counting, frequency readings, elapsed time measurement, pulse-width measurement, PWM (pulse-width-modulated) output, and pulse (square wave) and rate generation, etc.

The PCI-TMC12(A) supports various OS versions, such as Linux, DOS, Windows 98/NT/2000 and 32/64-bit Windows 7/Vista/XP. DLL and Active X control together with various language sample programs based on Turbo C++, Borland C++, Microsoft C++, Visual C++, Borland Delphi, Borland C++ Builder, Visual Basic, C#.NET, Visual Basic.NET and LabVIEW are provided in order to help users quickly and easily develop their own applications.

Note: **PCI-TMC12(A)** = PCI-TMC12 or PCI-TMC12A

1.1 Features

- The PCI-TMC12(A) is a general purpose counter/timer and digital I/O card
- 4 onboard 8254 timer/counter chips
- 12 independent 16-bit timers/counters
- 12 external clock inputs
- 12 external gate control inputs
- 12 timer/counter output channels
- 16-bit timer/counter can be cascaded to create 32/48-bit timer/counter
- Gate input can be either an external signal or the output of a previous timer/counter channel
- Four interrupt sources
- Two internal clock sources
- 16-TTL D/I channels and 16 TTL D/O channels
- More flexible interrupt mechanism
- Hardware mechanism for the generation of two starting-clocks

Note: **PCI-TMC12(A)** = PCI-TMC12 or PCI-TMC12A

1.2 Specifications

Model Name	PCI-TMC12A
Digital Input	
Channels	16
Compatibility	5 V/TTL
Input Voltage	Logic 0: 0.8 V max. Logic 1: 2.0 V min.
Response Speed	2.0 MHz (Typical)
Digital Output	
Channels	16
Compatibility	5 V/TTL
Output Voltage	Logic 0: 0.4 V max. Logic 1: 2.4 V min.
Output Capability	Sink: 24 mA @ 0.8 V Source: 15 mA @ 2.0 V
Response Speed	2.0 MHz (Typical)
Timer/Counter	
Channels	12 (Independent x 12)
Resolution	16-bit
Compatibility	5 V/TTL
Input Frequency	10 MHz max.
Reference Clock	Internal: 8 MHz
General	
Bus Type	5 V PCI, 32-bit, 33 MHz
Data Bus	16-bit
Card ID	No
I/O Connector	Female DB37 x 1 20-pin box header x 2
Dimensions (L x W x D)	150 mm x 105 mm x 22 mm
Power Consumption	500 mA @ +5 V
Operating Temperature	0 ~ 60 °C
Storage Temperature	-20 ~ 70 °C
Humidity	5 ~ 85% RH, non-condensing

1.3 Product Check List

The shipping package includes the following items:

- One PCI-TMC12/TMC12A series card
- One software utility PCI CD.
- One Quick Start Guide

It is recommended that you read the Quick Start Guide first. All the necessary and essential information is given in the Quick Start Guide, including:

- Where to get the software driver, demo programs and other resources.
- How to install the software.
- How to test the card.

Attention!

If any of these items is missing or damaged, contact the dealer from whom you purchased the product. Please save the shipping materials and carton in case you need to ship or store the product in the future.

2. Hardware Configuration

2.1 Board Layout

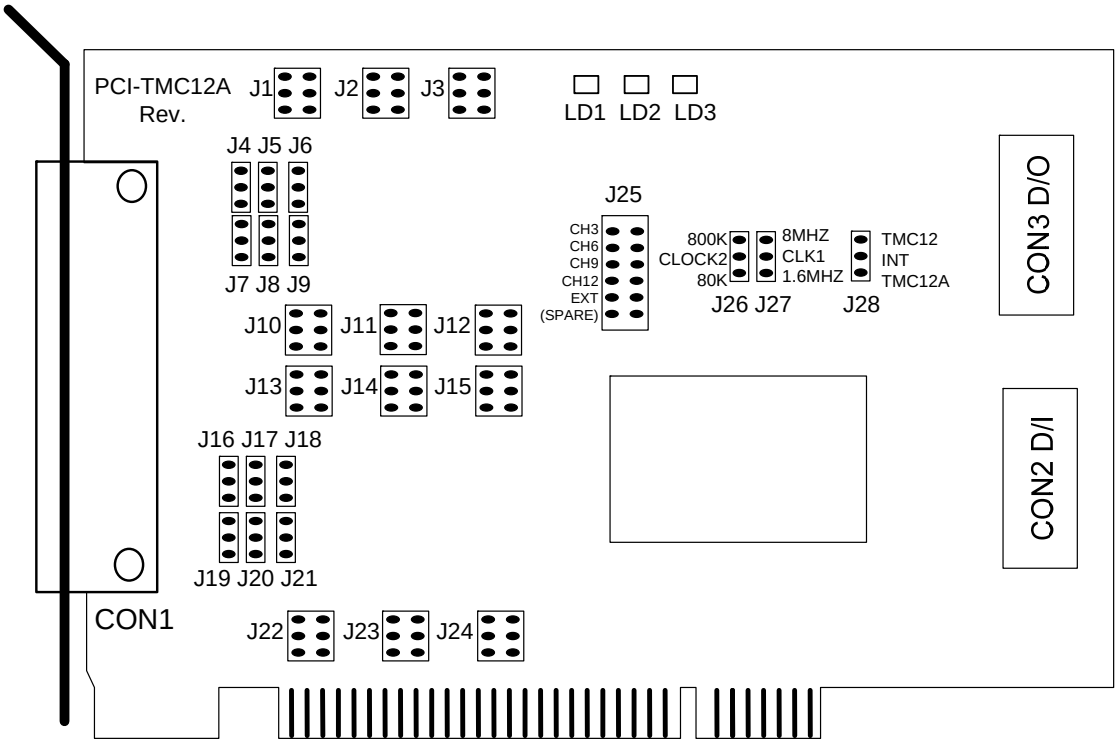

Note: **J28, LD1, LD2 and LD3** are designed for PCI-TMC12A only.

2.2 Counter Architecture

There are four 8254 chips on the PCI-TMC12(A) card. The block diagram is given as following:

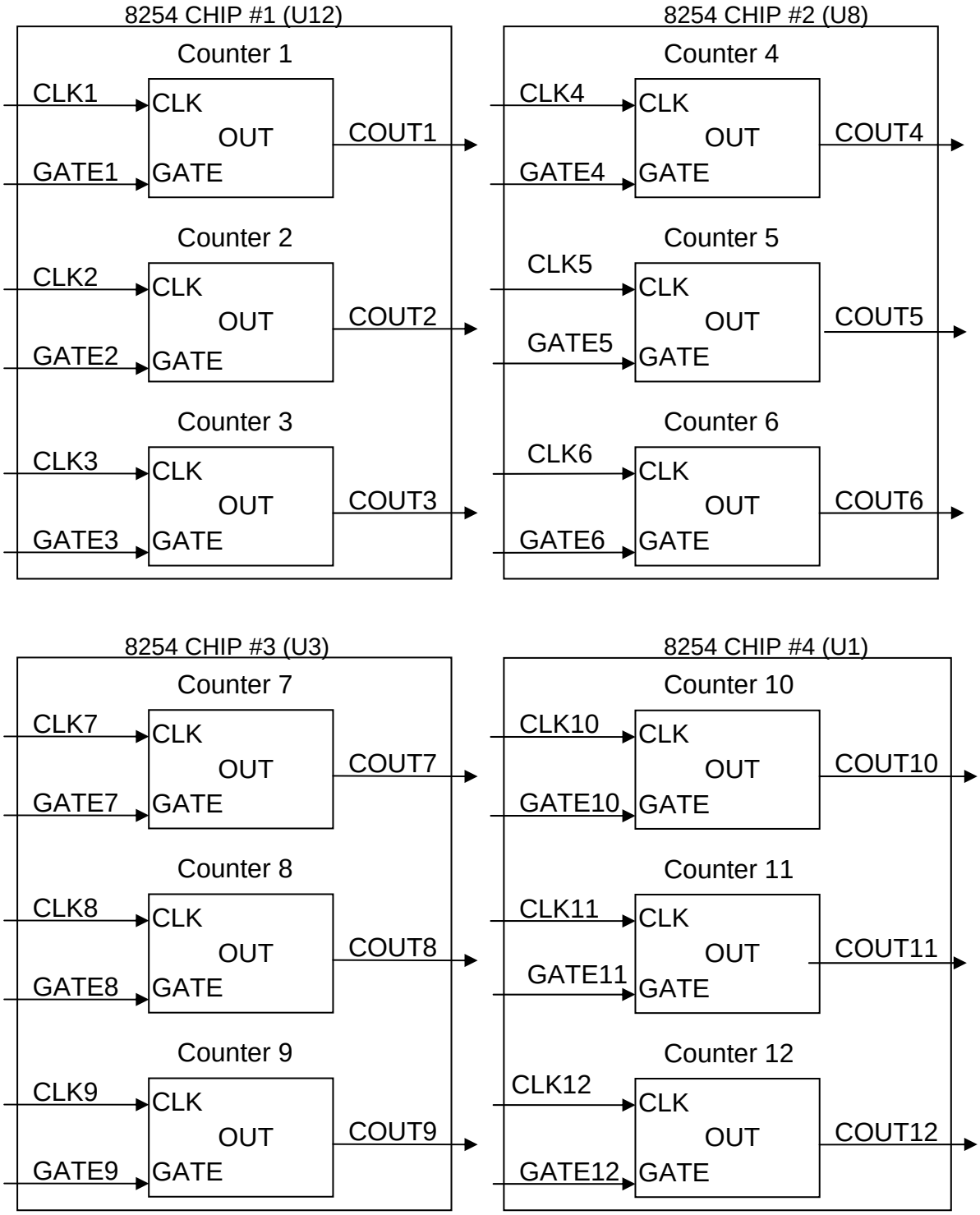

2.3 DI/DO Block Diagram

The PCI-TMC12(A) provide 16-channel digital input and 16-channel digital output. All levels are TTL compatible. The connections diagram and block diagram are given as following:

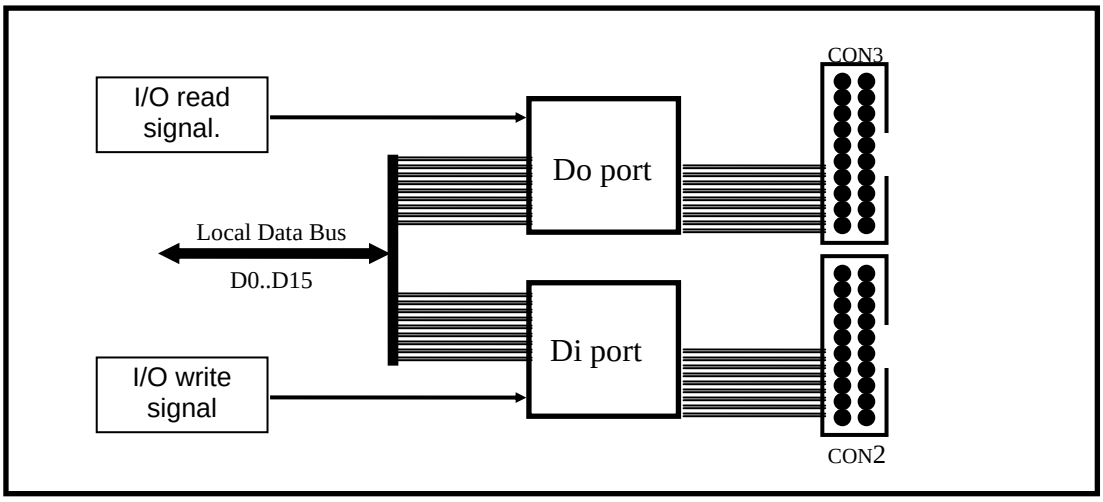

The D/I port can be connected to the DB-16P. The DB-16P is a 16-channel isolated digital input daughter board. The D/O port can be connected to the DB-16R or DB-24PR. The DB-16R is a 16-channel relay output board. The DB-24R is a 24-channel power relay output board.

2.4 Jumper Setting

2.4.1 J28: PCI-TMC12 and PCI-TMC12A

- All old program designed for PCI-TMC12 can be executed on PCI-TMC12A without any modification
- The PCI-TMC12A provides more features; refer to Sec. 3.4 for more information.

Figure 2.1: J28 statuses

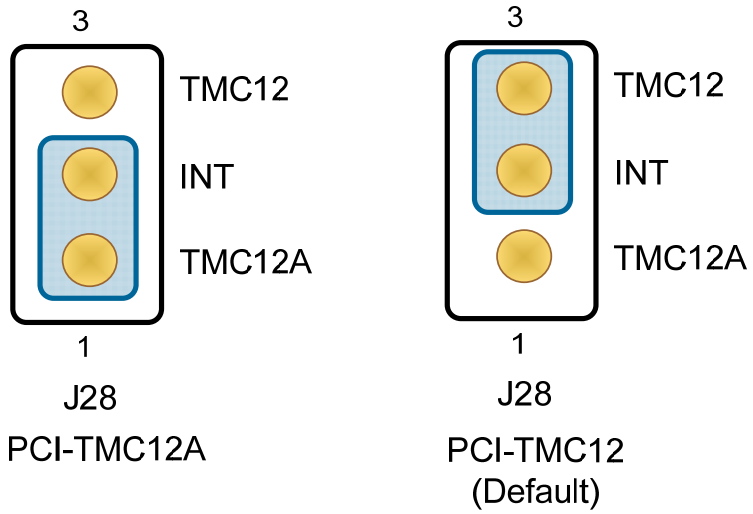

2.4.2 J26, J27: CLOCK1 and CLOCK2 Selection

There are two stable internal clock sources in PCI-TMC12(A) which named as ***CLOCK1 & CLOCK2.*** The ***CLOCK1*** may be 8 M or 1.6 M selectable by **J27**. The ***CLOCK2*** may be 0.8 M or 80 k selected by **J26**. The block diagram of internal clock sources is given as following:

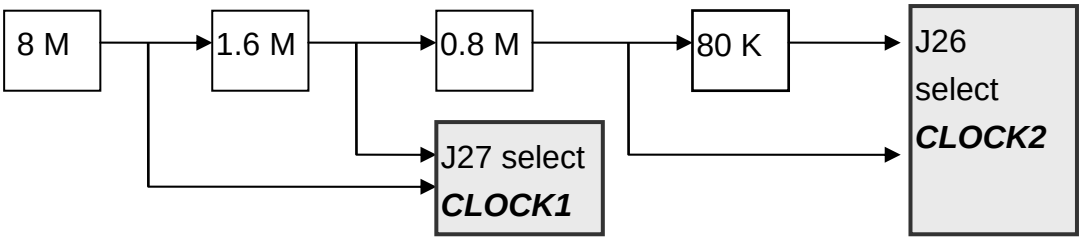

Figure 2.2: J27 statuses

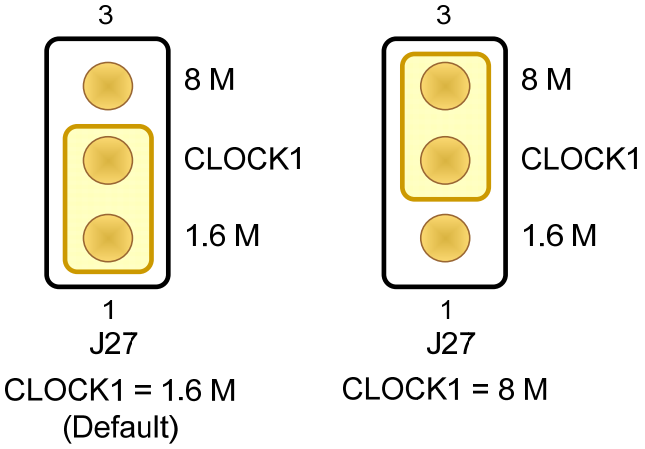

Figure 2.3: J26 statuses

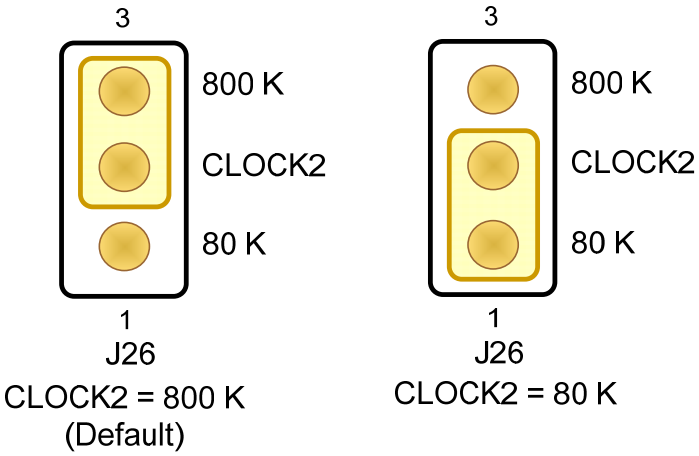

2.4.3 J1~J3, J10~J12, J13~J15, J22~J24: CLK1 to CLK12 Selection

1: select CLOCK1
2: select CLOCK2
5: select COUTn-1
6: select external CLKn from CN1

Figure 2.4: J1~J3、J10~J12、J13~J15 and J22~J24 statuses

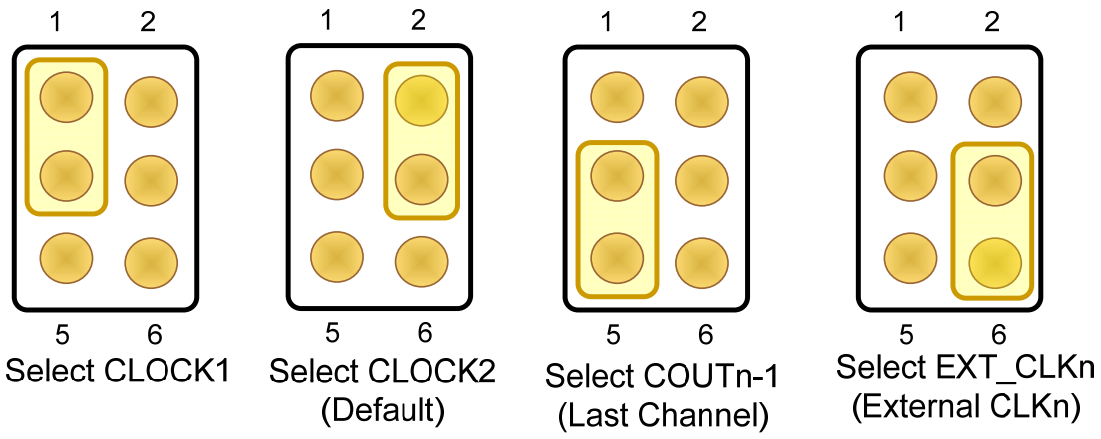

CLK1~12	Jumper	Select Sources
CLK1	J22	CLOCK1, CLOCK2, COUT6, ECLK1
CLK2	J23	CLOCK1, CLOCK2, COUT1, ECLK2
CLK3	J24	CLOCK1, CLOCK2, COUT2, ECLK3
CLK4	J13	CLOCK1, CLOCK2, COUT3, ECLK4
CLK5	J14	CLOCK1, CLOCK2, COUT4, ECLK5
CLK6	J15	CLOCK1, CLOCK2, COUT5, ECLK6
CLK7	J10	CLOCK1, CLOCK2, COUT12, ECLK7
CLK8	J11	CLOCK1, CLOCK2, COUT7, ECLK8
CLK9	J12	CLOCK1, CLOCK2, COUT8, ECLK9
CLK10	J1	CLOCK1, CLOCK2, COUT9, ECLK10
CLK11	J2	CLOCK1, CLOCK2, COUT10, ECLK11
CLK12	J3	CLOCK1, CLOCK2, COUT11, ECLK12

2.4.4 J4~J6, J7~J9, J16~J18, J19~J21: GATE1 to GATE12 Selection

Figure 2.5: J16~J18 and J19~J21 statuses

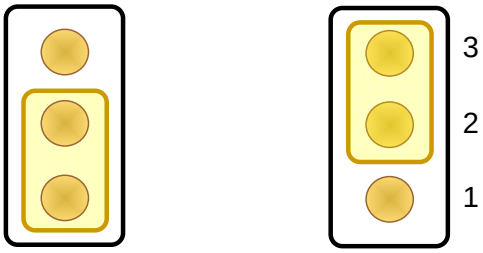

GATEn = EXTGn (Default) GATEn = Inverted COUTn-1

GATE	Jumper	Select source
GATE1	J19	Inverted COUT6, EXTG1
GATE2	J20	Inverted COUT1, EXTG2
GATE3	J21	Inverted COUT2, EXTG3
GATE4	J16	Inverted COUT3, EXTG4
GATE5	J17	Inverted COUT4, EXTG5
GETE6	J18	Inverted COUT5, EXTG6

Figure 2.6: J4~J6 and J7~J9 statuses

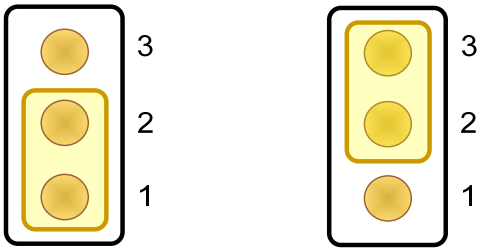

GATEn = EXTGn (Default) GATEn = COUTn-1

GATE	Jumper	Select source
GATE7	J7	COUT12, EXTG7
GATE8	J8	COUT7, EXTG8
GATE9	J9	COUT8, EXTG9
GATE10	J4	COUT9, EXTG10
GATE11	J5	COUT10, EXTG11
GETE12	J6	COUT11, EXTG12

2.4.5 J25: Interrupt Source Selection

There are five signals can be used as interrupt sources: CH3, CH6, CH9, CH12 and EXT as following:

CH3: comes from COUT3, output of counter 3

CH6: comes from COUT6, output of counter 6

CH9: comes from COUT9, output of counter 9

CH12: comes from COUT12, output of counter 12

EXT: comes from ECLK11, external CLK for counter 11, from CN1.

(SPARE): no interrupt source

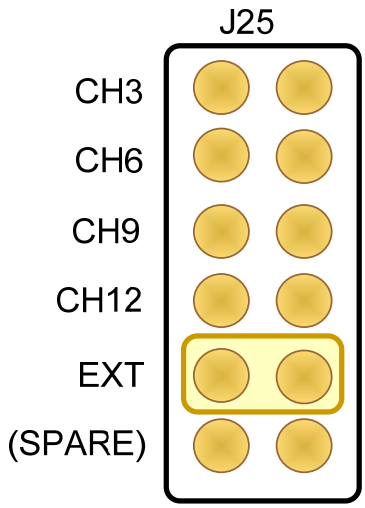

Interrupt source = ECLK11

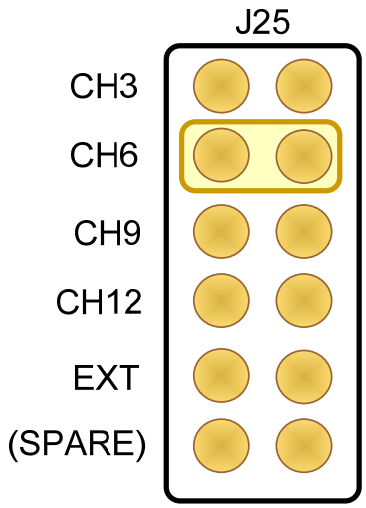

Interrupt source = COUT6

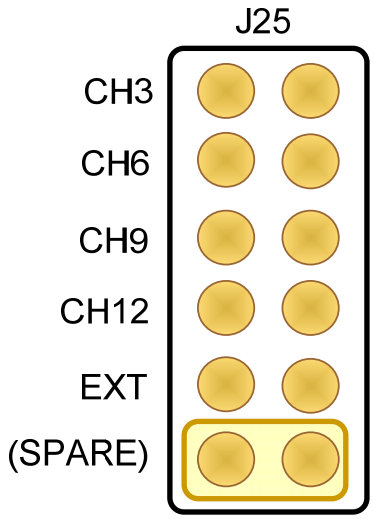

No interrupt source
(Defual)

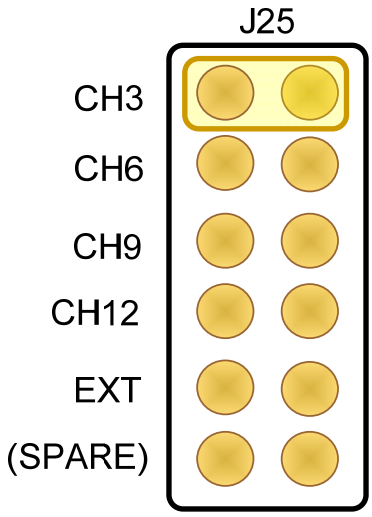

Interrupt source = COUT3

2.5 Pin Assignment

CON1: 37 pin D-type female connector.

CON2: 20 pin box header of the digital input connector.

CON3: 20 pin box header of the digital output connector.

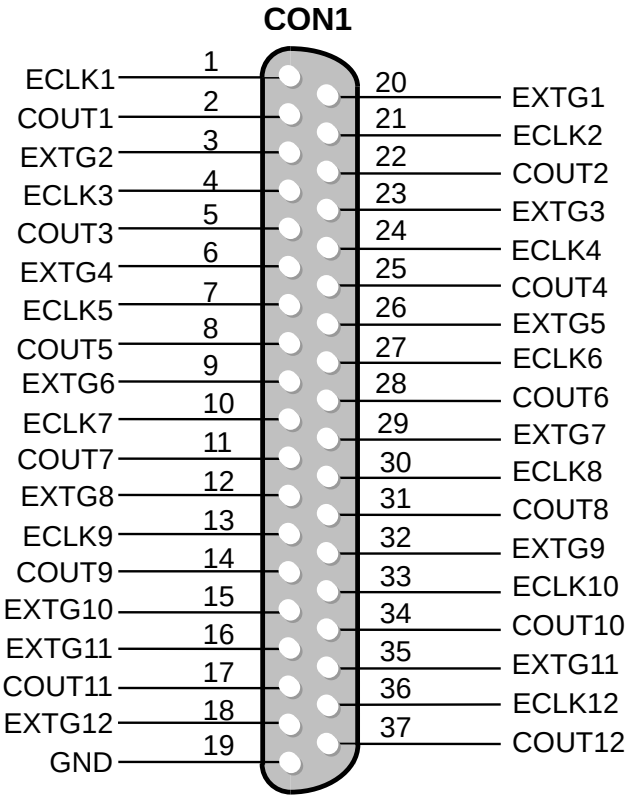

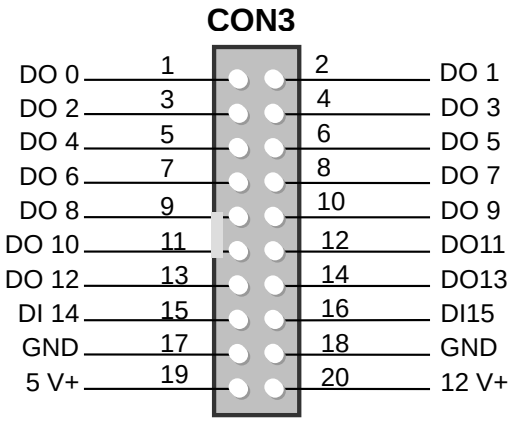

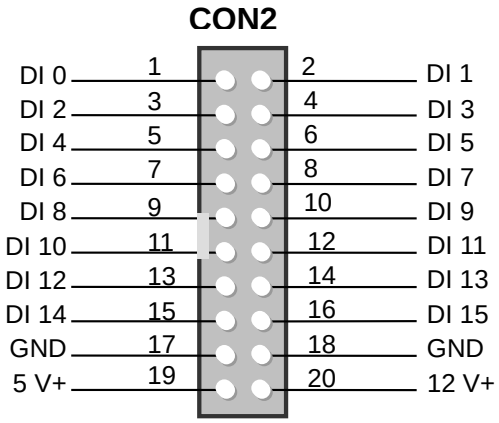

All signals are TTL Compatible	
High (1)	2.0 ~ 5.0 V(Voltage over 5.0V will damage the device)
None Define	2.0 V ~ 0.8 V
Low(0)	Under 0.8 V

■ The CON1 is a 37 pin D-type female connector.

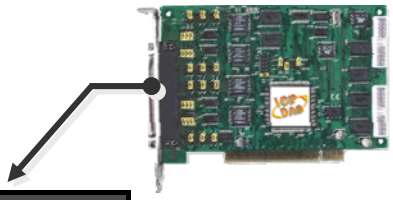

Pin Number	Description	Pin Number	Description
1	ECLK1	20	EXTG1
2	COUT1	21	ECLK2
3	EXTG2	22	COUT2
4	ECLK3	23	EXTG3
5	COUT3	24	ECLK4
6	EXTG4	25	COUT4
7	ECLK5	26	EXTG5
8	COUT5	27	ECLK6
9	EXTG6	28	COUT6
10	ECLK7	29	EXTG7
11	COUT7	30	ECLK8
12	EXTG8	31	COUT8
13	ECLK9	32	EXTG9
14	COUT9	33	ECLK10
15	EXTG10	34	COUT10
16	ECLK11	35	EXTG11
17	COUT11	36	ECLK12
18	EXTG12	37	COUT12
19	GND	XXXXXXX	This pin not available

- ECLKn: external clock source for counter n
- EXTGn: external gate control signal for counter n
- COUTn: output of timer/counter n

■ CON3: pin assignment of the digital output connector.

Pin	Name	Pin	Name
1	Digital output 0	2	Digital output 1
3	Digital output 2	4	Digital output 3
5	Digital output 4	6	Digital output 5
17	Digital output 6	8	Digital output 7
9	Digital output 8	10	Digital output 9
11	Digital output 10	12	Digital output 11
13	Digital output 12	14	Digital output 13
15	Digital output 14	16	Digital output 15
17	PCB ground	18	PCB ground
19	PCB +5 V	20	PCB +12 V

■ CON2: pin assignment of digital input connector.

Pin	Name	Pin	Name
1	Digital input 0	2	Digital input 1
3	Digital input 2	4	Digital input 3
5	Digital input 4	6	Digital input 5
17	Digital input 6	8	Digital input 7
9	Digital input 8	10	Digital input 9
11	Digital input 10	12	Digital input 11
13	Digital input 12	14	Digital input 13
15	Digital input 14	16	Digital input 15
17	PCB ground	18	PCB ground
19	PCB +5 V	20	PCB +12 V

2.6 Daughter Boards

2.6.1 DB-37

The DB-37 is a general-purpose daughter board for D-sub 37 pins devices, and is designed for easy wiring.

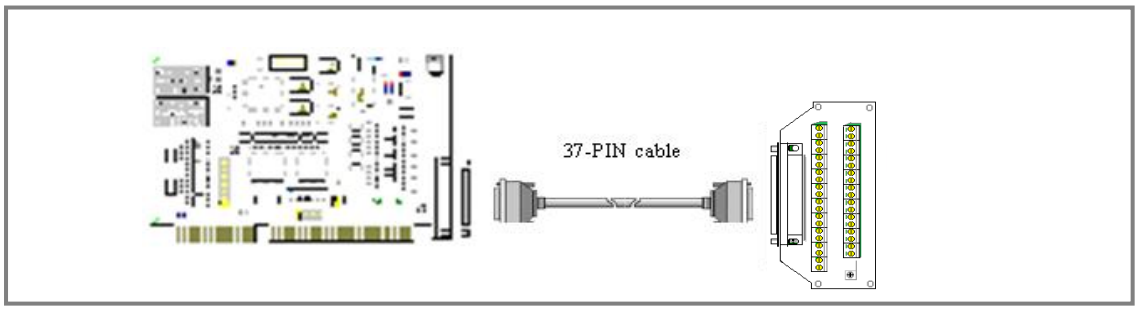

2.6.2 DN-37 and DN-20

The DN-37 is a general-purpose daughter board for DB-37. The DN-20 is designed for 20-pin flat-cable. They are designed for easy wiring. They are Din-Rail mounting.

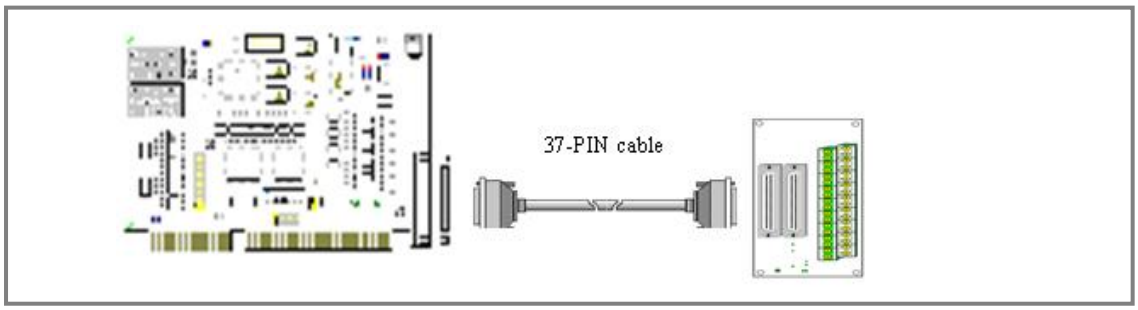

2.6.3 DB-8125 and DB-8025

The DB-8125 is a general-purpose screw terminal board and is designed for easy wiring. There are one DB-37 and two 20-pin flat-cable headers in the DB-8125. The DB-8025 is designed for 20-pin flat-cable header.

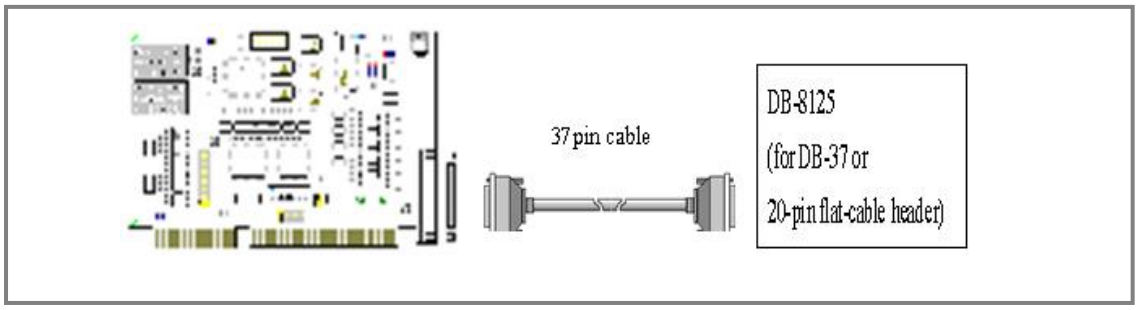

2.6.4 DB-16P Isolated Input Board

The DB-16P is a 16-channel isolated digital input daughter board with optically isolated inputs that consist of a bi-directional opto-coupler with a resistor to allow current sensing. The DB-16P can be used to sense DC signal from TTL levels up to 24 V or use sense a wide range of AC signals. This board can also be used to isolate the host computer from large common-mode voltage, ground loops and transient voltage spike that often occur in industrial environments.

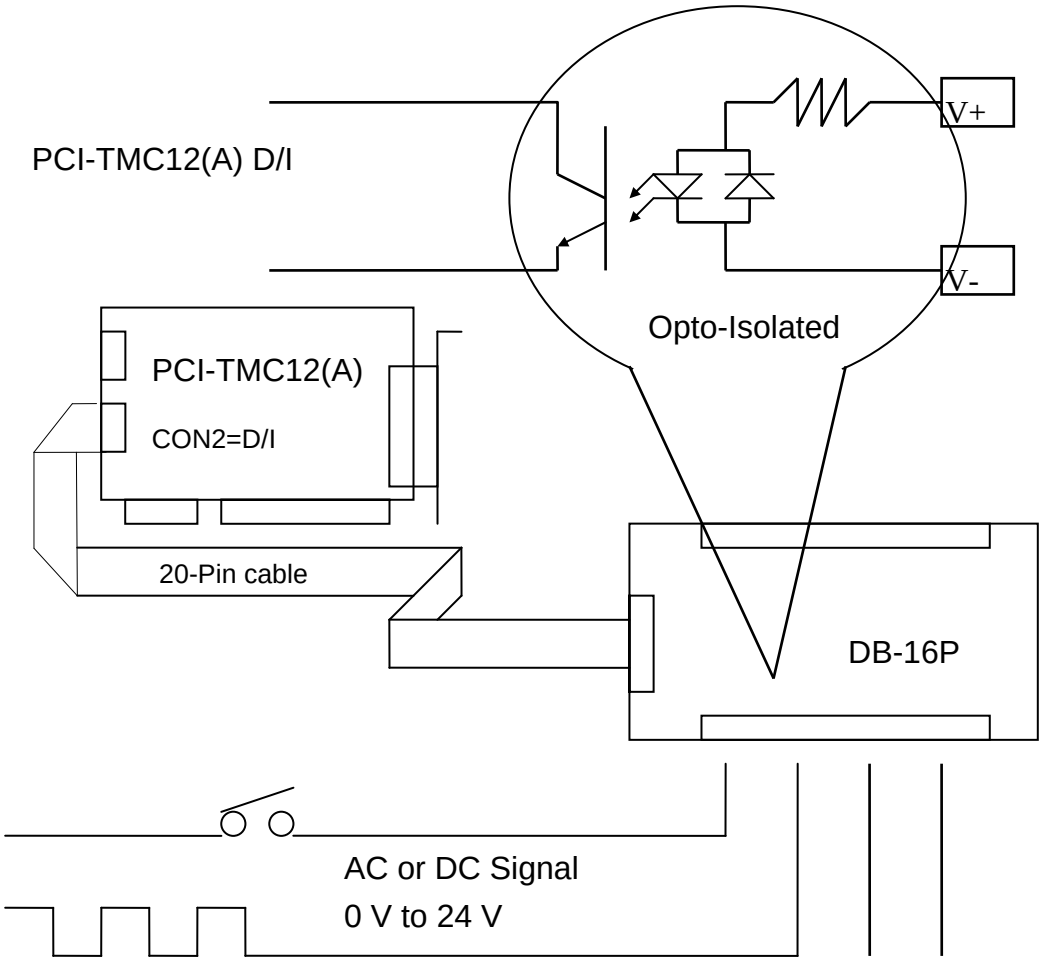

2.6.5 DB-16R Relay Board

The DB-16R is a 16-channel relay output board that consists of 16 Form C relays that enable efficient switching of load through a programmable control. The connectors and functionally is compatible with 785 series board, but contains an industrial-type terminal block. The relays are powered by applying a 5 voltage signal to the appropriated relay channel via the 20-pin flat cable connector. There are 16 LEDs, one for each relay, which are illuminated when their associated relay is activated. To avoid overloading the power supply of your PC, this board includes a screw terminal to allow an external power supply to be connected.

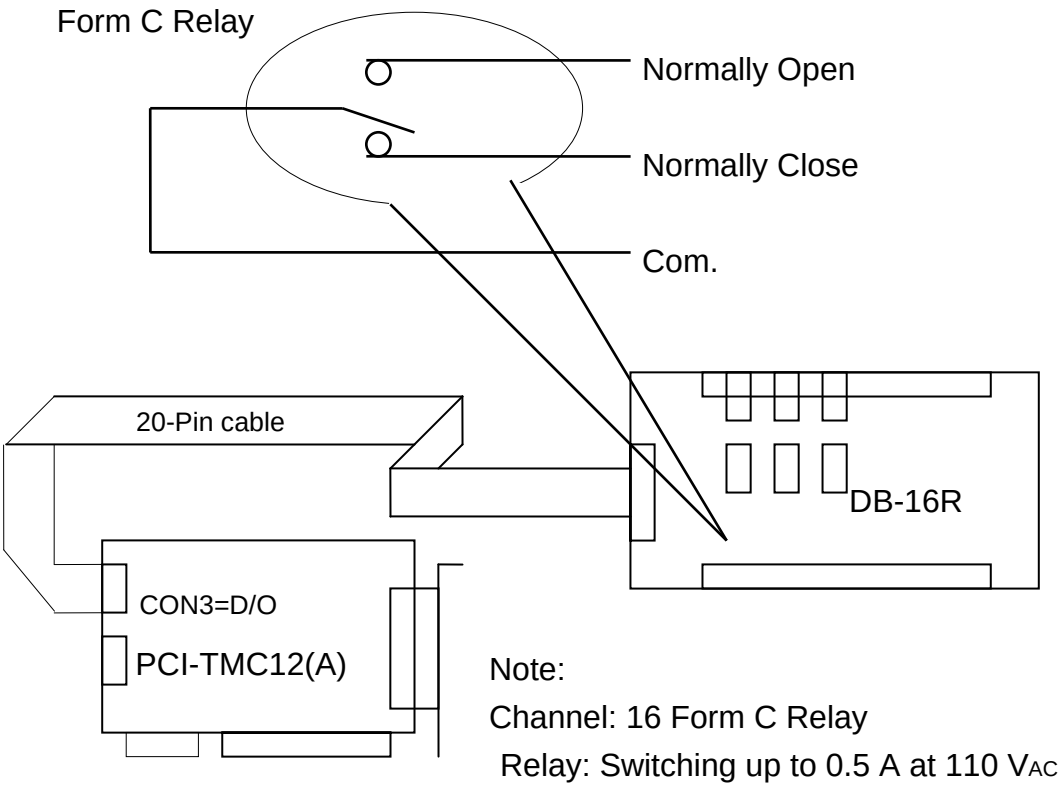

Note:
Channel: 16 Form C Relay
Relay: Switching up to 0.5 A at 110 V_{AC} or 1 A at 24 V_{DC}

2.6.6 DB-24PR, DB-24POR, DB-24C

DB-24PR	24 x power relays, 5 A/250 V
DB-24POR	24 x PhotoMOS relays, 0.1 A/350 V_{AC}
DB-24C	24 x open collectors, 100 mA per channel, 30 V max.

The DB-24PR is a 24-channel power relay output board that consists of 8 Form C and 16 Form A electromechanical relays that enable efficient switching of loads though a programmed control. The contact of each relay can control a 5 A load at 250 V_{AC}/30V_{DC}. The relay is powered by applying a 5 V signal to the appropriate relay channel via the 20-pin flat cable connector, which only uses 16 relays or 50-pin flat cable connector. (OPTO-22 compatible, for DIO-24 series). Twenty are 24 LEDs, one for each relay, which are illuminated when their associated relay is activated. To avoid overloading the power supply of your PC, this board requires a +12 V_{DC} or +24 V_{DC} external power supply.

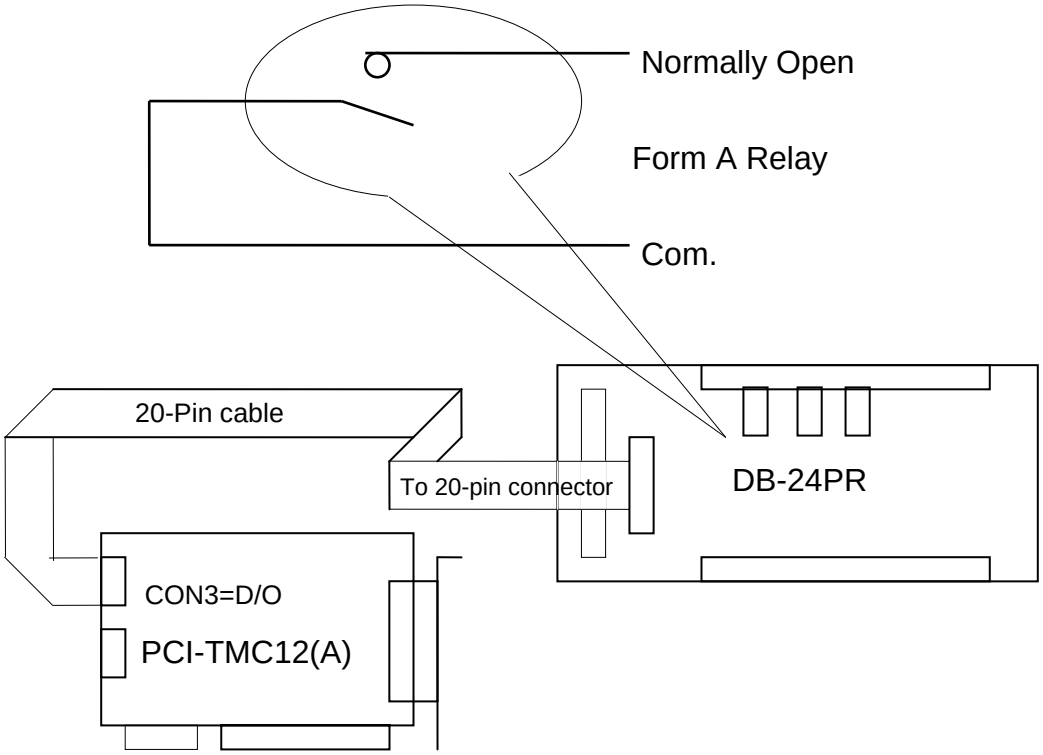

Note:

1. **50-Pin connector (OPTO-22 compatible), for DIO-24, DIO-48, DIO-144, PIO-D144, PIO-D96, PIO-D56, PIO-D48, PIO-D24**
2. **20-Pin connector for 16 channel digital output, A-82x, A-62x, DIO-64, ISO-DA16/DA8, PIO-D56, PIO-DA4/8/16**
3. **Channel: 16 Form A Relay , 8 Form C Relay**
4. **Relay: Switching up to 5 A at 110 V_{AC}/5 A at 30 V_{DC}**

3. I/O Control Register

3.1 How to Find the I/O Address

The Plug & Play BIOS will assign an appropriate I/O address for each PCI-TMC12(A) cards during the power-on stage. The fixed Ids for the PCI-TMC12(A) cards as following:

	PCI-TMC12	PCI-TMC12A
Vendor ID	0x10B5	
Device ID	0x9050	
Sub Vendor ID	0x2129	
Sub Device ID	0x9912	

We provide all necessary functions as following:

1. PTMC12_DriverInit(&wBoard)

This function can detect how many PCI-TMC12(A) cards in the system. It is implemented based on the PCI Plug & Play mechanism-1. It will find all PCI-TMC12(A) cards installed in this system & save all their resource in the library.

- wBoard=1 : only one PCI-TMC12(A) in this PC system.
- wBoard=2 : there are two PCI-TMC12(A) in this PC system.

2. PTMC12_GetConfigAddressSpace(wBoardNo,*wBase,*wIrq,*wPLX)

The user can use this function to save resource of all PCI-TMC12(A) installed in this system. Then the application program can control all functions of PCI-TMC12(A) directly.

- wBoardNo=0 to N : totally N+1 cards of PCI-TMC12(A)
- wBase : base address of the board control word
- wIrq : allocated IRQ channel number of this board
- wPLX : base address of PCI-interface-IC

■ The sample program source is given as following:

```
/* step1: detect all PCI-TMC12(A) card first */
wRetVal=PTMC12_DriverInit(&wBoards);
printf("Threr are %d PCI-TMC12 Cards in this PC\n",wBoards);

/* step2: save resource of all PCI-TMC12(A) cards installed in this PC */
for (i=0; i<wBoards; i++)
  {
  PTMC12_GetConfigAddressSpace(i,&wBase,&wIrq,&wPLX);
  printf("\nCard_%d: wBase=%x, wIrq=%x, wPLX=%x", i,wBase,wIrq,wPLX);
 wConfigSpace[i][0]=wBaseAddress;      /* save all resource of this card */
 wConfigSpace[i][1]=wIrq;              /* save all resource of this card */
 wConfigSpace[i][2]=wPLX;              /* save all resource of this card */
  }

/* step3: control the PCI-TMC12(A) directly */
wBase=wConfigSpace[0][0];              /* get base address the card_0  */
outport(wBase+0x14,wDoValue);         /* control the D/O states of card_0  */
wDiValue=inport(wBase+0x14);          /* read the D/I states of card_0 */

wBase=wConfigSpace[1][0];             /* get base address of card_1   */
outport(wBase+0x14,wDoValue);        /* control the D/O states of card_1  */
wDiValue=inport(wBase+0x14);         /* read the D/I states of card_1  */

wPLX=wConfigSpace[2][2];      /* get PCI-interface base address of card-2  */
_outpd(wPLX+0x4c,0x41);              /* channel_1, interrupt active_Low  */
..
..
_outpd(wPLX+0x4c,0);                 /* disable all interrupt  */
```

The **PIO_PISO.EXE utility program** can be used to detect and display the details of PCI-TMC12(A) card installed in this PC. Refer to Sec. 6.3 for more information.

3.2 The Assignment of I/O Address

The Plug & Play BIOS will assign an appropriate I/O address to PCI-TMC12(A) card. If there is only one PCI-TMC12(A), the board will be identified as card_0. However, if there are two or more PCI-TMC12(A) cards in the system, identifying which board is card_0 becomes more difficult. The software driver can support a maximum of 16 boards.

The simplest way to find the card number is to use DEM10.EXE (CD:\NAPDOS\PCI\PCI-TMC12A\DOS\) **given in DOS demo program**. This demo program will send a value to D/O and read back from D/I. If the users install a 20-pin flat cable between CON2 and CON3, the value read from D/I will be the same as D/O. The operation steps are given as following:

Step 1: Remove all 20-pin flat cable between CON2 and CON3

Step 2: Install all PCI-TMC12 cards into this PC system

Step 3: Power-on and run DEM10.EXE

Step 4: Check all D/I values on the screen, they should be different from D/O values.

Since there is no cable connected between the D/I and D/O connectors.

Step 5: Install a 20-pin flat cable into CON2 & CON3 of any PCI-TMC12 card

Step 6: Check which card has the same D/I and D/O value, and then record this board number. It is the board number of the card that is connected with the cable.

Therefore the user can find the card number very easy if he install a 20-pin flat cable into PCI-TMC12 one-by-one.

3.3 The I/O Address Map

The I/O address for PCI-TMC12(A) card is automatically assigned by the ROM BIOS of the PC and provides Plug & Play capabilities for PCI-TMC12(A) card.

The PCI-TMC12(A) I/O addresses are mapped as follows:

Address	Read	Write
wBase+0	Active 8254 Counter 0	Active 8254 Counter 0
wBase+4	Active 8254 Counter 1	Active 8254 Counter 1
wBase+8	Active 8254 Counter 2	Active 8254 Counter 2
wBase+0x0C	Active 8254 Control word	Active 8254 Control word
wBase+0x10	Reserved	Select the active 8254 chip
wBase+0x14	Digital input channel 0-15	Digital output channel 0-15
wBase+0x18	**New control of PCI-TMC12A**	**Interrupt clear of PCI-TMC12A**

Note: Refer to Sec. 3.1 for more information regarding wBase.

3.3.1 Activate a 8254 chip

There are four 8254 chips working simultaneously on PCI-TMC12(A) card, but only one 8254 chip can be activated for reading/writing at a time. Before accessing a 8254, use wBase+0x10 to set it as the active chip.

(Write) wBase+0x10: select the active 8254 chip

Bit 7	Bit 6	Bit 5	Bit 4	Bit 3	Bit 2	Bit 1	Bit 0
X	X	X	X	X	X	D1	D0

Note. Refer to Sec. 3.1 for more information about wBase.

D0=0, D1=0: 8254 chip-1 is active
D0=1, D1=0: 8254 chip-2 is active
D0=0, D1=1: 8254 chip-3 is active
D0=1, D1=1: 8254 chip-4 is active

```
outportb(wBase+0x10,0);   /* select the 8254 chip-1, CNT1 ~CNT3       */
outportb(wBase+0x10,2);   /* select the 8254 chip-3 , CNT10 ~ CNT12 */
```

3.3.2 8254 Timer/Counter Countrol

There are four 8254 chips working simultaneously on PCI-TMC12(A) card, but only one 8254 can be activated for reading/writing at a time. Before accessing an 8254, use wBase+0x10 to set it as the active chip. (Sec. 3.3.1)

The 8254 has 4 registers addressed from wBase+0 to wBase+0x0C, users can access the registers to control and monitor the Timer/Counter on the active 8254 chip. For more information, please refer to Chapter 4 and Intel 82C54 datasheet.

Address	Read	Write
wBase+0	Active 8254 Counter 0	Active 8254 Counter 0
wBase+4	Active 8254 Counter 1	Active 8254 Counter 1
wBase+8	Active 8254 Counter 2	Active 8254 Counter 2
wBase+0x0C	Active 8254 Control word	Active 8254 Control word

Note. Refer to Sec. 3.1 for more information about wBase.

3.3.3 Digital Input

(Read) wBase+0x14: read the digital input channel 0 to 15

Bit 7	Bit 6	Bit 5	Bit 4	Bit 3	Bit 2	Bit 1	Bit 0
DI7	DI6	DI5	DI4	DI3	DI2	DI1	DI0

Bit 15	Bit 14	Bit 13	Bit 12	Bit 11	Bit 10	Bit 9	Bit 8
DI15	DI14	DI13	DI12	DI11	DI10	DI9	DI8

Note. Refer to Sec. 3.1 for more information about wBase.

```
wDiValue=inport(wBase+0x14);      /* read the D/I states */
```

3.3.4 Digital Output

(Write) wBase+0x14: set the digital output channel 0 to 15

Bit 7	Bit 6	Bit 5	Bit 4	Bit 3	Bit 2	Bit 1	Bit 0
DO7	DO6	DO5	DO4	DO3	DO2	DO1	DO0

Bit 15	Bit 14	Bit 13	Bit 12	Bit 11	Bit 10	Bit 9	Bit 8
DO15	DO14	DO13	DO12	DO11	DO10	DO9	DO8

Note. Refer to Sec. 3.1 for more information about wBase.

```
outport(wBase+0x14,wDoValue);    /* control the D/O states */
```

3.3.5 Interrupt control/status register of PCI-TMC12(A)

(Read/Write) wPLX+0x4C: interrupt control/status register

Bit	Description
B0	INTERRUPT enable, 0=disable, 1=enable
B1	POLARITY, 1=active HIGH, 0=active LOW
B2	INTERRUPT status, 0=int not active, 1=int is active
B3	reserved
B4	reserved
B5	reserved
B6	PCI interrupt enable, 0=disable, 1=enable
B7	Software interrupt, a value of 1 will generate interrupt
B8 to B31	reserved

Refer to DEMO7.C, DEMO11.C, DEMO12.C and DEMO13.C for more information.

The interrupt of PCI-TMC12(A) is **level-trigger**. The interrupt signal can be **active-low or active-high** programmable. The procedures of programming are given as following:

1. make sure **the initial level is High or Low**
2. if the initial state is High → set the interrupt signal is active_low initially
3. if the initial state is Low → set the interrupt signal is active_high initially
4. If the interrupt signal is active → program will transfer into the interrupt service routine → **toggle the active_state before return from the ISR**.

■ **Example 1:** assume initial level=High

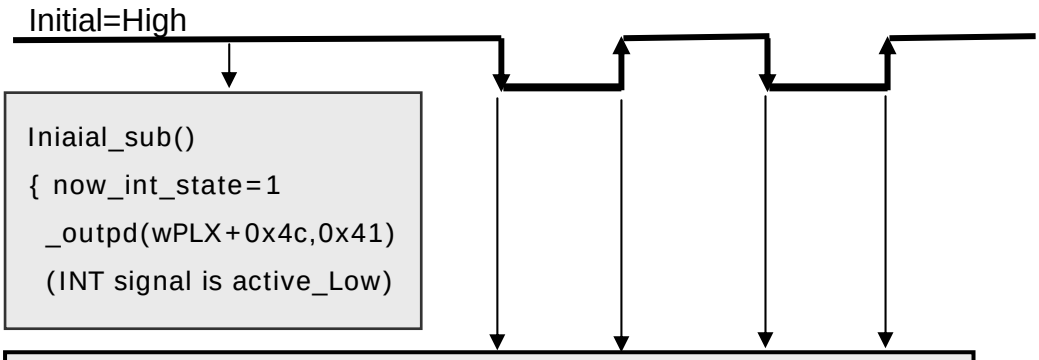


```
Iniaial_sub()
{ now_int_state=1
  _outpd(wPLX+0x4c,0x41)
  (INT signal is active_Low)
```

```
ISR_sub()
{
If (now_int_state==0) /*old state=low → change to high now */
   {
    now_int_state=1;              /* now int_signal is High      */

   *** application codes are given here ***

   _outpd(wPLX+0x4c,0x41);     /* active Low*/
   }
else                          /* old state=high→ change to low now */
   {
    now_int_state=0;              /* now int_signal is Low        */

*** application codes are given here ***

   _outpd(wPLX+0x4c,0x43);     /* active High */
   }

if (wIrq>=8) outportb(A2_8259,0x20);     /*  EOI  */
outportb(A1_8259,0x20);                  /*  EOI  */
}
```

■ **Example 2:** assume initial level=Low

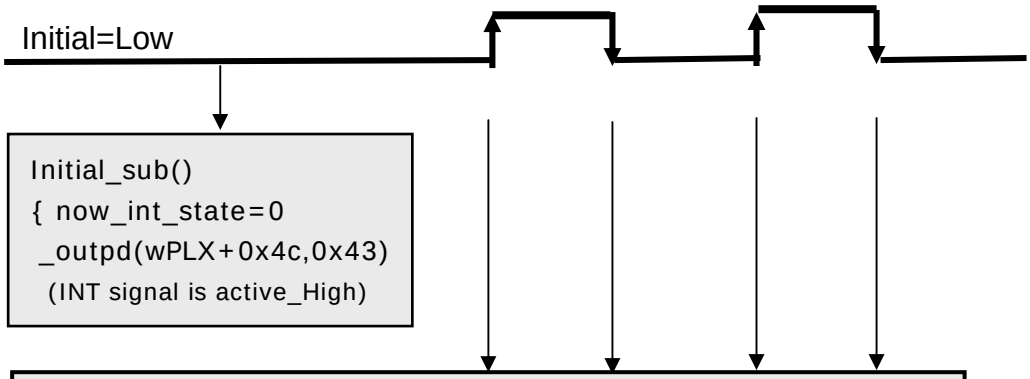


```
Initial_sub()
{ now_int_state=0
 _outpd(wPLX+0x4c,0x43)
  (INT signal is active_High)
```

```
ISR_sub()
{
If (now_int_state==0) /* old state=low → change to high now */
   {
    now_int_state=1;              /* now int_signal is High   */

   *** application codes are given here ***

   _outpd(wPLX+0x4c,0x41);    /* active Low         */
   }
else                          /* old state=high→ change to low now */
   {
    now_int_state=0;              /* now int_signal is Low*/

*** application codes are given here ***

   _outpd(wPLX+0x4c,0x43);     /* active High  */
   }

if (wIrq>=8) outportb(A2_8259,0x20);     /*  EOI  */
outportb(A1_8259,0x20);                  /*  EOI  */
}
```

So the ISR_sub will be active on the **rising edge and falling edge** of the interrupt signal. Refer to demo7.c, demo11.c, demo12.c and demo13.c for more information.

3.4 New features of PCI-TMC12A

3.4.1 Default Shipping of PCI-TMC12A

The default shipping of J28 is selected in TMC12A (Sec. 2.4.1 and Sec. 3.4.4), it is equivalent to PCI-TMC12. So the interrupt system of PCI-TMC12A in the default shipping is compatible to PCI-TMC12. Refer to Sec. 3.4.4 for interrupt block diagram of PCI-TMC12 and PCI-TMC12A.

All Xor? of PCI-TMC12A are clear to their Low states in the first power up stage, so all clock sources of PCI-TMC12A are compatible to those of PCI-TMC12. Refer to Sec. 3.4.2 for block diagram.

In general, you can buy one PCI-TMC12A and use it as PCI-TMC12. **All old application program designed for PCI-TMC12 can be executed in PCI-TMC12A without any modification.**

Key point → default shipping of PCI-TMC12A=PCI-TMC12

The new features of PCI-TMC12A are given as follows:

- The new interrupt mechanism (Sec. 3.4.4)
- The Xor? bits for 2 clocks generation (Sec. 3.4.2)
- There are 3 LEDs for status indicators (Sec. 3.4.3 and Sec. 2.1)
- It equips one smith trigger buffer for the selected clock source (Sec. 3.4.2)
- **One new D/O port, wBase+0x18**, for Xor-bits, XorInt and LED on/off control. Refer to Sec. 3.4.3 for more information.
- **One new D/I port, wBase+0x18**, for interrupt enable. The initial routine and ISR must input from wBase+0x18 to enable next interrupt operation. Refer to Sec. 3.4.4 for more information.
- Refer to new demo programs given in Sec. 3.4.5 for how to use these new features
- Refer to Sec. 2.1 for PCB layout of PCI-TMC12A

3.4.2 Clock input of 8254

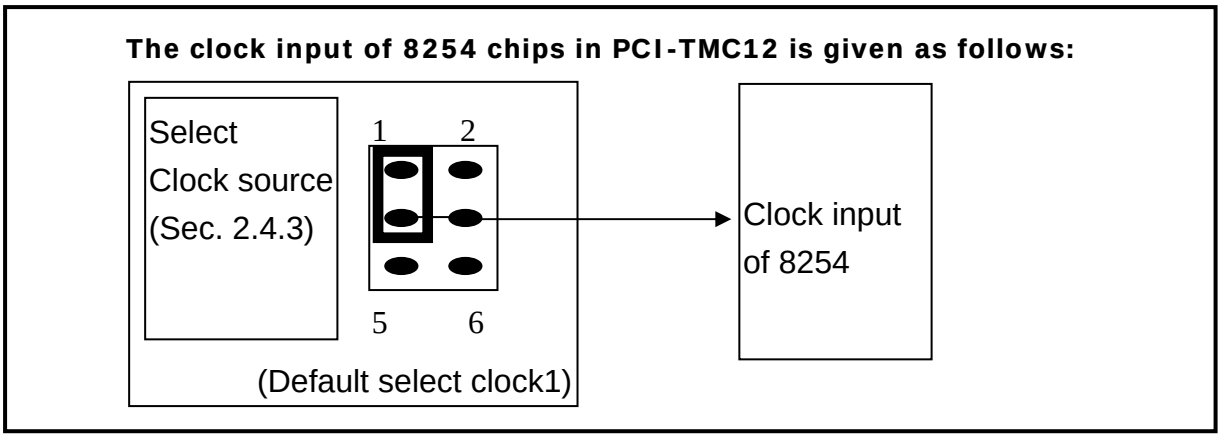

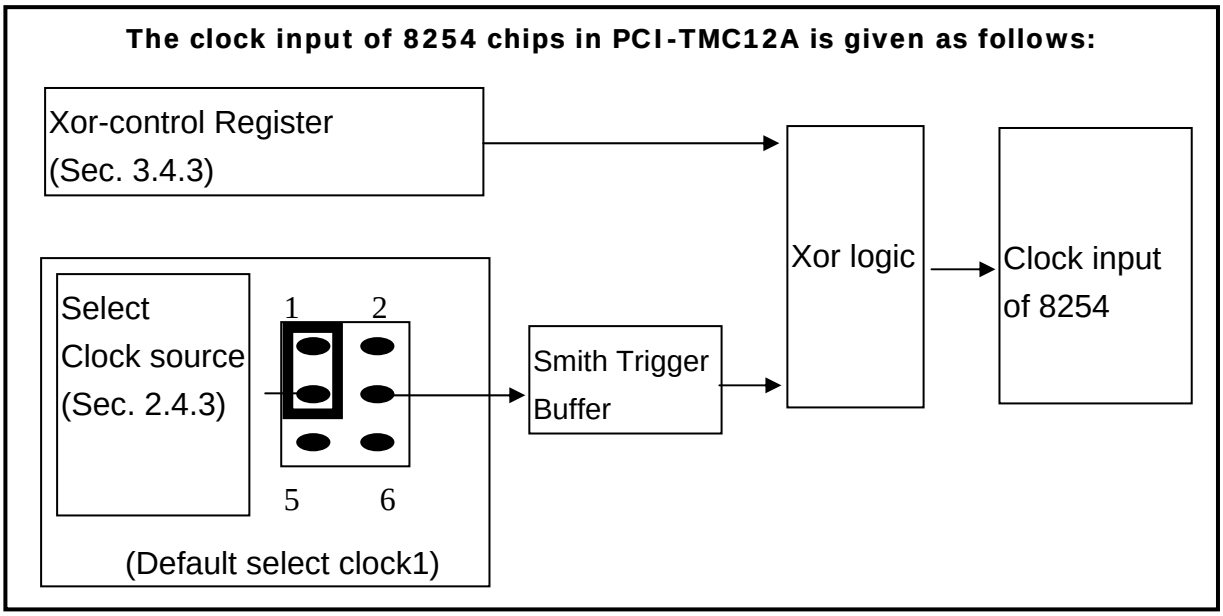

The new features of PCI-TMC12A are given as follows:

- A smith trigger buffer is added to remove noises in the selected clock source
- A Xor-control register is added to invert/non-inverted the selected clock source. This mechanism can be used to generate 2 extra starting clocks to 8254.

Note: The Xor-control register is clear to 0 when the PCI-TMC12A is first power-up. So the initial state of PCI-TMC12A is exactly compatible to PCI-TMC12.

Refer to Sec. 6.1.15 Ndemo2: Generate 2 Clocks, the twelve Xor-bits are used to generate the 2 starting clocks. So the initial value of 8254 can be verified after these 2 starting clocks are generated. Then they are used to generate one single clock for testing. In general, these Xor-bits are designed for generation of 2 starting clocks only.

3.4.3 Xor-control Register of PCI-TMC12A

(Write) wBase+0x18: set the Xor-control register

Bit 7	Bit 6	Bit 5	Bit 4	Bit 3	Bit 2	Bit 1	Bit 0
Xor8	Xor7	Xor6	Xor5	Xor4	Xor3	Xor2	Xor1

Bit 15	Bit 14	Bit 13	Bit 12	Bit 11	Bit 10	Bit 9	Bit 8
Led3	Led2	Led1	XorInt	Xor12	Xor11	Xor10	Xor9

Note 1: Refer to Sec. 3.1 for more information about wBase.

Note 2: All bits of this register will be clear to zero in the power-up stage.

Xor1 --> invert/non-invert the selected clock source of CLK1

Xor2 --> invert/non-invert the selected clock source of CLK2

……

Xor11 --> invert/non-invert the selected clock source of CLK11

Xor1 2--> invert/non-invert the selected clock source of CLK12

Xor?=0 --> non-invert, it is the power-up value

Xor?=1 --> invert

XorInt-->inverted/non-inverted the selected interrupt source

Led1 --> Led1=0 --> Turn LED1 ON, Led1=1 --> turn LED1 Off

Led2 --> Led2=0 --> Turn LED2 ON, Led2=1 --> turn LED2 Off

Led3 --> Led3=0 --> Turn LED3 ON, Led3=1 --> turn LED3 Off

- The Xor? is designed to generate the starting 2 clocks for 8254
- The XorInt is used to invert/non-invert the interrupt source to Low state, that is to say, **if the initial value of interrupt source is High, set this bit to High to invert it to Low state.** Refer to Sec. 6.1. 18 Ndemo5:Active Low Int for demo program.
- When the TMC12A is first power-up, the initial values are all zero. So Led1/2/3 are all turn ON. The Led1/2/3 are designed for status indicators. User can use them based on their special requirements.

Refer to Sec. 6.1.15 Ndemo2: Generate 2 Clocks, the twelve Xor-bits are used to generate the 2 starting clocks. So the initial value of 8254 can be verified after these 2 starting clocks are generated. Then they are used to generate single clock for testing. In general, these Xor-bits are designed for generation of 2 starting clocks only.

3.4.4 Block Diagram of Interrupt System

The block diagram of interrupt system in PCI-TMC12 is given as follows:

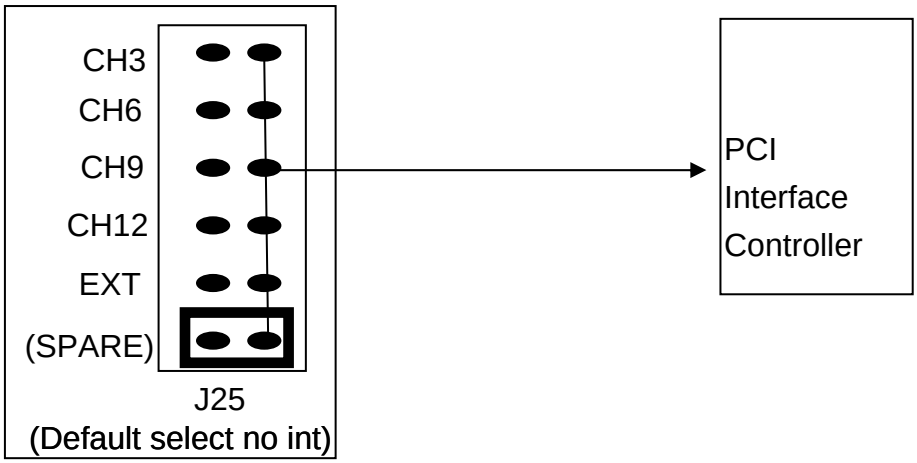

The block diagram of interrupt system in PCI-TMC12A is given as follows:

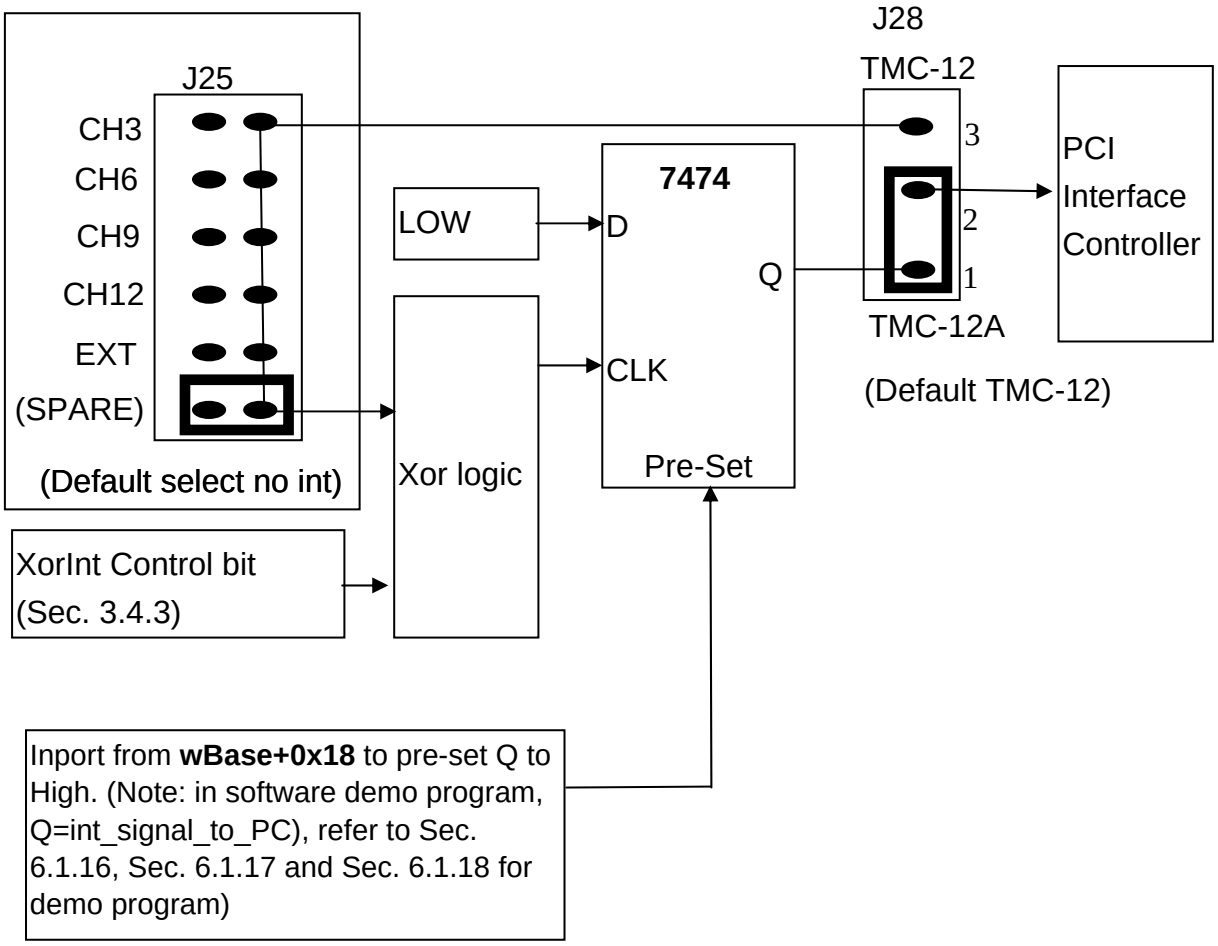

The interrupt mechanism of PCI-TMC12 can be active Low or active High. And the interrupt system of PCI bus is level trigger. So the Windows driver of PCI-TMC12 must create a thread to handle all interrupt active conditions. There are so many possible conditions, so the interrupt performance will be reduced very much.

The new interrupt mechanism of PCI-TMC12A is designed to improve the performance of Windows driver as follows:

- initial subroutine & ISR will inport from **wBase+0x18** to pre-set int_signal_to_PC (Q in Sec. 3.4.4) to High state to enable the next interrupt operation
- if the initial value of interrupt source is Low, set XorInt to 0 → rising-edge interrupt
- if the initial value of interrupt source is High, set XorInt to 1 → falling-edge interrupt
- the software driver is designed for rising-edge or falling-edge interrupt

When the interrupt ISR is executed, the int_signal_to_PC (Q in Sec. 3.4.4) is in Low state, so the interrupt ISR must inport from **wBase+0x18** to pre-set int_signal_to_PC to High state to enable next interrupt operation. Refer to Sec. 6.1.16, Sec. 6.1.17 and Sec. 6.1.18 for demo program

3.4.5 New Demo Program

- New demo program 1 → How to Use Status Indicators LEDs
  (Refer to Sec. 6.1.14 Ndemo1: Using LEDs)

- New demo program 2 → How to Generate the Starting 2 Clocks for 8254
  (Refer to Sec. 6.1.15 Ndemo2: Generate 2 Clocks)

- New demo program 3 → Modify demo7 (designed for PCI-TMC12) to fit the new interrupt mechanism of PCI-TMC12A)
  (Refer to Sec. 6.1.16 Ndemo3: New Demo7)

- New demo program 4 → interrupt source = initial low, active High
  (Refer to Sec. 6.1.17 Ndemo4: Active Low Int)

- New demo program 5 → interrupt source = initial High, active low
  (Refer to Sec. 6.1.18 Ndemo5: Active High Int)

4. Software Installation

The PCI-TMC12(A) card can be used in DOS and Windows 98/ME/NT/2K and 32-bit/64-bit Windows XP/2003/Vista/7. The recommended installation procedure for windows is given in Sec. 4.1 ~ 4.2. Or refer to Quick Start Guide (CD:\NAPDOS\PCI\PCI-TMC12A\Manual\QuickStart\).

http://ftp.icpdas.com/pub/cd/iocard/pci/napdos/pci/pci-tmc12a/manual/quickstart/

4.1 Software Installing Procedure

- UniDAQ SDK driver (32-bit/64-bit Windows XP/2003/Vista/7):

Step 1: Insert the companion CD into the CD-ROM drive and after a few seconds the installation program should start automatically. If it doesn't start automatically for some reason, double-click the **AUTO32.EXE** file in the **NAPDOS** folder on this CD.

Step 2: Click the item: "**PCI Bus DAQ Card**".

Step 3: Click the item: "**UniDAQ**".

Step 4: Click the item: "**DLL for Windows 2000 and XP/2003/Vista 32-bit**".

Step 5: Double-Click "**UniDAQ_Win_Setup_x.x.x.x_xxxx.exe**" file in the **Driver** folder.

- Windows driver (Windows 98/NT/2K and 32-bit Windows XP/2003/Vista/7):

Step 1: Insert the companion CD into the CD-ROM drive and after a few seconds the installation program should start automatically. If it doesn't start automatically for some reason, double-click the **AUTO32.EXE** file in the **NAPDOS** folder on this CD.

Step 2: Click the item: "**PCI Bus DAQ Card**".

Step 3: Click the item: "**PCI-TMC12A**".

Step 4: Click the item "**DLL and OCX for Windows 98/NT/2K and 32-bit Windows XP/2003/Vista/7**".

Step 5: Double-Click "**PCI_TMC12_Win_Setup_xxx.exe**" file in the **Driver** folder.

The setup program will then start the driver installation and copy the relevant files to the specified directory and register the driver on your computer. The directory where the drive is stoned is different for different windows versions, as shown below.

- **Windows 64-bit Windows XP/2003/Vista/7:**

The UniDAQ.DLL file will be copied into the C:\WINNT\SYSTEM32 folder

The NAPWNT.SYS and UniDAQ.SYS files will be copied into the C:\WINNT\SYSTEM32\DRIVERS folder

> **For more detailed UniDAQ.DLL function information, please refer to UniDAQ SDK user manual** (CD:\NAPDOS\PCI\UniDAQ\Manual\).
>
> http://ftp.icpdas.com/pub/cd/iocard/pci/napdos/pci/unidaq/maunal/

- **Windows NT/2K and 32-bit Windows XP/2003/Vista/7:**

The PTMC12.DLL file will be copied into the C:\WINNT\SYSTEM32 folder

The WINDRVR.SYS files will be copied into the C:\WINNT\SYSTEM32\DRIVERS folder

- **Windows 95/98/ME:**

The PTMC12.DLL and WINDRVR.Vxd files will be copied into the C:\Windows\SYSTEM folder

> **For more detailed PTMC12.DLL function information, please refer to "PCI-TMC12 DLL Software Manual.pdf"** (CD:\NAPDOS\PCI\PCI-TMC12A\Manual\). http://ftp.icpdas.com/pub/cd/iocard/pci/napdos/pci/pio-da/manual/

4.2 PnP Driver Installation

Power off the computer and install the PCI-TMC12(A) cards. Turn on the computer and Windows 98/Me/2K and 32-bit/64-bit Windows XP/2003/Vista/7 should automatically defect the new PCI device(s) and then ask for the location of the driver files for the hardware. If a problem is encountered during installation, refer to the PnPinstall.pdf file for more information.

4.3 Confirm the Successful Installation

Make sure the PCI-TMC12(A) card installed are correct on the computer as follows:

Step 1: Select **"Start"** → **"Control Panel"** and then double click the **"System"** icon on Windows.

Step 2: Click the **"Hardware"** tab and then click the **"Device Manager"** button.

Step 3: Check the PCI-TMC12(A) card which listed correctly or not, as illustrated below.

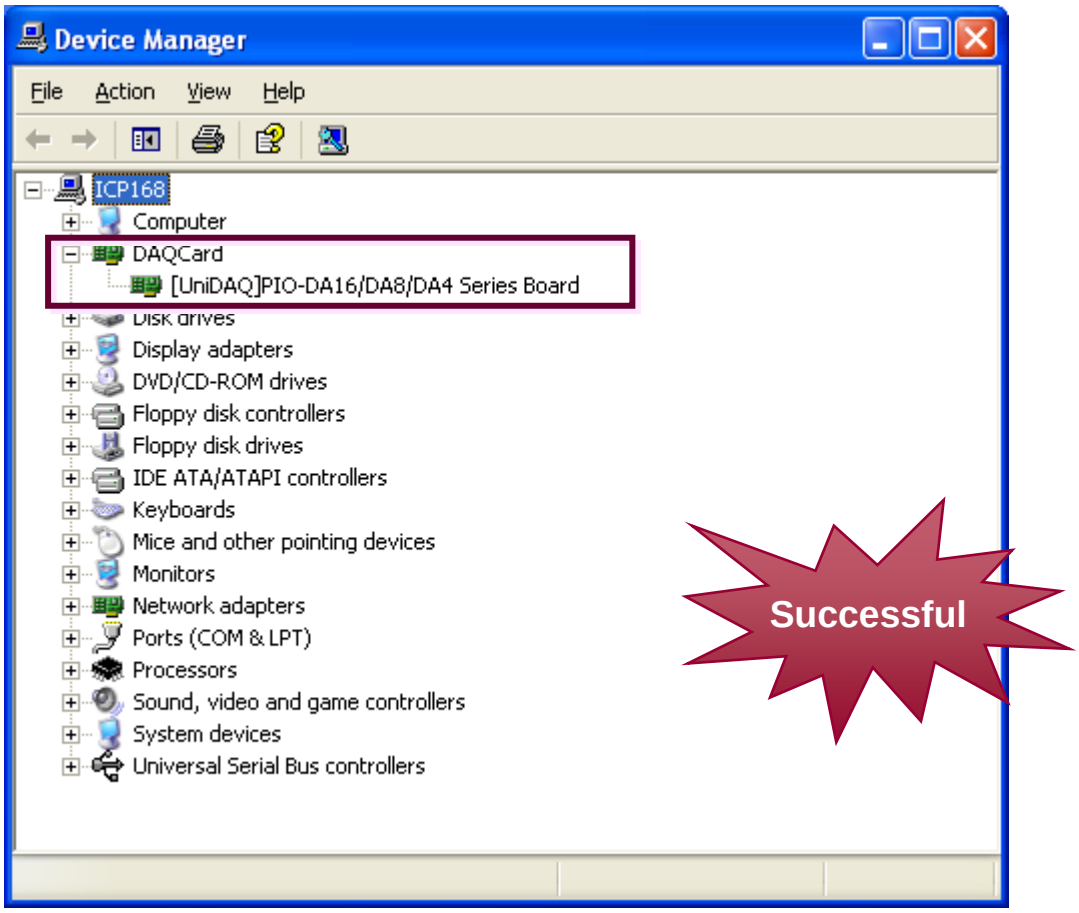

5. 8254 Programming

5.1 Control Word Format

D7	D6	D5	D4	D3	D2	D1	D0
SC1	SC0	RW1	RW0	M2	M1	M0	BCD

SC1	SC0	Description
0	0	Select counter_0
0	1	Select counter_1
1	0	Select counter_2
1	1	Read back command

RW1	RW0	Description
0	0	Counter latch command
0	1	Read/write LSB ONLY
1	0	Read/write MSB ONLY
1	1	Read/write LSB first, then read/write MSB

M2	M1	M0	Working mode
0	0	0	Mode 0
0	0	1	Mode 1
Don’t care	1	0	Mode 2
Don’t care	1	1	Mode 3
1	0	0	Mode 4
1	0	1	Mode 5

BCD	Description
0	Binary counter, 16-bits
1	Binary coded decimal (BCD) counter (4 decades)

5.2 Counter latch command

D7	D6	D5	D4	D3	D2	D1	D0
SC1	SC0	0	0	X	X	X	X

SC1	SC0	Description
0	0	Latch counter_0
0	1	Latch counter_1
1	0	Latch counter_2
1	1	Read back command

5.3 Read back command

D7	D6	D5	D4	D3	D2	D1	D0
1	1	/COUNT	/STATUS	CNT2	CNT1	CNT0	0

- D5=0 → latch counter value of selected counters
- D4=0 → latch status of selected counters
- D3=1 → select counter 2
- D2=1 → select counter 1
- D1=1 → select counter 0

5.4 Status byte format

D7	D6	D5	D4	D3	D2	D1	D0
Cout	Null count	RW1	RW2	M2	M1	M0	BCD

- D7=0 → Cout=Low; D7=1 → Cout=High
- D6=0 → count available for reading; D6=1 → null count
- D5 to D0 → setting value read back

6. Demo Program

6.1 Demo Programs for DOS

The application program of 8254 is very complicated. There are about 10 demo program given in the DOS floppy disk. The program sources of library and demo program are all given in the disk. These demo programs will help the user to solve their real world problem easier.

The DOS demo program is contained in:
CD:\NAPDOS\PCI\PCI-TMC12A\DOS\
http://ftp.icpdas.com/pub/cd/iocard/pci/napdos/pci/pci-tmc12a/dos/

- \TC*.* → for Turbo C 2.xx or above
- \TC\LARGE*.* → for large model
- \TC\LARGE\LIB*.* → for library source code
- \TC\LARGE\DEMO?*.* → demo program source code

- \TC\LARGE\LIB\PCITMC12.H → library header file
- \TC\LARGE\LIB\PCITMC12.C → library source file
- \TC\LARGE\LIB\A.BAT → compiler file
- \TC\LARGE\LIB\B.BAT → link file
- \TC\LARGE\LIB\PCITMC12.lib → library file

- \TC\LARGE\DEMO1\PCITMC12.H → library header file
- \TC\LARGE\DEMO1\DEMO1.C → demo1 source file
- \TC\LARGE\DEMO1\DEMO1.PRJ → TC project file
- \TC\LARGE\DEMO1\IOPORTL.LIB → I/O port library file
- \TC\LARGE\DEMO1\PCITMC12.LIB→ library file
- \TC\LARGE\DEMO1\DEMO1.EXE → demo1 execution file

6.1.1 Demo1: Use D/O

```
/* ------------------------------------------------------------ */
/* demo 1 : D/O demo                                            */
/* step 1 : connect a DB-16R to CON3 of PCI-TMC12               */
/* step 2 : run DEMO1.EXE                                       */
/* step 3 : check the LEDs of DB-16R will turn on sequentially */
/* ------------------------------------------------------------ */

#include "PCITMC12.H"

WORD pci_tmc12_do(WORD wDo);
WORD wBaseAddr, wIrq, wPLX;

int main()
{
int  i,j;
WORD wBoards,wRetVal;
char c;

clrscr();
wRetVal=PTMC12_DriverInit(&wBoards);
printf("\n(1) Threr are %d PCI-TMC12 Cards in this PC",wBoards);
if ( wBoards==0 )
   {
   putch(0x07);  putch(0x07);  putch(0x07);
   printf("(1) There are no PCI-TMC12 card in this PC !!!\n");
   exit(0);
   }

printf("\n(2) Show the Configuration Space of all PCI-TMC12:");
for(i=0; i<wBoards; i++)
   {
   PTMC12_GetConfigAddressSpace(i,&wBaseAddr,&wIrq,&wPLX);
   printf("\nCard_%d: wBaseAddr=%x, wIrq=%x, wPLX=%x"
          ,i,wBaseAddr,wIrq,wPLX);
   }

PTMC12_GetConfigAddressSpace(0,&wBaseAddr,&wIrq,&wPLX); /* card_0 */
printf("\n(3) *** Card_0 D/O test, wBaseAddr=%x ***",wBaseAddr);
j=1;
for(i=0; i<16; i++)
   {
   pci_tmc12_do(j); printf("\nTEST_%2d --> DO = %x",i,j);
   c=getch(); if ((c=='q') || (c=='Q')) return;
   j=j<<1; if (j==0) j=1;
   }

PTMC12_DriverClose();
}

/* ---------------------------------------------------------- */

WORD pci_tmc12_do(WORD wDo)
{
 outport(wBaseAddr+0x14,wDo);
 return(NoError);
}
```

6.1.2 Demo2: Use D/I

- If there is only one PCI-TMC12(A), this program will test this only card.
- If there are over one PCI-TMC12(A) cards installed in the PC system, this program will **test the second card**.
- How can we know which card is the second card? Please refer to Sec. 3.2 for more information.

```
/* ------------------------------------------------------------ */
/* demo 2: D/I demo                                             */
/* step 1: connect a CON2 & CON3 of PCI-TMC12 with a */
/*         20-pin 1-to-1 flat cable                             */
/* step 2: run DEMO2.EXE                                        */
/* ------------------------------------------------------------ */

#include "PCITMC12.H"
WORD pci_tmc12_do(WORD wDo);
void pci_tmc12_di(WORD *wDi);
WORD wBase,wIrq,wPLX;

int main()
{
int  i,j,k;
WORD wBoards,wRetVal;
char c;

clrscr();
wRetVal=PTMC12_DriverInit(&wBoards);
printf("\n(1) Threr are %d PCI-TMC12 Cards in this PC",wBoards);

if (wBoards>1)
    PTMC12_GetConfigAddressSpace(1,&wBase,&wIrq,&WPLX);/* card_1 */
else PTMC12_GetConfigAddressSpace(0,&wBase,&wIrq,&wPLX);/* card_0 */

printf("\n(3) *** D/I/O test , wBase=%x ***",wBase);
j=1;
for(i=0; i<16; i++)
  {
  pci_tmc12_do(j); pci_tmc12_di(&k);
  printf("\nTEST_%2d --> DO = %x , DI=%x",i,j,k);
  if (j!=k) printf(" <-- TEST ERROR");
  else      printf(" <-- TEST OK");
  j=j<<1; if (j==0) j=1;
  }

PTMC12_DriverClose();
}

/* ---------------------------------------------------------- */

void pci_tmc12_di(WORD *wDi)
{
WORD wRetVal;
(*wDi)=(inport(wBase+0x14))&0xffff;
}
```

6.1.3 Demo3: Wave Generator

```
/* ------------------------------------------------------------ */
/* demo 3 : Square Wave Generator                               */
/* step 1 : all CLK select clock1=8M                            */
/* step 2 : run DEMO3.EXE                                       */
/* step 3 : check all Cout of four 8254 by scope                */
/* ------------------------------------------------------------ */

#include "PCITMC12.H"

WORD pci_tmc12_select8254(char cChip);
WORD pci_tmc12_c0(char cConfig, char cLow, char cHigh);
WORD pci_tmc12_c1(char cConfig, char cLow, char cHigh);
WORD pci_tmc12_c2(char cConfig, char cLow, char cHigh);
WORD wBaseAddr,wIrq,wPLX;

int main()
{
int  i,j;
WORD wBoards,wRetVal;
char c;

clrscr();
wRetVal=PTMC12_DriverInit(&wBoards);
printf("\n(1) Threr are %d PCI-TMC12 Cards in this PC",wBoards);
if ( wBoards==0 )
   {
   putch(0x07);  putch(0x07);  putch(0x07);
   printf("(1) There are no PCI-TMC12 card in this PC !!!\n");
   exit(0);
   }
printf("\n(2) Show the Configuration Space of all PCI-TMC12:");
for(i=0; i<wBoards; i++)
   {
   PTMC12_GetConfigAddressSpace(i,&wBaseAddr,&wIrq,&wPLX);
   printf("\nCard_%d: wBaseAddr=%x, wIrq=%x, wPLX=%x"
          ,i,wBaseAddr,wIrq,wPLX);
   }

PTMC12_GetConfigAddressSpace(0,&wBaseAddr,&wIrq,&wPLX); /* card_0 */
printf("\n(3) *** Card_0, wBaseAddr=%x ***",wBaseAddr);

printf("\n(4) *** Square Wave Generator for CH1 to CH3 ***");
pci_tmc12_select8254(0);   /* select 8254-chip-1              */
pci_tmc12_c0(0x36,2,0);    /* CH-1,mode-3,low=2,high=0,cout=4M    */
pci_tmc12_c1(0x76,4,0);    /* CH-2,mode-3,low=4,high=0,cout=2M    */
pci_tmc12_c2(0xb6,8,0);    /* CH-3,mode-3,low=8,high=0,cout=1M    */

printf("\n(5) *** Square Wave Generator for CH4 to CH6 ***");
pci_tmc12_select8254(1);   /* select 8254-chip-2              */
pci_tmc12_c0(0x36,16,0);   /* CH-4,mode-3,low=16,high=0,cout=500K */
pci_tmc12_c1(0x76,32,0);   /* CH-5,mode-3,low=32,high=0,cout=250K */
pci_tmc12_c2(0xb6,64,0);   /* CH-6,mode-3,low=64,high=0,cout=125K */

printf("\n(6) *** Square Wave Generator for CH7 to CH9 ***");
pci_tmc12_select8254(2);   /* select 8254-chip-3                  */
pci_tmc12_c0(0x36,128,0);  /* CH-7,mode-3,low=128,high=0,cout=64K */
pci_tmc12_c1(0x76,0,1);    /* CH-8,mode-3,low=0,high=1,cout=32K   */
pci_tmc12_c2(0xb6,0,2);    /* CH-9,mode-3,low=0,high=2,cout=16K   */
```

```
printf("\n(7) *** Square Wave Generator for CH10 to CH12 ***");
pci_tmc12_select8254(3);   /* select 8254-chip-4              */
pci_tmc12_c0(0x36,0,4);    /* CH-10,mode-3,low=0,high=4,cout=8K  */
pci_tmc12_c1(0x76,0,8);    /* CH-11,mode-3,low=0,high=8,cout=4K  */
pci_tmc12_c2(0xb6,0,16);   /* CH-12,mode-3,low=0,high=16,cout=2K */

PTMC12_DriverClose();
}

/* ------------------------------------------------------------ */

WORD pci_tmc12_select8254(char cChip)
{
outportb(wBaseAddr+0x10,cChip);
return(NoError);
}

WORD pci_tmc12_c0(char cConfig, char cLow, char cHigh)
{
outportb(wBaseAddr+0x0C,cConfig);
outportb(wBaseAddr    ,cLow);
outportb(wBaseAddr    ,cHigh);
return(NoError);
}

WORD pci_tmc12_c1(char cConfig, char cLow, char cHigh)
{
outportb(wBaseAddr+0x0C,cConfig);
outportb(wBaseAddr+4   ,cLow);
outportb(wBaseAddr+4   ,cHigh);
return(NoError);
}

WORD pci_tmc12_c2(char cConfig, char cLow, char cHigh)
{
outportb(wBaseAddr+0x0C,cConfig);
outportb(wBaseAddr+8   ,cLow);
outportb(wBaseAddr+8   ,cHigh);
return(NoError);
}
```

6.1.4 Demo4: Delay One Ms

- This demo use CNT1 to implement a **machine independent timer**. So you can run this demo **in any speed PC** and find the * shown in screen every seconds. The machine independent timer is useful in industry application.

```
/* ---------------------------------------------------------- */
/* demo 4 : delay 1 ms Using CH-1                              */
/* step 1 : CLK-1 select clock1=8M                             */
/* step 2 : run demo4.exe                                       */
/* ---------------------------------------------------------- */

#include "PCITMC12.H"

WORD pci_tmc12_select8254(char cChip);
WORD pci_tmc12_c0(char cConfig, char cLow, char cHigh);
WORD pci_tmc12_c1(char cConfig, char cLow, char cHigh);
WORD pci_tmc12_c2(char cConfig, char cLow, char cHigh);
WORD wBaseAddr,wIrq,wPLX;

int main()
{
int  i,j;
WORD wBoards,wRetVal;
char c;

clrscr();
wRetVal=PTMC12_DriverInit(&wBoards);
printf("\n(1) Threr are %d PCI-TMC12 Cards in this PC",wBoards);

PTMC12_GetConfigAddressSpace(0,&wBaseAddr,&wIrq,&wPLX); /* card_0 */
printf("\n(3) *** Card_0, wBaseAddr=%x ***",wBaseAddr);

printf("\n(4) *** Delay 1 ms ***\n");
for (;;)
   {
   for (i=0; i<1000; i++) delay_one_ms();
   printf("*");
   if (kbhit()!=0) {getch(); return;}
   }
PTMC12_DriverClose();
}
/* CLK-1=8M --> count 0x1f40 = count 8000 = 1 ms              */
/* down count from 8000 --> 7999 --> ..... --> 1 --> 0 --> 0xfff */
delay_one_ms()
{
int low,high;
pci_tmc12_select8254(0);          /* select 8254-chip-0          */
pci_tmc12_c0(0x30,0x40,0x1f);     /* CH-1,mode-0 down count 8000  */
for (;;)
   {
   outportb(wBaseAddr+0x0C,0x00);  /* latch counter_0 */
   low=inportb(wBaseAddr);
   high=inportb(wBaseAddr);
   if (high>0x20) return;          /* overflow → time up      */
   }
}
```

6.1.5 Demo5: 16-bit Event Counter

```
/* ------------------------------------------------------------------------ */
/* demo 5 : 16-bit event down counter                                       */
/* step 1 : CNT1 select ECLK1 (JP22)                                        */
/* step 2 : run demo5.exe                                                   */
/* step 3 : connect the external CNT signal to pin1 of CON1                 */
/* ------------------------------------------------------------------------ */

#include "PCITMC12.H"
WORD pci_tmc12_select8254(char cChip);
WORD pci_tmc12_c0(char cConfig, char cLow, char cHigh);
WORD pci_tmc12_c1(char cConfig, char cLow, char cHigh);
WORD pci_tmc12_c2(char cConfig, char cLow, char cHigh);
WORD wBaseAddr,wIrq,wPLX;

int main()
{
int  i,j;
WORD wBoards,wRetVal;
char c;
unsigned int high,low,count;

clrscr();
wRetVal=PTMC12_DriverInit(&wBoards);
printf("\n(1) Threr are %d PCI-TMC12 Cards in this PC",wBoards);
if ( wBoards==0 )
   {
   putch(0x07);  putch(0x07);  putch(0x07);
   printf("(1) There are no PCI-TMC12 card in this PC !!!\n");
   exit(0);
   }

PTMC12_GetConfigAddressSpace(0,&wBaseAddr,&wIrq,&wPLX); /* card_0 */
printf("\n(3) *** Card_0, wBaseAddr=%x ***",wBaseAddr);

printf("\n(4) *** 16-bit event down counter ***\n");
pci_tmc12_select8254(0);              /* select 8254-chip-0     */
pci_tmc12_c0(0x30,0xff,0xff);         /* CH-1,mode-0 down count ffff */
for (;;)
    {
    outportb(wBaseAddr+0x0C,0x00); /* latch counter_0 */
    low=inportb(wBaseAddr);
    high=inportb(wBaseAddr);
    count=(0xff-high)*256+(0xff-low)+2;
    printf("\nhigh=%x, low=%x, count=%u",high,low,count);
    if (kbhit()!=0) {getch(); break;}
    }

PTMC12_DriverClose();
}
```

Note1: The starting two ECLK will be used to initialize 8254.
So → Total_Count = 0xffff - Current_Counnt + 2
Note2: If the count > 65536 → this 16-bit counter will be overflow.
So → refer to DEMO6 for infinite-bit counter.

6.1.6 Demo6: Software Counter

```
/* ------------------------------------------------------------ */
/* demo 6 : software event down counter                          */
/* step 1 : CNT1 select ECLK1 (JP22)                             */
/* step 2 : run demo6.exe                                        */
/* step 3 : connect the external CNT signal to pin1 of CON1     */
/* ------------------------------------------------------------ */

#include "PCITMC12.H"
WORD pci_tmc12_select8254(char cChip);
WORD pci_tmc12_c0(char cConfig, char cLow, char cHigh);
WORD pci_tmc12_c1(char cConfig, char cLow, char cHigh);
WORD pci_tmc12_c2(char cConfig, char cLow, char cHigh);
WORD wBaseAddr,wIrq,wPLX;

float c65536,software_count;
int main()
{
int  i,j;
WORD wBoards,wRetVal;
char c,s0;
unsigned int high,low;

c65536=0; s0=0;
clrscr();
wRetVal=PTMC12_DriverInit(&wBoards);
printf("\n(1) Threr are %d PCI-TMC12 Cards in this PC",wBoards);

PTMC12_GetConfigAddressSpace(0,&wBaseAddr,&wIrq,&wPLX); /* card_0 */
printf("\n(3) *** Card_0, wBaseAddr=%x ***",wBaseAddr);

printf("\n(4) *** 16-bit event down counter ***\n");

pci_tmc12_select8254(0);            /* select 8254-chip-0        */
pci_tmc12_c0(0x30,0xff,0xff);       /* CH-1,mode-0 down count ffff */
for (;;)
   {
   outportb(wBaseAddr+0x0C,0x00); /* latch counter_0 */
   low=inportb(wBaseAddr);
   high=inportb(wBaseAddr);
   if (high < 0x80) s0=1;
   if ((high > 0x80 ) && (s0==1))
      {
      c65536 += 1.0; s0=0;
      }
   software_count=c65536*65536.0+(0xff-high)*256+(0xff-low)+2;
   printf("\nhigh=%x, low=%x, c65536=%f, software_count=%f"
   ,high,low,c65536,software_count);
   if (kbhit()!=0) {getch(); break;}
   }

PTMC12_DriverClose();
}
```

Note 1: The starting two ECLK will be used to initialize 8254.
Note 2: c65536 will be increment by 1 every 65536 counts
Note 3: So → Total_Count = c65536*65536 + 0xffff - Current_Counnt + 2
Note 4: This software counter can be nearly infinite-bits.

6.1.7 Demo7: Watchdog Timer

```
/* ------------------------------------------------------------ */
/* demo 7 : watchdog timer using CH-3                           */
/* step 1 : CLK-3 select clock2=80K (J24)                       */
/* step 2 : INT select CH3 (J2                                  */
/* step 3 : run demo7.exe                                       */
/* ------------------------------------------------------------ */

#include "PCITMC12.H"
#define A1_8259 0x20
#define A2_8259 0xA0
#define EOI   0x20

WORD pci_tmc12_select8254(char cChip);
WORD pci_tmc12_c0(char cConfig, char cLow, char cHigh);
WORD pci_tmc12_c1(char cConfig, char cLow, char cHigh);
WORD pci_tmc12_c2(char cConfig, char cLow, char cHigh);
WORD init_watchdog();
WORD wBaseAddr,wIrq,wPLX;

static void interrupt irq_service();
int watchdog,irqmask;

int main()
{
int  i,j;
WORD wBoards,wRetVal;
char c;
DWORD dwVal;

clrscr();
wRetVal=PTMC12_DriverInit(&wBoards);
printf("\n(1) Threr are %d PCI-TMC12 Cards in this PC",wBoards);
if ( wBoards==0 )
   {
   putch(0x07);  putch(0x07);  putch(0x07);
   printf("(1) There are no PCI-TMC12 card in this PC !!!\n");
   exit(0);
   }

PTMC12_GetConfigAddressSpace(0,&wBaseAddr,&wIrq,&wPLX); /* card_0 */
printf("\n(3)Card_0, wIrq=%x, wPLX=%x ",wIrq,wPLX);

watchdog=0;
pci_tmc12_select8254(0);         /* select 8254-chip-0          */
printf("\n(4) *** start refresh watchdog **\n");
init_watchdog();

for (;;)
    {
    refresh_watchdog();
    printf("\npress any key to simulate PC fail,watch=%d",watchdog);
    if (kbhit()!=0) {getch(); break;}
    }

printf("\nWait watchdog failure");
```

```
for (;;)
   {
   if (watchdog != 0)
      {
      printf("\nwatchdog is failure now");
      break;
      }
   if (kbhit()!=0) {getch(); break;}
   }

PTMC12_DriverClose();
_outpd(wPLX+0x4c,0); /* disable all interrupt */
}
/* ---------------------------------------------------------- */

WORD init_watchdog()
{
DWORD dwVal;

disable();

refresh_watchdog();
_outpd(wPLX+0x4c,0x41);  /* channel_1, interrupt active_Low */

if (wIrq<8)
   {
   irqmask=inportb(A1_8259+1);
   outportb(A1_8259+1,irqmask & (0xff ^ (1 << wIrq)));
   setvect(wIrq+8, irq_service);
   printf("<%x>",wIrq);
   }
else
   {
   irqmask=inportb(A1_8259+1);
   outportb(A1_8259+1,irqmask & 0xfb);              /* IRQ2 */
   outportb(A1_8259+1,irqmask & (0xff ^ (1 << wIrq)));
   irqmask=inportb(A2_8259+1);
   outportb(A2_8259+1,irqmask & (0xff ^ (1 << (wIrq-8))));
   setvect(wIrq-8+0x70, irq_service);
   printf("[%x]",wIrq);
   }

enable();
}

/* 80K*65536_count=0.8192 sec --> high_width=0.4096 sec    */
/* --> the user has to refresh the watchdog before 0.4 sec */
refresh_watchdog()
{
pci_tmc12_c2(0xb6,0xff,0xff);          /* mode_3, CNT2--> CH3        */
return(NoError);
}

void interrupt irq_service()
{
watchdog++;
if (wIrq>=8) outportb(A2_8259,0x20);
outportb(A1_8259,0x20);
}
```

Refer to Sec. 3.3.5 for more information.

6.1.8 Demo8: Pulse Width Measure

```
/* ------------------------------------------------------------ */
/* demo 8 : Pulse Width Measure                                 */
/* step 1 : J19 select EXTG1, J22 select CLOCL1=8M hz           */
/* step 2 : connect pin20 of CON1 to pin1 of CON2               */
/* step 3 : connect external signal to (pin20,pin19)            */
/* step 4 : run demo8.exe, the width of active high pulse will */
/*       be shown in the screen. (8 ms max.)                   */
/* ------------------------------------------------------------ */

#include "PCITMC12.H"

void pci_tmc12_di(WORD *wDi);
WORD pci_tmc12_select8254(char cChip);
WORD pci_tmc12_c0(char cConfig, char cLow, char cHigh);
WORD pci_tmc12_c1(char cConfig, char cLow, char cHigh);
WORD pci_tmc12_c2(char cConfig, char cLow, char cHigh);
WORD wBaseAddr,wIrq,wPLX;

int main()
{
int  i,j,k;
WORD wBoards,wRetVal;
char c,cc[80];
unsigned int high,low,count;
float ms;

clrscr();
wRetVal=PTMC12_DriverInit(&wBoards);
printf("\n(1) Threr are %d PCI-TMC12 Cards in this PC",wBoards);
if ( wBoards==0 )
   {
   putch(0x07);  putch(0x07);  putch(0x07);
   printf("(1) There are no PCI-TMC12 card in this PC !!!\n");
   exit(0);
   }

printf("\n(2) Show the Configuration Space of all PCI-TMC12:");
for(i=0; i<wBoards; i++)
   {
   PTMC12_GetConfigAddressSpace(i,&wBaseAddr,&wIrq,&wPLX);
   printf("\n    Card_%d: wBaseAddr=%x, wIrq=%x, wPLX=%x"
          ,i,wBaseAddr,wIrq,wPLX);
   }

PTMC12_GetConfigAddressSpace(0,&wBaseAddr,&wIrq,&wPLX); /* card_0 */
printf("\n(3) *** Card_0, wBaseAddr=%x ***",wBaseAddr);

printf("\n(4) *** read EXTG1 & show 80-read ***\n",wBaseAddr);
for (i=0; i<80; i++)
    {
    pci_tmc12_di(&k);
    cc[i]=k;
    }

for (i=0; i<80; i++)
    {
    j=cc[i]&0x01;
    if (j==0) printf("0"); else printf("1");
    }
```

```
while (((inport(wBaseAddr+0x14))&1)==0);/* wait EXG1=High          */
while (((inport(wBaseAddr+0x14))&1)!=0);/* wait EXG1=Low           */

pci_tmc12_select8254(0);            /* select 8254-chip-0        */
pci_tmc12_c0(0x30,0xff,0xff);       /* CH-1,mode-0 down count ffff */

while (((inport(wBaseAddr+0x14))&1)==0);/* wait EXG1=High          */
while (((inport(wBaseAddr+0x14))&1)!=0);/* wait EXG1=Low           */

outportb(wBaseAddr+0x0C,0x00);              /* latch counter_0 */
low=inportb(wBaseAddr);
high=inportb(wBaseAddr);
count=(0xff-high)*256+(0xff-low)+2;
ms=0.000125*(float)count;
printf("\nhigh=%x, low=%x, count=%d : %f ms",high,low,count,ms);

PTMC12_DriverClose();
}
```

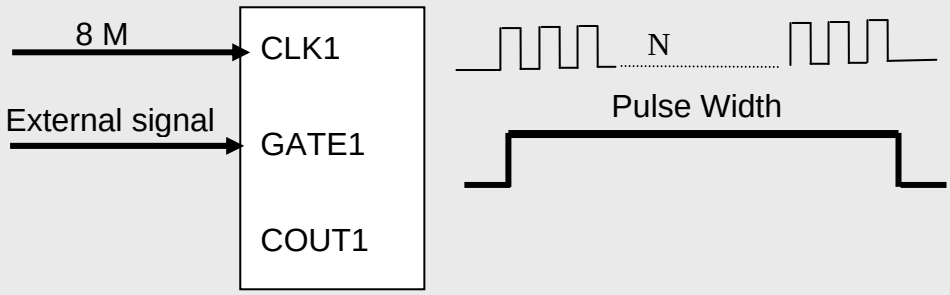

- **N=number of down count in CNT1(8 M clock)**
- **Pulse width=8M_width * N**

6.1.9 Demo9: Frequency Measure

```
/* ------------------------------------------------------------ */
/* demo 9 : Signal Frequency Measure                            */
/* step 1 : J19 select EXTG1, J22 select CLOCL1=8M hz           */
/* step 2 : J20 select \COUT1,J23 select ECLK2                  */
/* step 3 : connect external signal to (pin21,pin19)            */
/* step 4 : run demo9.exe, the frequency of input signal will   */
/*       be shown in the screen. (125 Hz min.)                  */
/* ------------------------------------------------------------ */

#include "PCITMC12.H"

void pci_tmc12_di(WORD *wDi);
WORD pci_tmc12_select8254(char cChip);
WORD pci_tmc12_c0(char cConfig, char cLow, char cHigh);
WORD pci_tmc12_c1(char cConfig, char cLow, char cHigh);
WORD pci_tmc12_c2(char cConfig, char cLow, char cHigh);
WORD wBaseAddr,wIrq,wPLX;

int main()
{
int  i,j,k;
WORD wBoards,wRetVal;
char c,cc[80];
unsigned int high,low,count,cout0;
float f,t;

clrscr();
wRetVal=PTMC12_DriverInit(&wBoards);
printf("\n(1) Threr are %d PCI-TMC12 Cards in this PC",wBoards);
if ( wBoards==0 )
   {
   putch(0x07);  putch(0x07);  putch(0x07);
   printf("(1) There are no PCI-TMC12 card in this PC !!!\n");
   exit(0);
   }

PTMC12_GetConfigAddressSpace(0,&wBaseAddr,&wIrq,&wPLX); /* card_0 */
printf("\n(3) *** Card_0, wBaseAddr=%x ***",wBaseAddr);

printf("\n(4) *** frequency must be > 125 Hz ***\n",wBaseAddr);

pci_tmc12_select8254(0);              /* select 8254-chip-0         */
pci_tmc12_c0(0x30,0xff,0xff);         /* CH-1,mode-0 down count ffff */
pci_tmc12_c1(0x70,0xff,0xff);         /* CH-2,mode-0 down count ffff */

for (;;)
    {
    outportb(wBaseAddr+0x0C,0xE2); /* latch status of counter0    */
    low=inportb(wBaseAddr);
    high=inportb(wBaseAddr);
    cout0=low&0x80;
    if (cout0!=0) break;
    if (kbhit()!=0) {getch(); break;}
    }

outportb(wBaseAddr+0x0C,0x40);          /* latch counter_1 */
low=inportb(wBaseAddr+0x04);
high=inportb(wBaseAddr+0x04);
count=(0xff-high)*256+(0xff-low)+2;
```

```
/* COUT0 = 65536*0.000125=8.192 ms */
t=8.192/(float)count;   /* ms      */
f=(1.0/t)*1000.0; /* f=1/T */
printf("\nhigh=%x, low=%x, count=%d : frequency = %f Hz",high,low,count,f);

PTMC12_DriverClose();
}
```

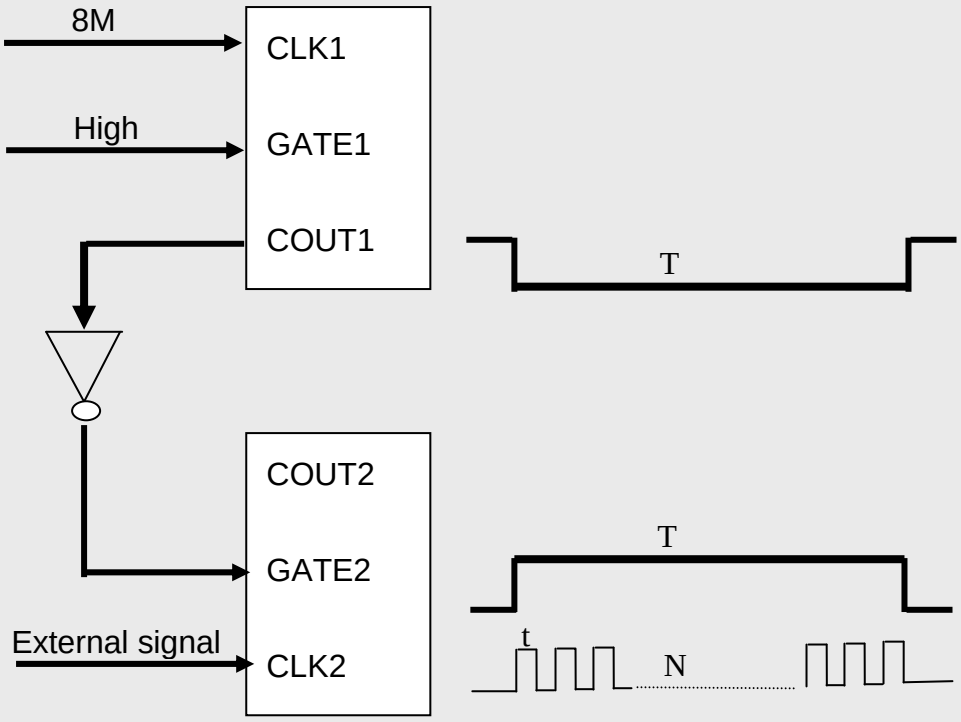

- **Down_count2=number of down count in CNT2**
- **t=T/Down_count2**
- **f=1/t**
- **The CNT1 can be changed to CNT3/4/5/6. The COUT of CNT 8/9/10/11/12/13 are directly connected to next counter without inverter. So they can not be used to replace CNT1.**
- **The 12 CNTs of TMC-12 are divided into two groups: inverter group & non-inverted group. The inverted group includes CNT 1/2/3/4/5/6. The non-inverted group included CNT 7/8/9/10/11/12. The user has to select his proper group for different application.**

6.1.10 Demo10: Find Card Number

```
/* ---------------------------------------------------------------- */
/* demo 10: Find card number demo                                   */
/* step 1 : run DEMO10.EXE                                          */
/* step 2 : connect a 20-pin flat cable to CON2&CON3 of card_? */
/* step 3 : The card number is shown in screen as TEST OK      */
/* ---------------------------------------------------------------- */

#include "PCITMC12.H"

WORD pci_tmc12_do(WORD wDo);
void pci_tmc12_di(WORD *wDi);
WORD pci_tmc12_select8254(char cChip);
WORD pci_tmc12_c0(char cConfig, char cLow, char cHigh);
WORD pci_tmc12_c1(char cConfig, char cLow, char cHigh);
WORD pci_tmc12_c2(char cConfig, char cLow, char cHigh);
WORD wBaseAddr,wIrq;

int main()
{
int  i,j,k;
WORD wBoards,wRetVal;
char c;

clrscr();
wRetVal=PTMC12_DriverInit(&wBoards);
printf("\n(1) Threr are %d PCI-TMC12 Cards in this PC",wBoards);
if ( wBoards==0 )
   {
   putch(0x07);  putch(0x07);  putch(0x07);
   printf("(1) There are no PCI-TMC12 card in this PC !!!\n");
   exit(0);
   }

for (;;)
    {
    printf("\n------------- press any key to stop -------------");
    for (i=0; i<wBoards; i++) test_card(i);
    for (i=0; i<1000; i++) delay_one_ms();      /* delay 1 sec */
    if (kbhit()!=0) {getch(); break;}
    }
PTMC12_DriverClose();
}

/* ---------------------------------------------------------- */

test_card(int card)
{
int i,j,k,ok;

PTMC12_GetConfigAddressSpace(card,&wBaseAddr,&wIrq);
j=1; ok=1;
for(i=0; i<16; i++)
   {
   pci_tmc12_do(j); pci_tmc12_di(&k);
   if (j!=k) ok=0;
   j=j<<1; if (j==0) j=1;
   }
printf("\nCard Number=%d, wBaseAddr=%x",card,wBaseAddr);
if (ok==1) printf(", Test OK"); else printf(", Test ERROR");
}
```

6.1.11 Demo11: Count Low Pulse

```
/* ---------------------------------------------------------------- */
/* demo 11: count low pulse                                          */
/*       (Use CH-3 to simulate external pulse)                       */
/* step 1 : CLK-3 select clock2=80K                                  */
/* step 2 : J25 select CH3                                           */
/* step 3 : run demo11.exe                                           */
/* ---------------------------------------------------------------- */

#include "PCITMC12.H"

#define A1_8259 0x20
#define A2_8259 0xA0
#define EOI   0x20

WORD pci_tmc12_select8254(char cChip);
WORD pci_tmc12_c0(char cConfig, char cLow, char cHigh);
WORD pci_tmc12_c1(char cConfig, char cLow, char cHigh);
WORD pci_tmc12_c2(char cConfig, char cLow, char cHigh);
WORD init_CH3();
WORD wBaseAddr,wIrq,wPLX;

static void interrupt irq_service();
int COUNT3,irqmask,now_int_state;

int main()
{
int  i,j;
WORD wBoards,wRetVal;
char c;
DWORD dwVal;

clrscr();
wRetVal=PTMC12_DriverInit(&wBoards);
printf("\n(1) Threr are %d PCI-TMC12 Cards in this PC",wBoards);
if ( wBoards==0 )
   {
   putch(0x07);  putch(0x07);  putch(0x07);
   printf("(1) There are no PCI-TMC12 card in this PC !!!\n"); exit(0);
   }

PTMC12_GetConfigAddressSpace(0,&wBaseAddr,&wIrq,&wPLX); /* card_0 */
printf("\n(3) *** Card_0, wBaseAddr=%x ***",wBaseAddr);

COUNT3=0;
pci_tmc12_select8254(0);         /* select 8254-chip-0          */
printf("\n(4) *** show the count of low_pulse **\n");
init_CH3();

for (;;)
    {
    printf("\nCOUNT3=%d",COUNT3);
    if (kbhit()!=0) {getch(); break;}
    }

PTMC12_DriverClose();
_outpd(wPLX+0x4c,0); /* disable all interrupt */
}
/* ---------------------------------------------------------- */
```

```
/* Use CH3 to simulate the external signal                    */
/* The user can must set the J25=CH3 in this demo.                 */
/* The user can set the J25=EXT in real world application.    */

WORD init_CH3()
{
DWORD dwVal;

disable();
pci_tmc12_c2(0xb6,0xff,0xff);    /* mode_3, CNT2--> CH3          */
/* 80K*65536_count=0.8192 sec --> high_width=0.4096 sec         */
/* --> high_width=0.4 sec, low_width=0.4 sec,                  */
now_int_state=1;                 /* now COUT3 is High          */

_outpd(wPLX+0x4c,0x41); /* channel_1, interrupt active_Low   */
if (wIrq<8)
   {
   irqmask=inportb(A1_8259+1);
   outportb(A1_8259+1,irqmask & (0xff ^ (1 << wIrq)));
   setvect(wIrq+8, irq_service);
   }
else
   {
   irqmask=inportb(A1_8259+1);
   outportb(A1_8259+1,irqmask & 0xfb);              /* IRQ2 */
   outportb(A1_8259+1,irqmask & (0xff ^ (1 << wIrq)));
   irqmask=inportb(A2_8259+1);
   outportb(A2_8259+1,irqmask & (0xff ^ (1 << (wIrq-8))));
   setvect(wIrq-8+0x70, irq_service);
   }

enable();
}

void interrupt irq_service()
{
if (now_int_state==0)       /* old state=low → change to high now */
   {
                                  /* find a high_pulse here           */

   now_int_state=1;               /* now int_signal is High           */
   _outpd(wPLX+0x4c,0x41);        /* channel_1, interrupt active_Low */
   }
else
   {                        /* old state=high → change to low now  */
                                  /* find a low_pulse                 */
   now_int_state=0;               /* now int_signal is low            */
   COUNT3++;                      /* only count low pulse             */
  _outpd(wPLX+0x4c,0x43); /* channel_1, interrupt active_High  */
  }

if (wIrq>=8) outportb(A2_8259,0x20);
outportb(A1_8259,0x20);
}
```

Refer to Sec. 3.3.5 for more information.

6.1.12 Demo12: Low Pulse Width

```
/* ---------------------------------------------------------------- */
/* demo 12: detect the pulse_width of low_pulse                     */
/*       (Use CH-3 to simulate external pulse)                      */
/* step 1 : CLK-3 select clock2=80K --> simulate ext signal         */
/* step 2 : CLK-1 select clock1=8M  --> generate BASE clock         */
/* step 3 : CLK-2 select COUT1=1K   --> measure pulse-width*/
/* step 4 : J25 select CH3                                          */
/* step 5 : run demo12.exe                                          */
/* ---------------------------------------------------------------- */

#include "PCITMC12.H"

#define A1_8259 0x20
#define A2_8259 0xA0
#define EOI   0x20

WORD pci_tmc12_select8254(char cChip);
WORD pci_tmc12_c0(char cConfig, char cLow, char cHigh);
WORD pci_tmc12_c1(char cConfig, char cLow, char cHigh);
WORD pci_tmc12_c2(char cConfig, char cLow, char cHigh);
WORD init_CH3();
WORD wBaseAddr,wIrq,wPLX;

static void interrupt irq_service();
int COUNT3,WIDTH3,CNT_H,CNT_L,irqmask,now_int_state;

int main()
{
int  i,j;
WORD wBoards,wRetVal,count;
char c;
DWORD dwVal;
float low_pulse_width;

clrscr();
wRetVal=PTMC12_DriverInit(&wBoards);
printf("\n(1) Threr are %d PCI-TMC12 Cards in this PC",wBoards);
if ( wBoards==0 )
   {
   putch(0x07);  putch(0x07);  putch(0x07);
   printf("(1) There are no PCI-TMC12 card in this PC !!!\n"); exit(0);
   }

PTMC12_GetConfigAddressSpace(0,&wBaseAddr,&wIrq,&wPLX); /* card_0 */
printf("\n(3) *** Card_0, wBaseAddr=%x ***",wBaseAddr);

printf("\n***(4) detect the pulse_width of low_pulse ***");
pci_tmc12_select8254(0);         /* select 8254-chip-0          */
for(;;)
   {
   printf("\npress any key to continue, Q to stop");
   c=getch(); if ((c='q') || (c='Q')) goto ret_label;
   COUNT3=0;
   init_CH3();
   while (COUNT3 < 4)
      {
      if (kbhit()!=0) {getch(); break;}
      }
```

```
   count=(0xff-CNT_H)*256+(0xff-CNT_L)+2;
   /* COUT0 = 1 ms */
   low_pulse_width=(float)count*1.0;
   printf("\nCNT_H=%x, CNT_L=%x,
Low_pulse=%f",CNT_H,CNT_L,low_pulse_width);
   }

ret_label:
PTMC12_DriverClose();
_outpd(wPLX+0x4c,0); /* disable all interrupt */
}
/* ---------------------------------------------------------------------- */
/* Use CH3 to simulate the external signal                                */
/* The user can must set the J25=CH3 in this demo.                        */
/* The user can set the J25=EXT in real world application.                */
WORD init_CH3()
{
DWORD dwVal;

disable();

pci_tmc12_c2(0xb6,0xff,0xff);    /* mode_3, CNT2--> CH3                  */
/* 80K*65536_count=0.8192 sec --> high_width=0.4096 sec                  */
/* --> high_width=0.4 sec, low_width=0.4 sec                        */

pci_tmc12_c0(0x36,0,32);         /* CH-1,mode-3,low=0,high=32,cout=1K*/
_outpd(wPLX+0x4c,0x41);          /* channel_1, interrupt active_Low      */
now_int_state=1;                 /* now int_signal is High               */
if (wIrq<8)
   {
   irqmask=inportb(A1_8259+1);
   outportb(A1_8259+1,irqmask & (0xff ^ (1 << wIrq)));
   setvect(wIrq+8, irq_service);
   }
else
   {
   irqmask=inportb(A1_8259+1);
   outportb(A1_8259+1,irqmask & 0xfb);              /* IRQ2 */
   outportb(A1_8259+1,irqmask & (0xff ^ (1 << wIrq)));
   irqmask=inportb(A2_8259+1);
   outportb(A2_8259+1,irqmask & (0xff ^ (1 << (wIrq-8))));
   setvect(wIrq-8+0x70, irq_service);
   }

enable();
}
void interrupt irq_service()
{
if (now_int_state==0)        /* old state=low → change to high now */
   {
   COUNT3++;                   /* find a HIGH_pulse                    */
   if (COUNT3==4)            /* stop down-count & read-counter        */
      {
      outportb(wBaseAddr+0x0C,0x40); /* latch counter1            */
      CNT_L=inportb(wBaseAddr+0x04);
      CNT_H=inportb(wBaseAddr+0x04);
      _outpd(wPLX+0x4c,0);       /* disable all interrupt        */
      }
   _outpd(wPLX+0x4c,0x41);          /* channel_1, interrupt active_Low */
   now_int_state=1;                 /* now int_signal is High          */
   }
```

```
else                    /* old state=low → change to high now  */
   {
   COUNT3++;                          /* find a low_pulse          */
   if (COUNT==3)                      /* start counter                 */
      pci_tmc12_c1(0x70,0xff,0xff);   /* CH-2,mode-0 down count ffff */
   else
      _outpd(wPLX+0x4c,0x43);         /* channel_1, interrupt active_High*/
   now_int_state=0;                   /* now int_signal is Low         */
   }

if (wIrq>=8) outportb(A2_8259,0x20);
outportb(A1_8259,0x20);
}
```

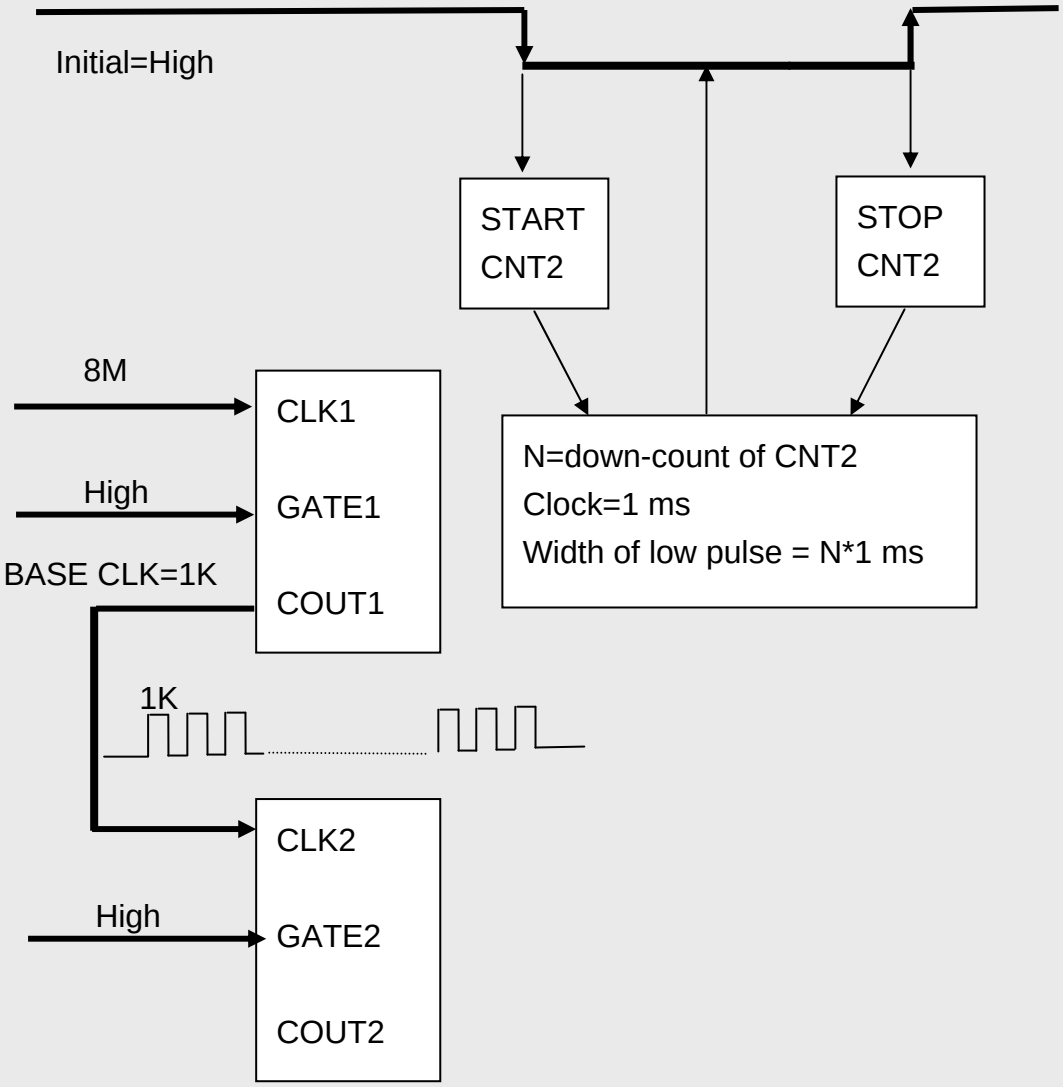

Refer to Sec. 3.3.5 for more information.

6.1.13 Demo13: High Pulse Width

```
/* ------------------------------------------------------------------- */
/* demo 13 detect the pulse_width of high_pulse                        */
/*       (Use CH-3 to simulate external pulse)                         */
/* step 1 : CLK-3 select clock2=80K --> simulate ext signal            */
/* step 2 : CLK-1 select clock1=8M  --> generate BASE clock            */
/* step 3 : CLK-2 select COUT1=1K   --> measure pulse-width            */
/* step 4 : J25 select CH3                                             */
/* step 5 : run demo13.exe                                             */
/* ------------------------------------------------------------------- */
/* ------------------------------------------------------------------- */
/* Use CH3 to simulate the external signal                             */
/* The user can must set the J25=CH3 in this demo.                     */
/* The user can set the J25=EXT in real world application.             */
/* ------------------------------------------------------------------- */

WORD init_CH3()
{
DWORD dwVal;

disable();

pci_tmc12_c2(0xb6,0xff,0xff);    /* mode_3, CNT2--> CH3                */
/* 80K*65536_count=0.8192 sec --> high_width=0.4096 sec                */
/* --> high_width=0.4 sec, low_width=0.4 sec                           */

pci_tmc12_c0(0x36,0,32); /* CH-1,mode-3,low=0,high=32,cout=1K          */
_outpd(wPLX+0x4c,0x41); /* channel_1, interrupt active_Low             */
now_int_state=1;            /* now int_signal is High                  */
if (wIrq<8)
   {
   irqmask=inportb(A1_8259+1);
   outportb(A1_8259+1,irqmask & (0xff ^ (1 << wIrq)));
   setvect(wIrq+8, irq_service);
   }
else
   {
   irqmask=inportb(A1_8259+1);
   outportb(A1_8259+1,irqmask & 0xfb);                /* IRQ2 */
   outportb(A1_8259+1,irqmask & (0xff ^ (1 << wIrq)));
   irqmask=inportb(A2_8259+1);
   outportb(A2_8259+1,irqmask & (0xff ^ (1 << (wIrq-8))));
   setvect(wIrq-8+0x70, irq_service);
   }

enable();
}

void interrupt irq_service()
{
if (now_int_state==0)
   {
   COUNT3++;                          /* find a high_pulse              */
   if (COUNT3==2)                     /* start to down-count            */
      pci_tmc12_c1(0x70,0xff,0xff);   /* CH-2,mode-0 down count ffff */
   _outpd(wPLX+0x4c,0x41);            /* channel_1, interrupt active_Low */
   now_int_state=1;                   /* now int_signal is High         */
   }
```

```
else
  {
  COUNT3++;                          /* find a low_pulse                    */
  if (COUNT3==3)                     /* stop the down-count & read-count*/
    {
    outportb(wBaseAddr+0x0C,0x40); /* latch counter1          */
    CNT_L=inportb(wBaseAddr+0x04);
    CNT_H=inportb(wBaseAddr+0x04);
    _outpd(wPLX+0x4c,0);             /* disable all interrupt          */
    }
  else
    _outpd(wPLX+0x4c,0x43);        /* channel_1, interrupt active_High*/
  now_int_state=0;                 /* now int signal is Low       */
  }

if (wIrq>=8) outportb(A2_8259,0x20);
outportb(A1_8259,0x20);
}
```

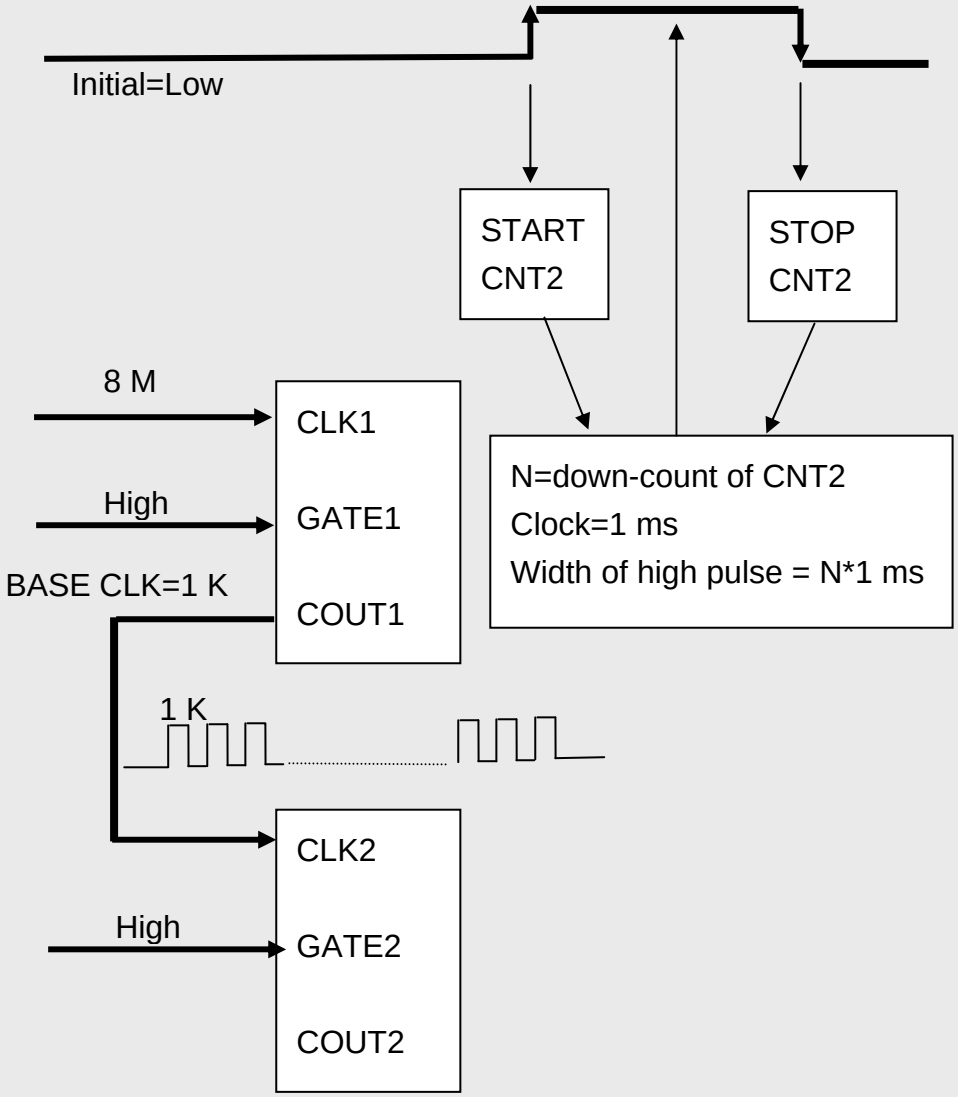

Refer to Sec. 3.3.5 for more information.

6.1.14 Ndemo1: Using LEDs

```
/* ------------------------------------------------------------------ */
/* ndemo1 : LED1, LED2, LED3 demo                                     */
/* step 1 : default shipping of PCI-TMC12A                            */
/* step 2 : run NDEMO1.EXE                                            */
/* step 3 : the LED1/2/3 of TMC12A will turn on sequentially          */
/* ------------------------------------------------------------------ */

#include "PCITMC12.H"
WORD pci_tmc12_do(WORD wDo);
WORD pci_tmc12_do2(WORD wXor);
WORD wBaseAddr,wIrq,wPLX;
int main()
{
int  i,j;
WORD wBoards,wRetVal;
char c;
clrscr();
wRetVal=PTMC12_DriverInit(&wBoards);
printf("\n(1) Threr are %d PCI-TMC12 Cards in this PC",wBoards);
if ( wBoards==0 )
   {
   putch(0x07);  putch(0x07);  putch(0x07);
   printf("(1) There are no PCI-TMC12 card in this PC !!!\n"); exit(0);
   }
printf("\n(2) Show the Configuration Space of all PCI-TMC12:");
for(i=0; i<wBoards; i++)
   {
   PTMC12_GetConfigAddressSpace(i,&wBaseAddr,&wIrq,&wPLX);
   printf("\n    Card_%d: wBaseAddr=%x, wIrq=%x,
wPLX=%x",i,wBaseAddr,wIrq,wPLX);
   }
PTMC12_GetConfigAddressSpace(0,&wBaseAddr,&wIrq,&wPLX); /*select card_0 */
printf("\n(3) *** Card_0 LED test, wBaseAddr=%x ***",wBaseAddr);
pci_tmc12_do2(0xe000); printf("\nAll LED off, press any key to continue");
getch();
pci_tmc12_do2(0xc000); printf("\nLED1 on,     press any key to continue");
getch();
pci_tmc12_do2(0xa000); printf("\nLED2 on,     press any key to continue");
getch();
pci_tmc12_do2(0x6000); printf("\nLED3 on,     press any key to continue");
getch();

PTMC12_DriverClose();
}

/* ------------------------------------------------------------ */
WORD pci_tmc12_do(WORD wDo)
{
outport(wBaseAddr+0x14,wDo);
return(NoError);
}

/* ------------------------------------------------------------ */
WORD pci_tmc12_do2(WORD wXor)
{
outport(wBaseAddr+0x18,wXor);
return(NoError);
}
```

6.1.15 Ndemo2: Generate 2 Clocks

```
/* ---------------------------------------------------------------- */
/* ndemo2 : generate 2 starting clock demo                          */
/* step 1 : all clock sources select external_clock                 */
/* step 2 : run NDEMO2.EXE                                          */
/* step 3 : read the counter value of counter1 to counter12        */
/* ---------------------------------------------------------------- */

#include "PCITMC12.H"

WORD wBaseAddr,wIrq,wPLX;
WORD pci_tmc12_do(WORD wDo);
WORD pci_tmc12_do2(WORD wXor);
WORD pci_tmc12_select8254(char cChip);
WORD pci_tmc12_c0(char cConfig, char cLow, char cHigh);
WORD pci_tmc12_c1(char cConfig, char cLow, char cHigh);
WORD pci_tmc12_c2(char cConfig, char cLow, char cHigh);
void read_c0(int B);
void read_c1(int B);
void read_c2(int B);

int main()
{
int  i,j;
WORD wBoards,wRetVal;
char c;

clrscr();
wRetVal=PTMC12_DriverInit(&wBoards);
printf("\n(1) Threr are %d PCI-TMC12 Cards in this PC",wBoards);
if ( wBoards==0 )
   {
   putch(0x07);  putch(0x07);  putch(0x07);
   printf("(1) There are no PCI-TMC12 card in this PC !!!\n"); exit(0);
   }

printf("\n(2) Show the Configuration Space of all PCI-TMC12:");
for(i=0; i<wBoards; i++)
   {
   PTMC12_GetConfigAddressSpace(i,&wBaseAddr,&wIrq,&wPLX);
   printf("\n    Card_%d: wBaseAddr=%x, wIrq=%x,
wPLX=%x",i,wBaseAddr,wIrq,wPLX);
   }

PTMC12_GetConfigAddressSpace(0,&wBaseAddr,&wIrq,&wPLX); /* select card_0 */
printf("\n(3) *** Card_0 LED test, wBaseAddr=%x ***",wBaseAddr);

/* initial count */

pci_tmc12_select8254(0);
pci_tmc12_c0(0x30,0xfe,0xff);
pci_tmc12_c1(0x70,0xfd,0xff);
pci_tmc12_c2(0xb0,0xfc,0xff);

pci_tmc12_select8254(1);
pci_tmc12_c0(0x30,0xfb,0xff);
pci_tmc12_c1(0x70,0xfa,0xff);
pci_tmc12_c2(0xb0,0xf9,0xff);
```

```
pci_tmc12_select8254(2);
pci_tmc12_c0(0x30,0xf8,0xff);
pci_tmc12_c1(0x70,0xf7,0xff);
pci_tmc12_c2(0xb0,0xf6,0xff);

pci_tmc12_select8254(3);
pci_tmc12_c0(0x30,0xf5,0xff);
pci_tmc12_c1(0x70,0xf4,0xff);
pci_tmc12_c2(0xb0,0xf3,0xff);

/* generate 2 starting clocks for all channels (Counter1~Counter12) */

delay(1);
pci_tmc12_do2(0);
pci_tmc12_do2(0x0fff);
pci_tmc12_do2(0);
pci_tmc12_do2(0x0fff);
pci_tmc12_do2(0);

for (;;)
   {
   pci_tmc12_select8254(0);
   read_c0(1);      /* Counter 1 */
   read_c1(2); /* Counter 2 */
   read_c2(3); /* Counter 3 */

   pci_tmc12_select8254(1);
   read_c0(4); /* Counter 4 */
   read_c1(5); /* Counter 5 */
   read_c2(6); /* Counter 6 */

   pci_tmc12_select8254(2);
   read_c0(7); /* Counter 7 */
   read_c1(8); /* Counter 8 */
   read_c2(9); /* Counter 9 */

   pci_tmc12_select8254(3);
   read_c0(10); /* Counter 10 */
   read_c1(11); /* Counter 11 */
   read_c2(12); /* Counter 12 */

   /* generate one clock to all channels for testing only */
   pci_tmc12_do2(0x0fff);
   pci_tmc12_do2(0);

   printf("\n------------------------");
   c=getch();
   if ((c=='q') || (c=='Q')) return;
   }

PTMC12_DriverClose();
}

/* ---------------------------------------------------------- */
WORD pci_tmc12_do(WORD wDo)
{
outport(wBaseAddr+0x14,wDo);
return(NoError);
}

/* ---------------------------------------------------------- */
WORD pci_tmc12_do2(WORD wXor)
{
outport(wBaseAddr+0x18,wXor);
return(NoError);
}
```

6.1.16 Ndemo3: New Demo7

```
/* ------------------------------------------------------------------- */
/* ndemo3 : watchdog timer using CH-3 (modified from demo7)   */
/*       (only add 2 lines to pre-set int_signal_to_PC)          */
/* step 1 : CLK-3 select clock2=80K                              */
/* step 2 : J25 select CH3                                       */
/* step 3 : run ndemo3.exe                                       */
/* ------------------------------------------------------------------- */

#include "PCITMC12.H"

#define A1_8259 0x20
#define A2_8259 0xA0
#define EOI   0x20

WORD pci_tmc12_select8254(char cChip);
WORD pci_tmc12_c0(char cConfig, char cLow, char cHigh);
WORD pci_tmc12_c1(char cConfig, char cLow, char cHigh);
WORD pci_tmc12_c2(char cConfig, char cLow, char cHigh);
WORD init_watchdog();
WORD wBaseAddr,wIrq,wPLX;

static void interrupt irq_service();
int watchdog,irqmask;

int main()
{
int  i,j;
WORD wBoards,wRetVal;
char c;
DWORD dwVal;

clrscr();
wRetVal=PTMC12_DriverInit(&wBoards);
printf("\n(1) Threr are %d PCI-TMC12 Cards in this PC",wBoards);
if ( wBoards==0 )
   {
   putch(0x07);  putch(0x07);  putch(0x07);
   printf("(1) There are no PCI-TMC12 card in this PC !!!\n"); exit(0);
   }

printf("\n(2) Show the Configuration Space of all PCI-TMC12:");
for(i=0; i<wBoards; i++)
   {
   PTMC12_GetConfigAddressSpace(i,&wBaseAddr,&wIrq,&wPLX);
   printf("\n    Card_%d: wBaseAddr=%x, wIrq=%x,
wPLX=%x",i,wBaseAddr,wIrq,wPLX);
   }

PTMC12_GetConfigAddressSpace(0,&wBaseAddr,&wIrq,&wPLX); /* select card_0 */
printf("\n(3) *** Card_0, wBaseAddr=%x ***",wBaseAddr);

watchdog=0;
pci_tmc12_select8254(0);          /* select 8254-chip-0          */
printf("\n(4) *** start refresh watchdog **\n");
init_watchdog();
```

```
for (;;)
   {
   refresh_watchdog();
   printf("\npress any key to simulate PC fail, watchdog=%d",watchdog);
   if (kbhit()!=0) {getch(); break;}
   }

printf("\nWait watchdog failure");
for (;;)
   {
   if (watchdog != 0)
      {
      printf("\nwatchdog is failure now");
      break;
      }
   if (kbhit()!=0) {getch(); break;}
   }

PTMC12_DriverClose();
_outpd(wPLX+0x4c,0); /* disable all interrupt */
}

/* ------------------------------------------------------------ */
WORD init_watchdog()
{
DWORD dwVal;

inport(wBaseAddr+0x18); /* pre-set int_signal_to_PC, added line 1 */
disable();
refresh_watchdog();
_outpd(wPLX+0x4c,0x41);  /* channel_1, interrupt active_Low */

if (wIrq<8)
   {
   irqmask=inportb(A1_8259+1);
   outportb(A1_8259+1,irqmask & (0xff ^ (1 << wIrq)));
   setvect(wIrq+8, irq_service);
   }
else
   {
   irqmask=inportb(A1_8259+1);
   outportb(A1_8259+1,irqmask & 0xfb);              /* IRQ2 */
   outportb(A1_8259+1,irqmask & (0xff ^ (1 << wIrq)));
   irqmask=inportb(A2_8259+1);
   outportb(A2_8259+1,irqmask & (0xff ^ (1 << (wIrq-8))));
   setvect(wIrq-8+0x70, irq_service);
   }

enable();
}

/* 80K*65536_count=0.8192 sec --> high_width=0.4096 sec    */
/* --> the user has to refresh the watchdog before 0.4 sec */
refresh_watchdog()
{
pci_tmc12_c2(0xb6,0xff,0xff);          /* mode_3, CNT2--> CH3        */
return(NoError);
}

void interrupt irq_service()
{
watchdog++;
inport(wBaseAddr+0x18); /* pre-set int_signal_to_PC, added line 2 */
if (wIrq>=8) outportb(A2_8259,0x20);
outportb(A1_8259,0x20);}
```

6.1.17 Ndemo4: Active High Int

```
/* ------------------------------------------------------------------------ */
/* ndemo4 : interrupt demo, int source=initial low, active High          */
/* step 1 : connect DO1 (pin1 of CON3) to ECLK11 (pin16 of CON1) */
/* step 2 : J25 select EXT                                                */
/* step 3 : run ndemo4.exe                                                */
/* step 4 : press any key to test, press Q to stop                        */
/* ------------------------------------------------------------------------ */

#include "PCITMC12.H"

#define A1_8259 0x20
#define A2_8259 0xA0
#define EOI   0x20

WORD pci_tmc12_do(WORD wDo);
WORD pci_tmc12_do2(WORD wDo);
WORD init_interrupt();
WORD wBaseAddr,wIrq,wPLX,int_count;

static void interrupt irq_service();
int irqmask;

int main()
{
int  i,j;
WORD wBoards,wRetVal,old_count;
char c;
DWORD dwVal;

clrscr();
wRetVal=PTMC12_DriverInit(&wBoards);
printf("\n(1) Threr are %d PCI-TMC12 Cards in this PC",wBoards);
if ( wBoards==0 )
   {
   putch(0x07);  putch(0x07);  putch(0x07);
   printf("(1) There are no PCI-TMC12 card in this PC !!!\n"); exit(0);
   }

printf("\n(2) Show the Configuration Space of all PCI-TMC12:");
for(i=0; i<wBoards; i++)
   {
   PTMC12_GetConfigAddressSpace(i,&wBaseAddr,&wIrq,&wPLX);
   printf("\n    Card_%d: wBaseAddr=%x, wIrq=%x,
wPLX=%x",i,wBaseAddr,wIrq,wPLX);
   }

PTMC12_GetConfigAddressSpace(0,&wBaseAddr,&wIrq,&wPLX); /* select card_0 */
printf("\n(3) *** Card_0, wBaseAddr=%x ***",wBaseAddr);

printf("\n(4) *** start test interrupt   **\n");

pci_tmc12_do(0); /* DO1=int source --> initial low, active High */

init_interrupt();
old_count=1;
```

```
for (;;)
   {
   if (old_count != int_count)
      {
      printf("\nint_High_count=%d",int_count);
      old_count=int_count;
      }

   if (kbhit()!=0)
      {
      c=getch();
      if ((c=='q') || (c=='Q')) break;
      pci_tmc12_do(1); /* generate a High pulse to  */
      pci_tmc12_do(0); /* DO1=ECLK11=J25=int source */
      printf(" --> Generate a High interrupt pulse");
      }
   }

PTMC12_DriverClose();
_outpd(wPLX+0x4c,0); /* disable all interrupt */
}
/* ------------------------------------------------------------ */

WORD init_interrupt()
{
DWORD dwVal;

int_count=0;
pci_tmc12_do2(0);      /* set IntXor OFF to non-invert the int source */
inport(wBaseAddr+0x18); /* pre-set int_signal_to_PC to High value  */
                        /* to enable next interrupt operation     */

disable();

_outpd(wPLX+0x4c,0x41);   /* channel_1, interrupt active_Low         */

if (wIrq<8)
   {
   irqmask=inportb(A1_8259+1);
   outportb(A1_8259+1,irqmask & (0xff ^ (1 << wIrq)));
   setvect(wIrq+8, irq_service);
   }
else
   {
   irqmask=inportb(A1_8259+1);
   outportb(A1_8259+1,irqmask & 0xfb);              /* IRQ2 */
   outportb(A1_8259+1,irqmask & (0xff ^ (1 << wIrq)));
   irqmask=inportb(A2_8259+1);
   outportb(A2_8259+1,irqmask & (0xff ^ (1 << (wIrq-8))));
   setvect(wIrq-8+0x70, irq_service);
   }

enable();
}

void interrupt irq_service()
{
/* now the int_signal_to_PC is in Low state */
inport(wBaseAddr+0x18);    /* pre-set int_signal_to_PC to High value */
                           /* to enable next interrupt operation     */
int_count++;
if (wIrq>=8) outportb(A2_8259,0x20);
outportb(A1_8259,0x20);
}
```

6.1.18 Ndemo5: Active Low Int

```
/* ------------------------------------------------------------------------ */
/* ndemo5 : interrupt demo, int source=initial High, active Low          */
/* step 1 : connect DO1 (pin1 of CON3) to ECLK11 (pin16 of CON1) */
/* step 2 : J25 select EXT                                                */
/* step 3 : run ndemo5.exe                                                */
/* step 4 : press any key to test, press Q to stop                        */
/* ------------------------------------------------------------------------ */

#include "PCITMC12.H"

#define A1_8259 0x20
#define A2_8259 0xA0
#define EOI   0x20

WORD pci_tmc12_do(WORD wDo);
WORD pci_tmc12_do2(WORD wDo);
WORD init_interrupt();
WORD wBaseAddr,wIrq,wPLX,int_count;

static void interrupt irq_service();
int irqmask;

int main()
{
int  i,j;
WORD wBoards,wRetVal,old_count;
char c;
DWORD dwVal;

clrscr();
wRetVal=PTMC12_DriverInit(&wBoards);
printf("\n(1) Threr are %d PCI-TMC12 Cards in this PC",wBoards);
if ( wBoards==0 )
   {
   putch(0x07);  putch(0x07);  putch(0x07);
   printf("(1) There are no PCI-TMC12 card in this PC !!!\n"); exit(0);
   }

printf("\n(2) Show the Configuration Space of all PCI-TMC12:");
for(i=0; i<wBoards; i++)
   {
   PTMC12_GetConfigAddressSpace(i,&wBaseAddr,&wIrq,&wPLX);
   printf("\n    Card_%d: wBaseAddr=%x, wIrq=%x,
wPLX=%x",i,wBaseAddr,wIrq,wPLX);
   }

PTMC12_GetConfigAddressSpace(0,&wBaseAddr,&wIrq,&wPLX); /* select card_0 */
printf("\n(3) *** Card_0, wBaseAddr=%x ***",wBaseAddr);

printf("\n(4) *** start test interrupt   **\n");

pci_tmc12_do(1); /* DO1=int source --> initial High, active Low */

init_interrupt();
old_count=1;
```

```
for (;;)
   {
   if (old_count != int_count)
      {
      printf("\nint_count=%d",int_count);
      old_count=int_count;
      }

   if (kbhit()!=0)
      {
      c=getch();
      if ((c=='q') || (c=='Q')) break;
      pci_tmc12_do(0); /* generate a Low  pulse to  */
      pci_tmc12_do(1); /* DO1=ECLK11=J25=int source */
      printf(" --> Generate a Low interrupt pulse");
      }
   }

PTMC12_DriverClose();
_outpd(wPLX+0x4c,0); /* disable all interrupt */
}

/* ------------------------------------------------------------ */

WORD init_interrupt()
{
DWORD dwVal;

int_count=0;
pci_tmc12_do2(0x1000); /* set IntXor On to invert the int source */
inport(wBaseAddr+0x18);/* pre-set int_signal_to_PC to High value */
                       /* to enable next interrupt operation     */
disable();

_outpd(wPLX+0x4c,0x41);  /* channel_1, interrupt active_Low */

if (wIrq<8)
  {
  irqmask=inportb(A1_8259+1);
  outportb(A1_8259+1,irqmask & (0xff ^ (1 << wIrq)));
  setvect(wIrq+8, irq_service);
  }
else
  {
  irqmask=inportb(A1_8259+1);
  outportb(A1_8259+1,irqmask & 0xfb);              /* IRQ2 */
  outportb(A1_8259+1,irqmask & (0xff ^ (1 << wIrq)));
  irqmask=inportb(A2_8259+1);
  outportb(A2_8259+1,irqmask & (0xff ^ (1 << (wIrq-8))));
  setvect(wIrq-8+0x70, irq_service);
  }

enable();
}

void interrupt irq_service()
{
/* now the int_signal_to_PC is in Low state */
inport(wBaseAddr+0x18); /* pre-set int_signal_to_pc to High value */
                        /* to enable next interrupt operation     */
int_count++;
if (wIrq>=8) outportb(A2_8259,0x20);
outportb(A1_8259,0x20);
}
```

6.2 Demo Programs for Windows

Please note that none of the demo programs will work normally if the DLL driver has not been installed correctly. During the DLL driver installation process, the install shield will register the correct kernel driver to the operating system and copy the DLL driver and demo programs to the correct location depending on the driver software package you have selected (Win98/ME/NT/2K and 32-bit Win XP/2003/Visa/7). After installing the driver, the related demo programs, development library and declaration header files for the different development environments will be available in the following folders.

The demo program is contained in:

CD:\NAPDOS\PCI\PCI-TMC12A\DLL_OCX\Demo\

http://ftp.icpdas.com/pub/cd/iocard/pci/napdos/pci/pci-tmc12a/dll_ocx/demo/

- BCB 4 → for Borland C++ Builder 4
  PCITMC12.H → Header files
  PCITMC12.LIB → Linkage library for BCB only

- Delphi4 → for Delphi 4
  PCI-TMC12.PAS → Declaration files

- VB6 → for Visual Basic 6
  PCITMC12.BAS → Declaration files

- VC6 → for Visual C++ 6
  PCITMC12.H → Header files
  PCITMC12.LIB → Linkage library for VC6 only

- VB.NET2005 → for VB.NET2005
  PCITMC12.vb → Visual Basic Source files

- CSharp2005 → for C#.NET2005
  PCITMC12.cs → Visual C# Source files

6.3 PIO_PISO.EXE for Windows

The PIO_PISO.exe utility is located on the CD as below and is useful for all PIO/PISO series cards.
CD:\NAPDOS\PCI\Utility\Win32\PIO_PISO\
http://ftp.icpdas.com/pub/cd/iocard/pci/napdos/pci/utility/win32/pio_piso/

After executing the utility, detailed information for all PIO/PISO cards that are installed in the PC will be shown, as illustrated below:

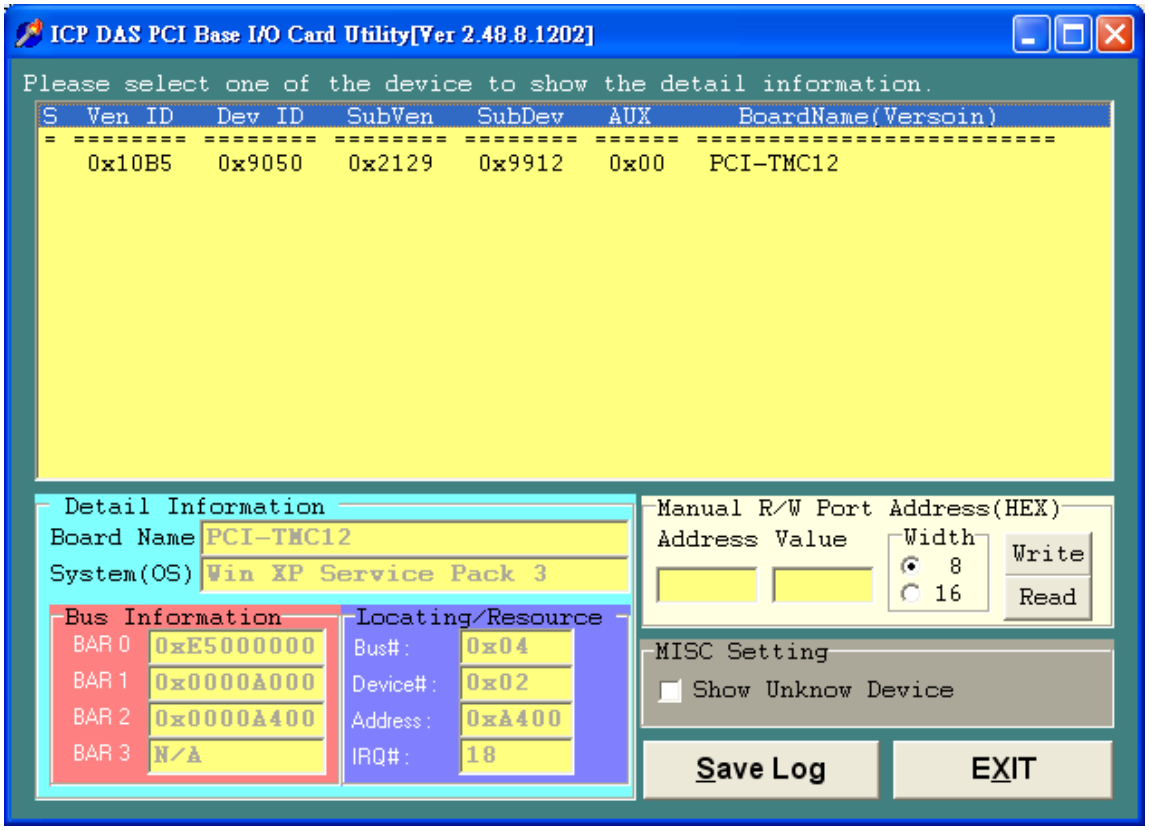

Note: The PIO_PISO.EXE application is valid for all PIO/PISO cards. The user can execute the PIO_PISO.EXE file to retrieve the following information:

- List all PIO/PISO cards installed in the PC
- List the resources allocated to each PIO/PISO card
- List the wSlotBus and wSlotDevice details for identification of specific PIO/PISO cards. (Refer to Sec. 3.1 for more information)

PCI-TMC12 Series

Software Manual

[ver. 2.1, Apr. 2011]

Warranty

All products manufactured by ICP DAS are warranted against defective materials for a period of one year from the date of delivery to the original purchaser.

Warning

ICP DAS assumes no liability for damages consequent to the use of this product. ICP DAS reserves the right to change this manual at any time without notice. The information furnished by ICP DAS is believed to be accurate and reliable. However, no responsibility is assumed by ICP DAS for its use, nor for any infringements of patents or other rights of third parties resulting from its use.

Copyright

Trademark

Names are used for identification only and may be registered trademarks of their respective companies.

Table of Contents

1. Introduction

There are many demo program, written in VB, VC, Delphi, Borland C++ Builder, VB.NET, VC.NET and C# given in the companion CD. These demo programs will call the PCITMC12.DLL to access the hardware of PCI-TMC12. The PCITMC12.DLL will call the kernel driver, Windrvr.vxd or Windrvr.sys as follows:

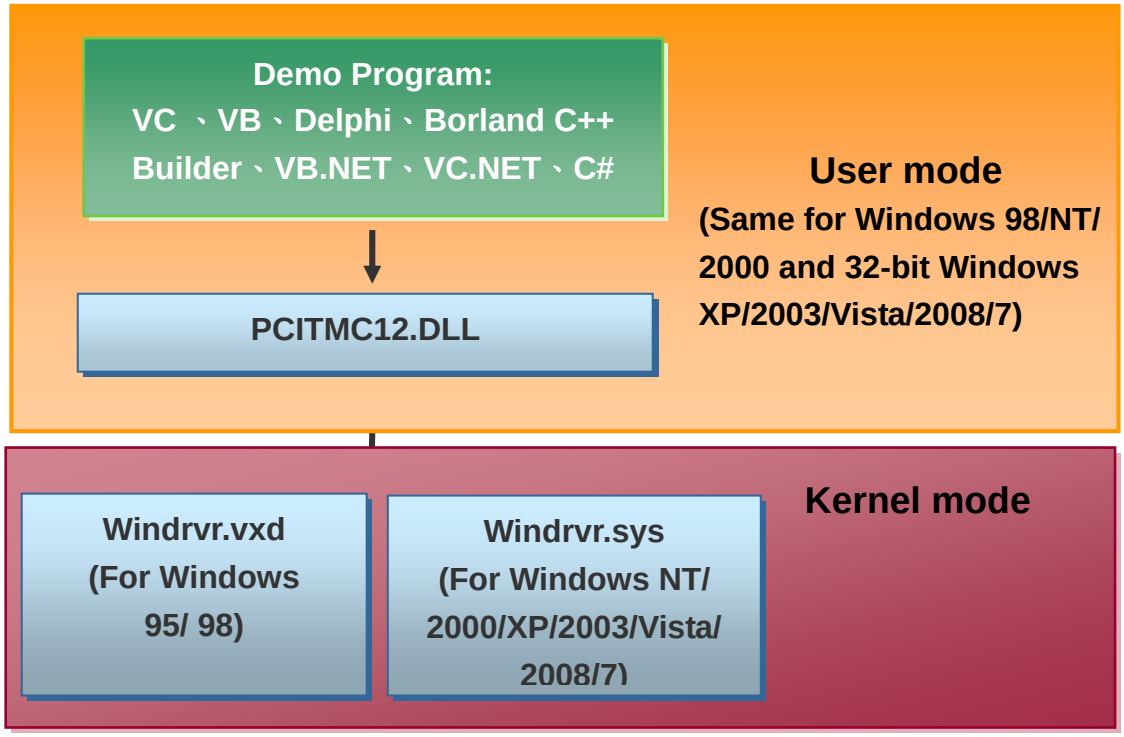

The install shields will install kernel driver, DLL driver & application demo program to system. **All demo program & DLL are same for Windows 95/98/NT/2000 and 32-bit Windows XP/2003/Vista/7**. But the kernel driver is different for different system as follows:

- For Windows 95/98 → will copy **WINDRVR.VXD** to C:\WIN95\SYSTEM\VMM32
- For Windows NT → will copy **WINDRVR.SYS** to C:\WINNT\SYSTEM32\DRIVERS
- For Windows 2000/XP/2003/Vista/2008/7 (32-bit) → will copy **WINDRVR.SYS** to C:\WINDOWS\SYSTEM32\DRIVERS

All DLL and demo program will not work if the kernel driver is not installed correctly. The install shields will copy the correct kernel driver to correct position if you select correct O.S. (Window 95/98/NT/2000/XP/2003/Vista/7).

The install shields also copy all related documentations of PCI-TMC12 series to user's hard disk. Refer to **Calling DLL functions in VB、VC、Delphi、BCB.pdf** (http://ftp.icpdas.com/pub/cd/iocard/pci/napdos/pci/manual/) for more information about how to call the DLL functions with VB, VC, Delphi, Borland C++ Builder, VB.NET, VC.NET and C#.

The software architecture is given as follows:

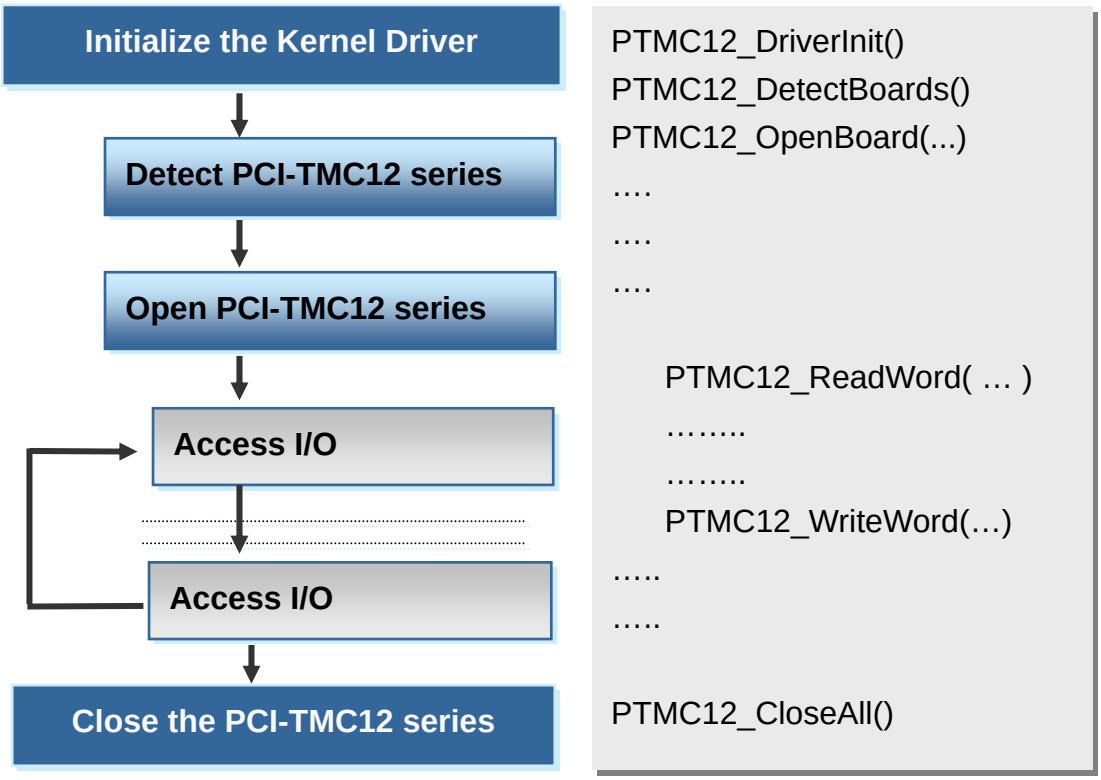

Note:

1. PCI-TMC12 series maybe PCI-TMC12 or PCI-TMC12A. Refer to Sec. 3.4 of "PCI-TMC12(A) User's Manual" (CD: \NAPDOS\PCI\PCI-TMC12A\Manual\) for comparison of TMC12 and TMC12A.
2. PTMC12.DLL is designed for PCI-TMC12.
3. If J28 of PCI-TMC12A is set to TMC12, this PCI-TMC12A can use PTMC12.DLL as same as PCI-TMC12.

1.1 Reference

Please refer to the following user manuals:

- **PnP Driver Installation.pdf:**
  Describes how to install the PnP (Plug and Play) driver for PCI card under Windows 95/98/2000/XP/2003/Vista/7(32-bit).
  http://ftp.icpdas.com/pub/cd/iocard/pci/napdos/pci/manual/

- **Software Installation Guide.pdf:**
  Describes how to install the software package under Windows 95/98/ 2000/XP/2003/Vista/2008/7(32-bit).
  http://ftp.icpdas.com/pub/cd/iocard/pci/napdos/pci/manual/

- **Calling DLL Functions.pdf:**
  Describes how to call the DLL functions with VC++6, VB6, Delphi4 and Borland C++ Builder 4.
  http://ftp.icpdas.com/pub/cd/iocard/pci/napdos/pci/manual/

- **Resource Checking .pdf:**
  Describes how to check the resources I/O Port address, IRQ number and DMA number for add-on cards under Windows 95/98/2000/XP/2003/ Vista/2008/7(32-bit).
  http://ftp.icpdas.com/pub/cd/iocard/pci/napdos/pci/manual/

- **PCI-TMC12 Hardware manual.pdf:**
  PCI-TMC12 series hardware manual.
  http://ftp.icpdas.com/pub/cd/iocard/pci/napdos/pci/pci-tmc12a/manual/

1.2 Declaration Files

After the drivers are installed, the relevant demo programs, development libraries and declaration header files for the different development environments will be available in the following locations.

For detailed PCI-TMC12 series Windows driver installed information, please refer to Quick Start Guide.
CD:\NAPDOS\PCI\PCI-TMC12A\Manual \QuickStart\
http://ftp.icpdas.com/pub/cd/iocard/pci/napdos/pci/pci-tmc12a/manual/quickstart/

The demo program is contained in:
CD:\NAPDOS\PCI\PCI-TMC12A\DLL_OCX\Demo\
http://ftp.icpdas.com/pub/cd/iocard/pci/napdos/pci/pci-tmc12a/dll_ocx/demo/

- BCB 4 → for Borland C++ Builder 4
  PCITMC12.H → Header files
  PCITMC12.LIB → Linkage library for BCB only
- Delphi4 → for Delphi 4
  PCI-TMC12.PAS → Declaration files
- VB6 → for Visual Basic 6
  PCITMC12.BAS → Declaration files
- VC6 → for Visual C++ 6
  PCITMC12.H → Header files
  PCITMC12.LIB → Linkage library for VC6 only
- VB.NET2005 → for VB.NET2005
  PCITMC12.vb → Visual Basic Source files
- CSharp2005 → for C#.NET2005
  PCITMC12.cs → Visual C# Source files

2. Function Descriptions

In order to simplify and clarify the description, the attribute of the input and output parameters of the function is indicated as [input] and [output], respectively, as shown in the following table.

Keyword	Parameter must be set by the user before calling the function	Data/value from this parameter is retrieved after calling the function
[Input]	**Yes**	No
[Output]	No	**Yes**
[Input, Output]	**Yes**	**Yes**

Note: All of the parameters need to be allocated spaces by the user.

The return codes of DLLs are defined as follows:

// return code

Error Code	Error ID	Error Code	Error ID
0	PCI_NoError	16	PCI_BoardIsNotOpen
1	PCI_DriverOpenError	17	PCI_BoardOpenError
2	PCI_DriverNoOpen	18	PCI_BoardNoIsZero
3	PCI_GetDriverVersionError	19	PCI_BoardNoExceedFindBoards
4	PCI_InstallIrqError	20	PCI_InputParameterError
5	PCI_ClearIntCountError	21	PCI_IntInitialStateError
6	PCI_GetIntCountError	22	PCI_IntInitialValueError
7	PCI_RegisterApcError	23	PCI_TimeOut
8	PCI_RemoveIrqError		
9	PCI_FindBoardError		
10	PCI_ExceedBoardNumber		
11	PCI_ResetError		
12	PCI_IrqMaskError		
13	PCI_ActiveModeError		
14	PCI_GetActiveFlagError		
15	PCI_ActiveFlagEndOfQueue		

The defined DLL are given as follows:

Reference	Function Definition
Sec. 2.1	**Functions of Test**
Sec. 2.1.1	float PTMC12_FloatSub(float fA, float fB);
Sec. 2.1.2	short PTMC12_ShortSub(short nA, short nB);
Sec. 2.1.3	int PTMC12_IntSub(int iA, int iB);
Sec. 2.1.4	DWORD PTMC12_GetDllVersion(void);
Sec. 2.2	**Functions of Driver Initialization**
Sec. 2.2.1	DWORD PTMC12_DriverInit(void);
Sec. 2.2.2	DWORD PTMC12_DetectBoards(void);
Sec. 2.2.3	DWORD PTMC12_OpenBoard(DWORD dwBoardNo, DWORD dwInEnable);
Sec. 2.2.4	DWORD PTMC12_ReadBoardStatus(DWORD dwBoardNo);
Sec. 2.2.5	DWORD PTMC12_ReadId(DWORD dwBoardNo, DWORD *dwVendorId, DWORD *dwDeviceId, DWORD *dwSubVendorId, DWORD *dwSubDeviceId);
Sec. 2.2.6	DWORD PTMC12_CloseBoard(dwBoardNo);
Sec. 2.2.7	void PTMC12_CloseAll(void);
Sec. 2.3	**Functions of Read/Write to PCI-TMC12 series**
Sec. 2.3.1	WORD PTMC12_WriteByte(WORD dwBoardNo, DWORD dwOffse, BYTE Data);
Sec. 2.3.2	DWORD PTMC12_WriteWord(DWORD dwBoardNo, DWORD dwOffse, WORD Data);
Sec. 2.3.3	DWORD PTMC12_ReadByte(DWORD dwBoardNo, DWORD dwOffset, BYTE *Data);
Sec. 2.3.4	DWORD PTMC12_ReadWord(DWORD dwBoardNo, DWORD dwOffse, WORD *Data);
Sec. 2.4	**Functions of interrupt**
Sec. 2.4.1	DWORD PTMC12_InstallCallbackFunc(DWORD dwBoardNo, DWORD dwInitialState, void (* addrCallBackFunc)());
Sec. 2.4.2	DWORD PTMC12_RemoveAllCallBackFunc(void);
Sec. 2.4.3	DWORD PTMC12_EnableInt(DWORD dwBoardNo);
Sec. 2.4.4	DWORD PTMC12_DisableInt(DWORD dwBoardNo);
Sec. 2.4.5	WORD PTMC12_WriteCounter(DWORD dwBoardNo, BYTE Counter, BYTE Mode, DWORD Data);
Sec. 2.4.6	WORD PTMC12_ReadCounter(DWORD dwBoardNo, BYTE Counter, DWORD *Data);
Sec. 2.5	**Functions of read/Write to PCI Controller**
Sec. 2.5.1	DWORD PTMC12_WritePciDWord(DWORD dwBoardNo, WORD Data);
Sec. 2.5.2	DWORD PTMC12_ReadPciDword(DWORD dwBoardNo, WORD *Data);

2.1 Functions of Test

2.1.1 PTMC12_FloatSub

- **Description:**
  This function is used to perform the subtraction (as fA - fB in float data type), and is provided for testing DLL linkage purposes.

- **Syntax:**
  float **PTMC12_FloatSub**(float **fA**, float **fB**)

- **Parameters:**

fA	[Input]	4 bytes floating point value
fB	[Input]	4 bytes floating point value

- **Returns:**
  The value of fA - fB

2.1.2 PTMC12_ShortSub

- **Description:**
  This function is used to perform the subtraction (as nA - nB in short data type), and is provided for testing DLL linkage purposes.

- **Syntax:**
  short **PTMC12_ShortSub**(short **nA**, short **nB**)

- **Parameters:**

nA	[Input]	2 bytes short data type value
nB	[Input]	2 bytes short data type value

- **Returns:**
  The value of nA – nB

2.1.3 PTMC12_IntSub

- **Description:**
  This function is used to perform the subtraction (as iA - iB in int data type), and is provided for testing DLL linkage purposes.

- **Syntax:**
  float **PTMC12_IntSub**(int **fA**, int **fB**)

- **Parameters:**

iA	[Input]	4 bytes int data value
iB	[Input]	4 bytes int data value

- **Returns:**
  The value of iA – iB

2.1.4 PTMC12_GetDllVersion

- **Description:**
  This functions is used to retrieve the version number of the PTMC12.DLL driver

- **Syntax:**
  WORD **PTMC12_GetDllVersion**(Void)

- **Parameters:**
  None

- **Returns:**
  Return the DLL's version number.
  For example: 102 (hex) for version 1.02

2.2 Functions of Driver Initialization

2.2.1 PTMC12_DriverInit

- **Description:**
  This function is used to initialize the kernel driver. This function must be called first before calling these DLL functions given in Sec. 2.2 ~ Sec. 2.4.

- **Syntax:**
  DWORD **PTMC12_DriverInit**();

- **Parameters:**
  Void

- **Returns:**
  PCI_NoError: OK
  PCI_DriverOpenError: Open kernel driver error

2.2.2 PTMC12_DetectBoards

- **Description:**
  This function is used to detect all installed PCI-TMC12 series boards.

- **Syntax:**
  WORD **PTMC12_DetectBoards**();

- **Parameters :**
  void

- **Returns:**
  0: No PCI-TMC12 series is installed in this PC
  1: Only one PCI-TMC12 series is installed in this PC (Board no. = 1)
  N: Number of PCI-TMC12 series in stalled in this PC (Board no. = 1, 2,...,N)

Note: Call PTMC12_DriverInit() before calling this function

2.2.3 PTMC12_OpenBoard

- **Description:**
  This function is used to lock the PCI-TMC12 series. Then the locked PCI-TMC12 series is dedicated to this program until PTMC12_CloseBoard is called. This function must be called first before calling these DLL functions given in Sec. 2.2 ~Sec. 2.4.

- **Syntax:**
  DWORD **PTMC12_OpenBoard**(**dwBoardNo**, **dwIntEnable**);

- **Parameters:**

dwBoardNo	[Input]	Board number 1, 2, ...
dwIntEnable	[Input]	0 = no interrupt, 1 = using interrupt

- **Returns:**
  PCI_NoError: OK
  PCI_BoardOpenError: Open PCI-TMC12 series error (May be locked by others)
  PCI_BoardNoExceedFindBoards: dwBoardNo > N

Note: 1. Call PTMC12_DriverInit() before calling this function
2. Call PTMC12_DetectCards() to detect all PCI-TMC12 series.

2.2.4 PTMC12_ReadBoardStatus

- **Description:**
  This function is used to show the lock-status of the PCI-TMC12 series board.

- **Syntax:**
  DWORD **PTMC12_ReadBoardStatus**(**dwBoardNo**);

- **Parameters:**

dwBoardNo	[Input]	PCI-TMC12 series board number

- **Returns:**
  0: This PCI-TMC12 series is not locked by other program.
  1: This PCI-TMC12 series is locked by other program.

Note: 1. Call PTMC12_DriverInit() before calling this function
2. Call PTMC12_DetectBoards() to detect all PCI-TMC12.
3. Call PTMC12_OpenBoard() to lock the target PCI-TMC12 . Then the locked PCI-TMC12 is dedicated to this program.
4. Call PTMC12_CloseBoard() to un-lock the target PCI-TMC12. Then other program can call PTMC12_Openboard() to lock this PCI_TMC12 boards.

2.2.5 PTMC12_ReadId

- **Description:**
  This function is used to show the Ids of detected PCI-TMC12 series board.

- **Syntax:**
  DWORD **PTMC12_ReadId**(**dwBoardNo**, ***dwVendorId, *dwDeviceId, *dwSubVendorId, *dwSubdeviceId**);

- **Parameters:**

dwBoardNo	[Input]	Board number 1, 2, ...
dwVendorID	[Output]	Vendor ID of this board
dwDeviceID	[Output]	Device ID of this board
dwSubVendorID	[Output]	Sub-Vendor ID of this board
dwSubDeviceID	[Output]	Sub-Device ID of this board

- **Returns:**
  0: this is a valid board no → all return Ids are valid
  Others: this is not a valid board no → all return Ids are invalid

2.2.6 PTMC12_CloseBoard

- **Description:**
  This function is used to unlock the PCI-TMC12 series board, then other program can use this PCI-TMC12 series now.

- **Syntax:**
  DWORD **PTMC12_CloseBoard**(**dwBoardNo**);

- **Parameters:**

dwBoardNo	[Input]	Board number 1, 2, ...

- **Returns:**
  PCI-NoError: OK
  PCI-BoardIsNotOpen: This PCI-TMC12 series is not locked by others
  PCI-BoardNoExceedFindBoards: dwBoardNo > available board number

Note: 1. Call PTMC12_DriverInit() before calling this function
2. Call PTMC12_DetectBoards() to detect all PCI-TMC12 boards
3. Call PTMC12_OpenBoard() before calling this function

2.2.7 PTMC12_CloseAll

- **Description:**
  This function is used to unlock all PCI-TMC12 series board installed in this PC, then other program can use these PCI-TMC12 series now.

- **Syntax:**
  DWORD **PTMC12_CloseAll**();

- **Parameters:**
  Void

- **Returns:**
  PCI-NoError: OK
  PCI-BoardIsNotOpen: This PCI-TMC12 series is not locked by others
  PCI-BoardNoExceedFindBoards: dwBoardNo > available board number

Note: 1. Call PTMC12_DriverInit() before calling this function

2. Call PTMC12_DetectBoards() to detect all PCI-TMC12 boards

3. Call PTMC12_OpenBoard() before calling this function

2.3 Read / Write to PCI-TMC12(A)

2.3.1 PTMC12_WriteByte

- **Description:**
  Write one byte (8-bit) of data to PCI-TMC12 series.

- **Syntax:**
  WORD **PTMC12_WriteByte**(**dwBoardNo, dwOffse, Data**);

- **Parameters:**

dwBoardNo	[Input]	Board number (From 1 to N)
dwOffset	[Input]	Offset address
Data	[Input]	One byte of data (8-bit)

- **Returns:**
  0: Write OK
  PCI_DriverNoOpen: Kernel driver no find
  PCI_BoardNoIsZero: dwBoardNo is 0, it must be in the range of 1~N
  PCI_BoardNoExceedFindBoards: dwBoardNo >N

Note:
1. **Call PTMC12_DetectCards() before calling this function**
2. **Call PTMC12_DetectBoards() to detect all PCI-TMC12 boards**
3. **Call PTMC12_OpenBoard() before calling this function**
4. **PTMC12_WriteByte(dwBoardNo, 0x10, Data) → select the active 8254, refer to Sec. 3.3.1 of "PCI-TMC12(A) User's Manual"**
5. **PTMC12_WriteByte(dwBoardNo, 0x14, Data) → Write to D/O0~7, refer to Sec. 3.3.4 of "PCI-TMc12(A) User's Manual"**

2.3.2 PCITMC12_WriteWord

- **Description:**
  Write one word (16-bit) of data to PCI-TMC12 series.

- **Syntax:**
  DWORD **PTMC12_WriteWord(dwBoardNo, dwOffset, Data)**;

- **Parameters:**

dwBoardNo	[Input]	Board number (From 1 to N)
dwOffset	[Input]	Offset address
Data	[Input]	One word of data (16-bit)

- **Returns:**
  0: Write OK
  PCI_DriverNoOpen: Kernel driver no find
  PCI_BoardNoIsZero: dwBoardNo is 0, it must be in the range of 1~N
  PCI_BoardNoExceedFindBoards: dwBoardNo >N

Note:
1. **Call PTMC12_DetectCards() before calling this function**
2. **Call PTMC12_DetectBoards() to detect all PCI-TMC12 boards**
3. **Call PTMC12_OpenBoard() before calling this function**
4. **PTMC12_WriteByte(dwBoardNo, 0x10, Data) → select the active 8254, refer to Sec. 3.3.1 of "PCI-TMC12(A) User's Manual"**
5. **PTMC12_WriteWord(dwBoardNo, 0x14, Data) → Write to D/O0~15, refer to Sec. 3.3.4 of "PCI-TMc12(A) User's Manual"**

2.3.3 PTMC12_ReadByte

- **Description:**
  Read one byte (8-bit) of data from PCI-TMC12 series.

- **Syntax:**
  DWORD **PICITMC12_ReadByte**(**dwBoardNo**, **dwOffset, *Data**);

- **Parameters:**

dwBoardNo	[Input]	Board number (From 1 to N)
dwOffset	[Input]	Offset address
Data	[Input]	One byte of data (8-bit)

- **Returns:**
  0: Write OK
  PCI_DriverNoOpen: Kernel driver no find
  PCI_BoardNoIsZero: dwBoardNo is 0, it must be in the range of 1~N
  PCI_BoardNoExceedFindBoards: dwBoardNo >N

Note:
1. **Call PTMC12_DetectCards() before calling this function**
2. **Call PTMC12_DetectBoards() to detect all PCI-TMC12 boards**
3. **Call PTMC12_OpenBoard() before calling this function**
4. **PTMC12_ReadByte(dwBoardNo, 0x14, Data) → Read to D/O0~7, refer to Sec. 3.3.3 of "PCI-TMc12(A) User's Manual"**

2.3.4 PTMC12_ReadWord

- **Description:**
  Read one word (16-bit) of data from PCI-TMC12 series.

- **Syntax:**
  DWORD **PCITMC12_ReadWord**(**dwBoardNo, dwOffse, *Data**);

- **Parameters:**

dwBoardNo	[Input]	Board number (From 1 to N)
dwOffset	[Input]	Offset address
Data	[Input]	One word of data (16-bit)

- **Returns:**
  0: Write OK
  PCI_DriverNoOpen: Kernel driver no find
  PCI_BoardNoIsZero: dwBoardNo is 0, it must be in the range of 1~N
  PCI_BoardNoExceedFindBoards: dwBoardNo >N

Note: **1. Call PTMC12_DetectCards() before calling this function**
2. Call PTMC12_DetectBoards() to detect all PCI-TMC12 boards
3. Call PTMC12_OpenBoard() before calling this function
4. PTMC12_ReadWord(dwBoardNo, 0x14, Data) → Read to D/O0~15, refer to Sec. 3.3.3 of "PCI-TMc12(A) User's Manual"

2.4 Interrupt Related DLLs

2.4.1 PTMC12_InstallCallBackFunc

- **Description:**
  Install user's call back function to driver. So if the interrupt signal is active, driver will call this function once.

- **Syntax:**
  DWORD **PTMC12_InstallCallBackFunc**(**dwBoardNo**, **dwIntType**, **user_function()**);

- **Parameters:**

dwBoardNo	[Input]	Board number (From 1 to N)
dwIntType	[Input]	1=initial low and active high 2=initial high and active low
user_function()	[Input]	Address of user's call back function

- **Returns:**
  0: Write OK
  PCI_DriverNoOpen: Kernel driver no find
  PCI_BoardNoIsZero: dwBoardNo is 0, it must be in the range of 1~N
  PCI_BoardNoExeccdFindBoards: dwBoardNo > N

Note: 1. Call PTMC12_DetectCards() before calling this function
2. Call PTMC12_DetectBoards() to detect all PCI-TMC12 boards
3. Call PTMC12_OpenBoard() before calling this function

2.4.2 PTMC12_RemoveAllCallBackFunc

- **Description:**
  Disable interrupt and call back functions of all. PCI-TMC12 series installed in this PC.

- **Syntax:**
  DWORD **PTMC12_RemoveAllCallBackFunc**();

- **Parameters:**
  Void

- **Returns:**
  0: Write OK
  PCI_DriverNoOpen: Kernel driver no find
  PCI_BoardNoIsZero: dwBoardNo is 0, it must be in the range of 1~N
  PCI_BoardNoExeccdFindBoards: dwBoardNo > N

Note: 1. Call PTMC12_DetectCards() before calling this function
2. Call PTMC12_DetectBoards() to detect all PCI-TMC12 boards
3. Call PTMC12_OpenBoard() before calling this function

2.4.3 PTMC12_EnableInt

- **Description:**
  Enable interrupt of PCI-TMC12 series.

- **Syntax:**
  DWORD **PTMC12_Enable**(dwBoardNo);

- **Parameters:**

dwBoardNo	[Input]	Board number (From 1 to N)

- **Returns:**
  0: Write OK
  PCI_DriverNoOpen: Kernel driver no find
  PCI_BoardNoIsZero: dwBoardNo is 0, it must be in the range of 1~N
  PCI_BoardNoExeccdFindBoards: dwBoardNo > N

Note: 1. Call PTMC12_DetectCards() before calling this function
2. Call PTMC12_DetectBoards() to detect all PCI-TMC12 boards
3. Call PTMC12_OpenBoard() before calling this function

2.4.4 PTMC12_DisableInt

- **Description:**
  Disable interrupt of PCI-TMC12 series.

- **Syntax:**
  DWORD **PTMC12_Disable**(dwBoardNo);

- **Parameters:**

dwBoardNo	[Input]	Board number (From 1 to N)

- **Returns:**
  0: Write OK
  PCI_DriverNoOpen: Kernel driver no find
  PCI_BoardNoIsZero: dwBoardNo is 0, it must be in the range of 1~N
  PCI_BoardNoExeccdFindBoards: dwBoardNo > N

Note: 1. Call PTMC12_DetectCards() before calling this function
2. Call PTMC12_DetectBoards() to detect all PCI-TMC12 boards
3. Call PTMC12_OpenBoard() before calling this function

2.4.5 PTMC12_WriteCounter

- **Description:**
  Set the counter, mode and data of the Timer/Counter.

- **Syntax:**
  WORD **PTMC12_WriteCounter**(**dwBoardNo**, **Counter**, **Mode**, **Data**);

- **Parameters:**

dwBoardNo	[Input]	Board number (From 1 to N)
Counter	[Input]	Set the counter number (From 1 to 12).
Mode	[Input]	User set mode 0~5 of the Timer/Counter
Data	[Input]	User set counter value of the Timer/Counter channels.

- **Returns:**
  Refer to the return codes for Sec. 2 Function Descriptions.

2.4.6 PTMC12_ReadCounter

- **Description:**
  This function could read Timer/Counter data.

- **Syntax:**
  WORD **PTMC12_ReadCounter**(**dwBoardNo**, **Counter**, ***Data**);

- **Parameters:**

dwBoardNo	[Input]	Board number (From 1 to N)
Counter	[Input]	Set the counter number (From 1 to 12).
Data	[Output]	Read value of the Timer/Counter.

- **Returns:**
  Refer to the return codes for Sec. 2 Function Descriptions.

2.5 Read / Write to PCI Controller

2.5.1 PTMC12_WritePciDword

- **Description:**
  Write one dword(32-bit) of data to PCI controller.

- **Syntax:**
  DWORD **PCITMC12_WritePciDword**(**dwBoardNo**, **Data**);

- **Parameters:**

dwBoardNo	[Input]	Board number (From 1 to N)
Data	[Input]	One dword of data (32-bit)

- **Returns:**
  0: Write OK
  PCI_DriverNoOpen: Kernel driver no find
  PCI_BoardNoIsZero: dwBoardNo is 0, it must be in the range of 1~N
  PCI_BoardNoExeccdFindBoards: dwBoardNo > N

Note: **1. Call PTMC12_DetectCards() before calling this function**

2. Call PTMC12_DetectBoards() to detect all PCI-TMC12 boards

3. Call PTMC12_OpenBoard() before calling this function

4. PTMC12_WritePciDWord(dwBoardNo, 0x4c, Data) → Write to interrupt controller register, refer to Sec. 3.3.5 of "PCI-TMc12(A) User's Manual"

2.5.2 PTMC12_ReadPciDword

- **Description:**
  Read one dword (32-bit) of data from PCI control register.

- **Syntax:**
  DWORD **PCITMC12_ReadPciDword**(**dwBoardNo, *Data**);

- **Parameters:**

dwBoardNo	[Input]	Board number. (From 1 to N)
Data	[Output]	One dword of data (32-bit)

- **Returns:**
  0: Write OK
  PCI_DriverNoOpen: Kernel driver no find
  PCI_BoardNoIsZero: dwBoardNo is 0, it must be in the range of 1~N
  PCI_BoardNoExeccdFindBoards: dwBoardNo > N.

Note: 1. Call PTMC12_DetectCards() before calling this function

2. Call PTMC12_DetectBoards() to detect all PCI-TMC12 boards

3. Call PTMC12_OpenBoard() before calling this function

4. PTMC12_ReadPciDWord(dwBoardNo, 0x4c, Data) → Read the interrupt tatus register, refer to Sec. 3.3.5 of "PCI-TMc12(A) User's Manual"

3. Program Architecture

In general, the first DLL called must be PTMC12_DriverInit(), it will initiate the kernel mode driver. The second DLL called must be PTMC12_DetectBoards(), it will find all PCI-TMC12 series in this PC.

The PCI_OpenBoard(...) will open and Lock the target PCI-TMC12 series until PCI_Close Board(...) or PCI_CloseAll() is called.

For single-task applications, only one user's program control PCI-TMC12 series. So the program will open and lock PCI-TMC12 series in the program is start and un-lock PCI-TMC12 series in the program is exit as follows:

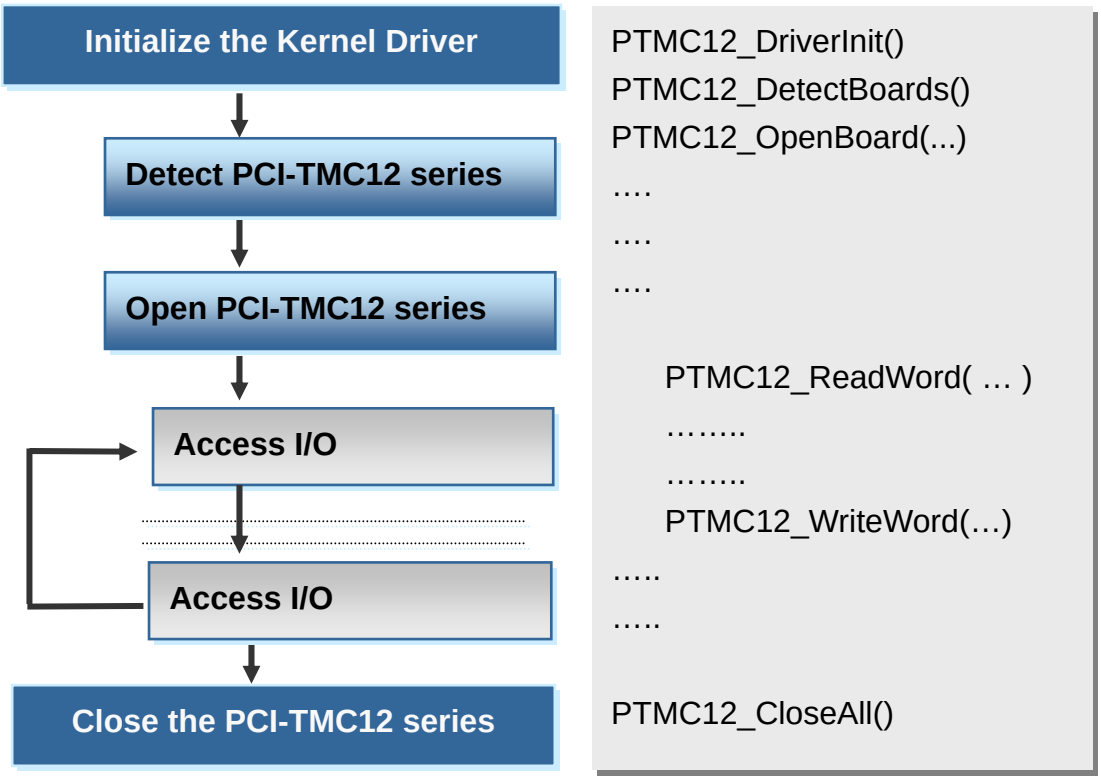

For multi-task applications, many user's programs will control PCI-TMC12 series. So the program will open and lock PCI-TMC12 series before access the I/O. Then un-lock PCI-TMC12 series after access the I/O as follows:

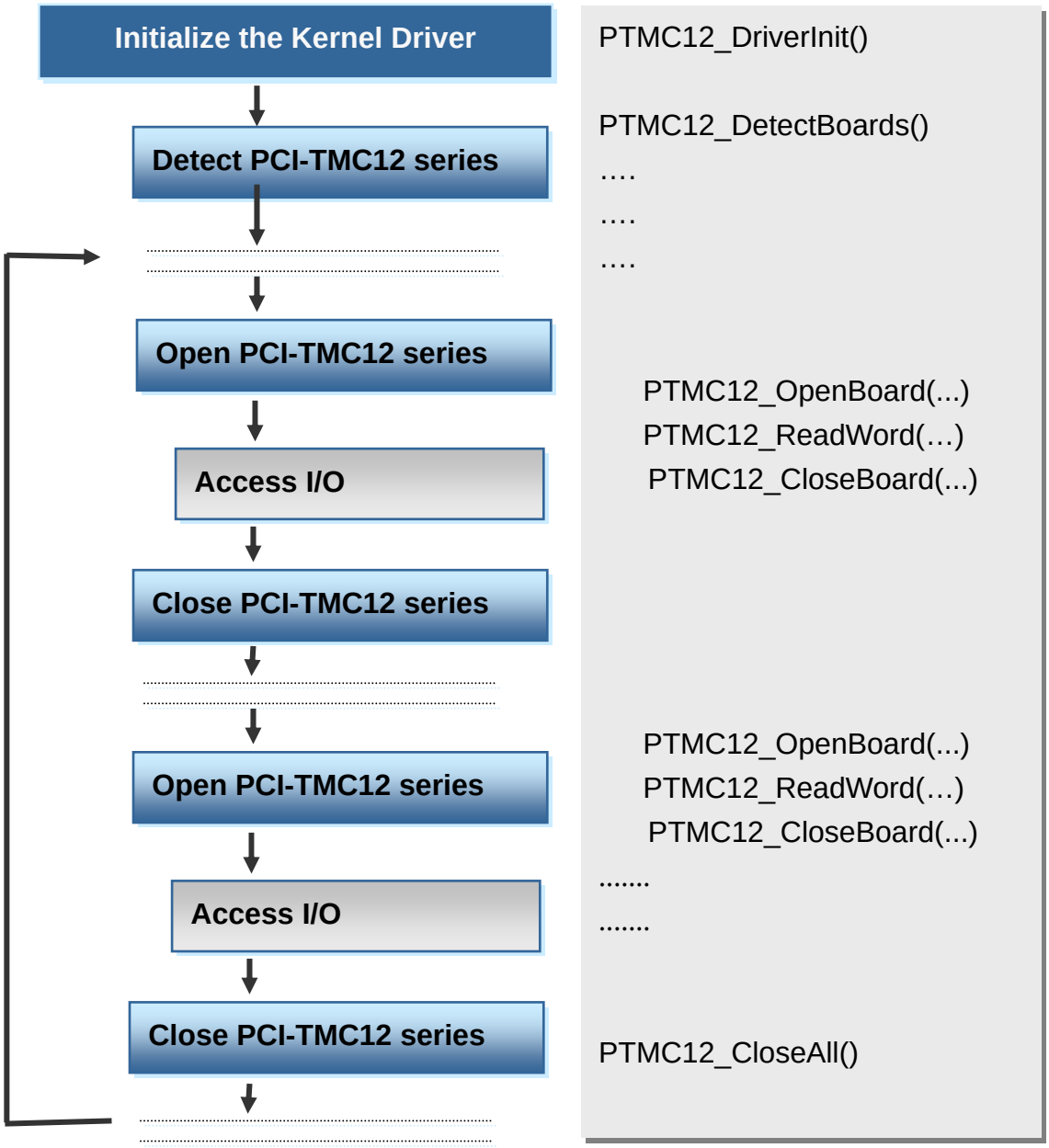

For interrupt applications, the program style is given as follows:

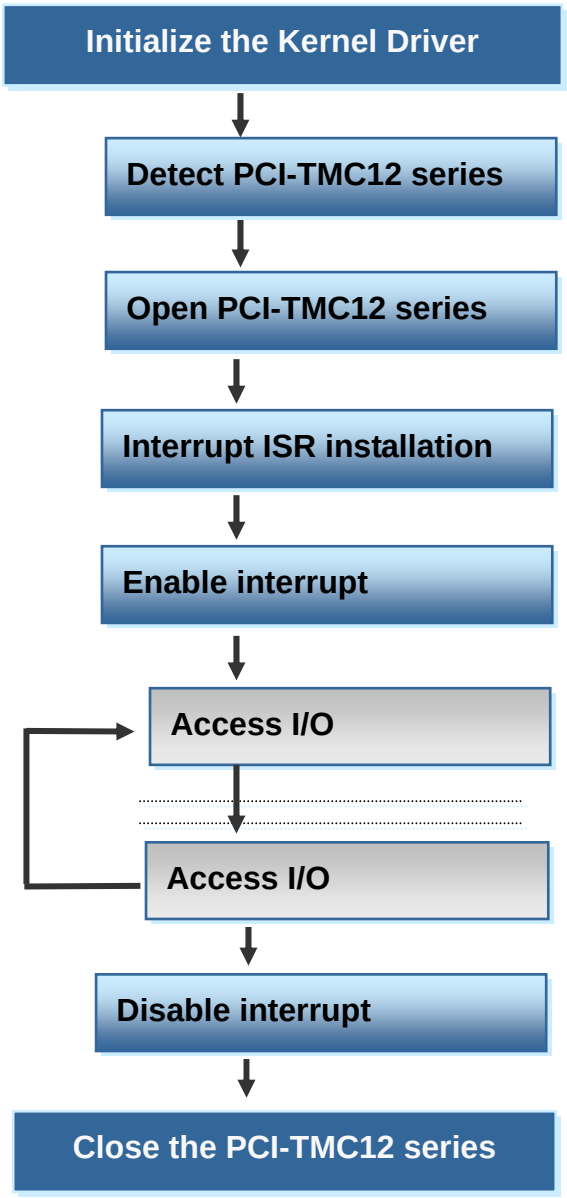


```
PTMC12_DriverInit()
PTMC12_DetectBoards()
PTMC12_OpenBoard(...)
PTMC12_InstallCallBackFunc(…)
PTMC12_EnableInt(...)

…..
…..

    PTMC12_ReadWord(…)
    ……..
    ……..
    PTMC12_WriteWord(…)

…..

PTMC12_DisableInt()

PTMC12_CloseAll()
```

When the interrupt signal is active, the kernel mode driver will call user's call back function once. Refer to demo program, WatchDog & CountLow, for more information.

3.1 Problems Report

Technical support is available at no charge as described below. The best way to report problems is to send electronic mail to Service@icpdas.com or Service.icpdas@ gmail.com on the Internet.

When reporting problems, please include the following information:

1. Is the problem reproducible? If so, how?
2. What kind and version of **platform** that you using? For example, Windows 98, Windows 2000 or 32-bit Windows XP/2003/Vista/2008/7.
3. What kinds of our **products** that you using? Please see the product's manual.
4. If a dialog box with an **error message** was displayed, please include the full test of the dialog box, including the text in the title bar.
5. If the problem involves **other programs** or **hardware devices**, what devices or version of the failing programs that you using?
6. **Other comments** relative to this problem or **any suggestions** will be welcomed.

After we had received your comments, we will take about two business days to test the problems that you said. And then reply as soon as possible to you. Please check that if we had received you comments? And please keeps contact with us.

E-mail: Service@icpads.com
Service.icpdas@ gmail.com

Web Site: http://www.icpdas.com
http://www.icpdas.com.tw