ISO-DA16/DA8

Hardware Manual

Warranty

All products manufactured by ICP DAS are warranted against defective materials for a period of one year from the date of delivery to the original purchaser.

Warning

ICP DAS assumes no liability for damages consequent to the use of this product. ICP DAS reserves the right to change this manual at any time without notice. The information furnished by ICP DAS is believed to be accurate and reliable. However, no responsibility is assumed by ICP DAS for its use, nor for any infringements of patents or other rights of third parties resulting from its use.

Copyright

Copyright 1997 by ICP DAS. All rights are reserved.

Trademark

The names used for identification only may be registered trademarks of their respective companies.

Table of Contents

1. INTRODUCTION 3

1.1 GENERAL DESCRIPTION 3

1.2 THE BLOCK DIAGRAMS 4

1.3 FEATURES 5

1.4 SPECIFICATIONS 6

1.5 PRODUCT CHECK LIST 7

2. HARDWARE CONFIGURATION 8

2.1 BOARD LAYOUT 8

2.2 J1 : IRQ CHANNEL SELECTION 9

2.3 I/O BASE ADDRESS SETTING 10

2.3.1 Base Address Table 11

2.3.2 D/I Input Buffer Register 13

2.3.3 D/O Output Latch Register 13

2.3.4 Status Register 14

2.3.5 D/O Output Enable Register 14

2.3.6 Read/Write Command Register 15

2.3.7 Clear Interrupt Signal Register 15

2.4 CN1 CONNECTOR 16

2.5 CN2 CONNECTOR 16

2.6 CN3 CONNECTOR 17

2.7 SIGNAL CONNECTION 18

2.7.1 Voltage Output Connection 18

2.7.2 Current Output Connection 18

2.8 DAUGHTER BOARDS 19

2.8.1 DB-16P Isolated Input Board 19

2.8.2 DB-16R Relay Board 20

2.8.3 DB-24PR Power Relay Board 21

2.8.4 DB-8125 Screw Terminal Board 22

2.8.5 DB37 22

2.8.6 DN-37 (D-Sub Connector with DIN Rail Mounting) 23

3. FUNCTION OPERATION 24

3.1 THE ±10 V VOLTAGE OUTPUT 24

3.2 THE ±5 V VOLTAGE OUTPUT 25

3.3 THE 0-10 V VOLTAGE OUTPUT 25

3.4 THE 0-5 V VOLTAGE OUTPUT 25

3.5 THE 0-20 MA CURRENT OUTPUT 26

3.6 THE 4-20 MA CURRENT OUTPUT 26

3.7 NO VR & NO JUMPER DESIGN 27

3.8 SOFTWARE CALIBRATION 28

1. Introduction

1.1 General Description

The ISO-DA16/DA8 is bus-type isolated 14-bit D/A card for PC/AT compatible computers. The optical isolation of the ISO-DA16/DA8 can withstand up to 2500 V of common-mode voltage.

The ISO-DA16/DA8 offers 16/8 channel analog output. The voltage output range can be configured as ±10 V and the current output can be configured as 0 ~ 20 mA.

The board's innovative design improves on several drawbacks of the conventional D/A card. These features are as follows:

- Trimless, no jumpers, high channel number and high isolation (2500 V) design.
- All calibrations can be done by software. The calibration data is stored in the on-board EEPROM.
- The power-on value of the analog output can be pre-defined by the user and is stored in the on-board EEPROM.
- Configurations: ±10 V or 0~20 mA.
- Every channel can be programmed as voltage output or current output
- All channel configurations can be selected and changed by software. The user doesn't have to change any hardware.
- All 16 channels can be configured and used in different configurations at the same time.(for example, channel_0 = ±10 V, channel_1 = 0~20 mA, channel_2 = ±10 V , ….., at the same time)
- The onboard machine independent timer can be programmed from 0.1 ms to 100 ms. when the time is up, a hardware signal can be used to interrupt PC.
- 16-channel D/I can be directly connected to isolated daughter board, DB-16P
- 16-channel D/O can be directly connected to relay board, DB-16R, DB-24R
- All these features are implemented in a small, compact, reliable and half-size PCB.

1.2 The Block Diagrams

The block diagram of ISO-DA16/DA8 is shown as follows:

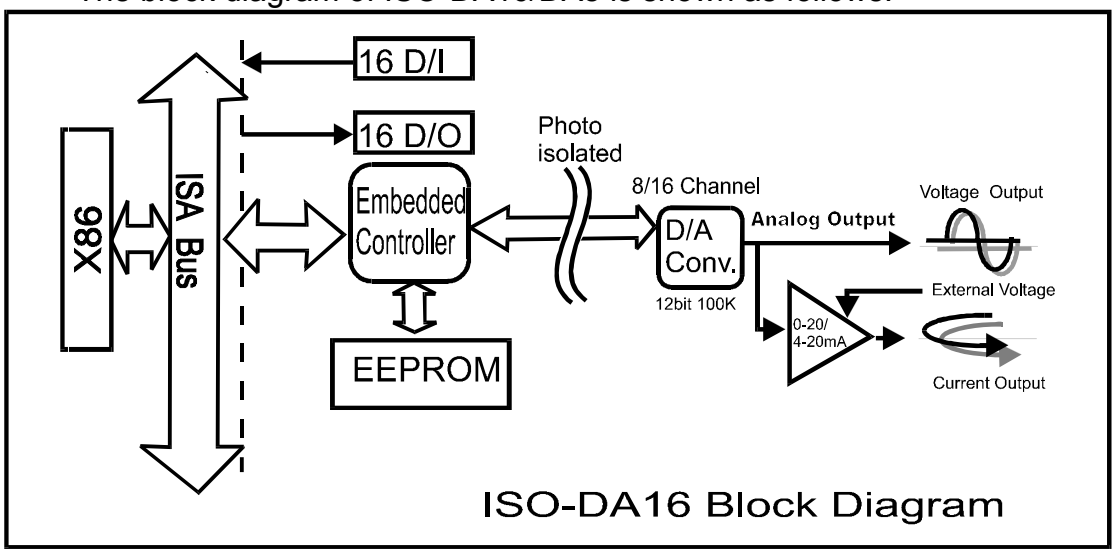

Figure 1: The block diagram of ISO_DA16.

The x86 sends one command to the embedded controller through ISA bus. The embedded controller will auto read and execute this command. The results of this command will be stored in the internal data memory of the embedded controller, therefore the x86 can read back and analyze these results through ISA bus.

The x 86 sites and the analog output site are fully isolated. Therefore noises from external devices will be isolated from the x86, this will improve the X86's reliability.

The calibration can be done by software without any hardware trimming. The x86 will send out the calibration command, the embedded controller will store this calibration data into EEPROM. After first power-on, the software driver on the x86 site can download this calibration data from EEPROM.

The power-on start-up value of the analog output can be set by software. These power-on values are also stored in EEPROM. After first power-on, the embedded controller will load this data automatically and controller the D/A output to their start-up values. These start-up values programmed to be voltage output or current output.

The x86 only needs to send out commands and the embedded controller will handle the control details.

1.3 Features

The general features of ISO-DA16/DA8 are given as follows:

- ISA bus
- 2500 V_{DC} photo-isolation protection
- 8/16 channel, 14-bit analog output
- Output Type (Unipolar or Bipolar) and output range (0~5 V, 0~10 V, ±5 V, ±10 V) can be software programmable
- Voltage/current output for each channel
- 4 ~ 20 mA current sink to ground from each converter
- Double-buffered D/A latches
- Command set programming
- Software Calibration

1.4 Specifications

Model Name	ISO-DA8	ISO-DA16
Analog Output		
Isolation Voltage	2500 V_{DC} (Double-buffered, multiplying)	
Channels	8 independent	16 independent
Resolution	14-bit	
Accuracy	0.1% of FSR ± 1 LSB @ 25 °C, ± 10 V	
Slew Rate	0.6 V/μs	
Output Impedance	0.1 Ω max.	
Operating Mode	Software	
Voltage Output Range		
Output Range	+10 V ~ -10 V	
Current drive	+/- 5 mA	
Absolute accuracy	0.01% of FSR +/-2 LSB	
Current Output Range		
Current output	0 ~ 20 mA	
Absolute Accuracy	0.1% of FSR +/-2 LSB	
Excitation voltage range	+7 V ~ +40 V	
Stability		
Offset temperature coefficient	+/-50 μV/deg C	
Gain temperature coefficient	+/-10 ppm (C)	
General		
Bus Type	ISA	
I/O Connector	Female DB37 x 1 20-pin box header x 2	
Dimensions (L x W x D)	182 mm x 122 mm x 22 mm	
Power Consumption	800 mA @ +5 V (max.)	1400 mA @ +5 V (max.)
Operating Temperature	0 ~ 60 °C	
Storage Temperature	-20 ~ 70 °C	
Humidity	5 ~ 85% RH, non-condensing	

1.5 Product Check List

The package includes the following items:

- One piece of ISO-DA16/DA8 multifunction card.
- One company floppy diskette or CD
- One Quick Start Guide.

Attention!

If any of these items is missing or damaged, please contact your local field agent. Save the shipping materials and carton in case you want to ship or store the product in the future.

2. Hardware Configuration

2.1 Board Layout

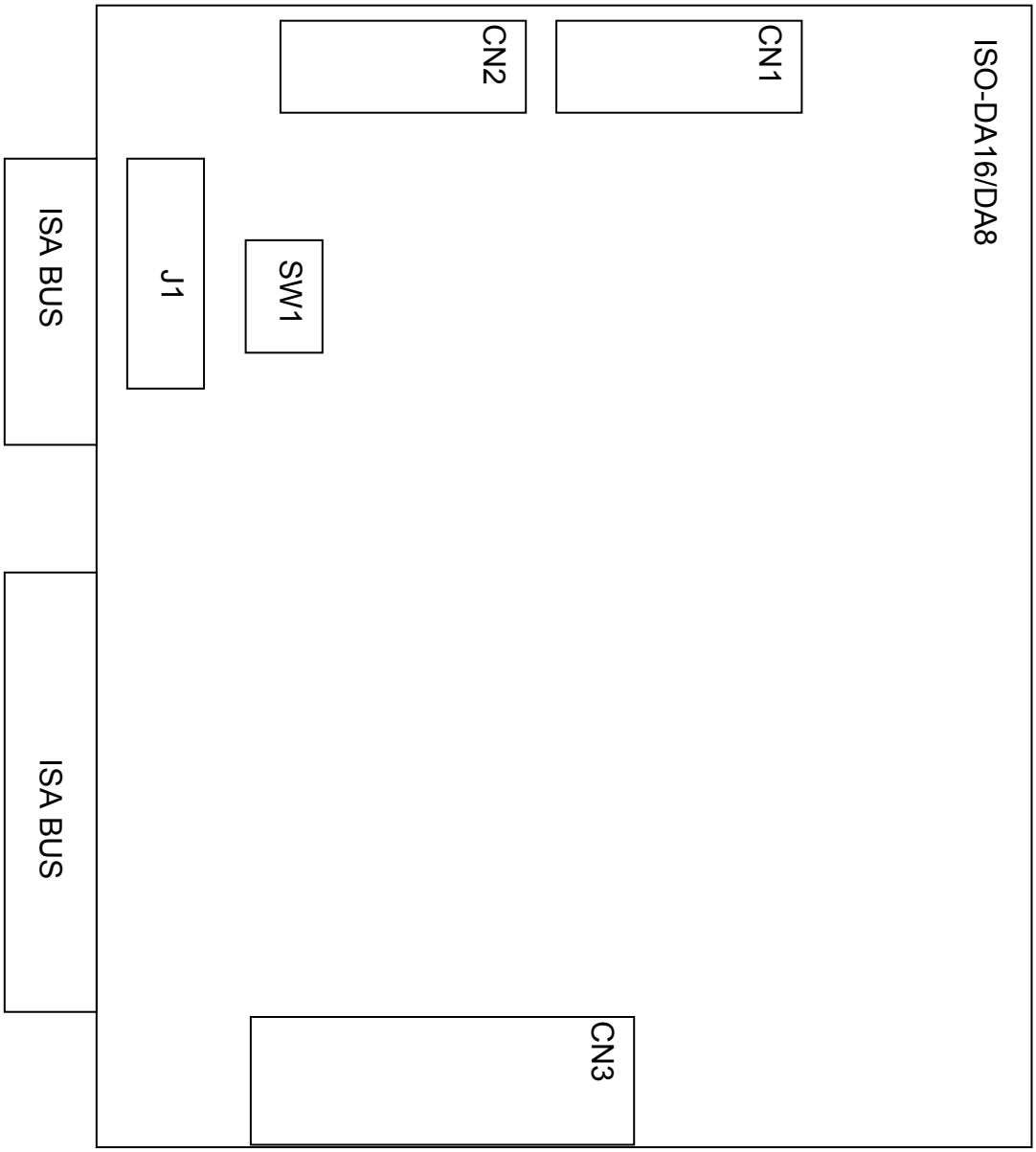

CN1 : 16-channel D/I

CN2 : 16-channel D/O

CN3 : 16/8 channels voltage/current output

J1 : IRQ selection

SW1 : I/O BASE address selection

2.2 J1 : IRQ Channel Selection

There is one machine independent timer in ISO-DA16/DA8. This timer is programmable from 0.1 ms ~ 100 ms. When the timer is up, the embedded controller will generate an hardware interrupt signal. This signal can be used to interrupt PC or can be read back by polling in PC site.

NO Interrupt (default)

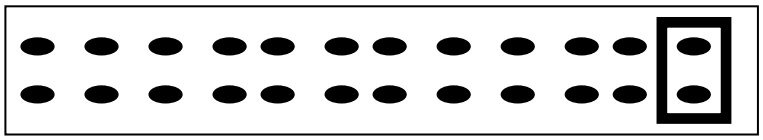

IRQ	3	4	5	6	7	9	10	11	12	14	15 NC

Interrupt 15

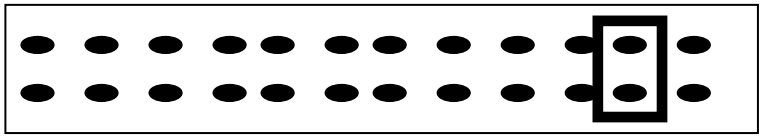

IRQ	3	4	5	6	7	9	10	11	12	14	15 NC

2.3 I/O Base Address Setting

The ISO-DA16 occupies 8 consecutive locations in I/O address space from BASE to BASE+7. The default setting is 0x220 as following:

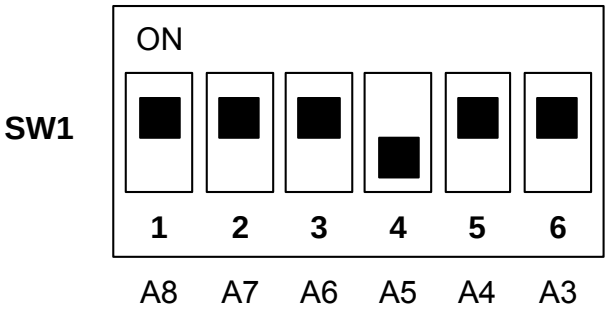

Default Base Address 220 Hex

For Example

How to select 2 2 0 (Hex)

OFF → 1
ON → 0

2		2				0
1	ON	ON	ON	OFF	ON	ON
	→ 0	0	0	1	0	0
	A8	A7	A6	A5	A4	A3

The detail SW1 base addresses setting. Please refer to **2.3.1 Base Address Table.**

2.3.1 Base Address Table

Base Address	A8 1	A7 2	A6 3	A5 4	A4 5	A3 6
200-207	ON	ON	ON	ON	ON	ON
208-20F	ON	ON	ON	ON	ON	OFF
210-217	ON	ON	ON	ON	OFF	ON
218-21F	ON	ON	ON	ON	OFF	OFF
220-227 (*)	**ON**	**ON**	**ON**	**OFF**	**ON**	**ON**
228-22F	ON	ON	ON	OFF	ON	OFF
230-237	ON	ON	ON	OFF	OFF	ON
238-23F	ON	ON	ON	OFF	OFF	OFF
240-247	ON	ON	OFF	ON	ON	ON
248-24F	ON	ON	OFF	ON	ON	OFF
250-257	ON	ON	OFF	ON	OFF	ON
258-25F	ON	ON	OFF	ON	OFF	OFF
260-267	ON	ON	OFF	OFF	ON	ON
268-26F	ON	ON	OFF	OFF	ON	OFF
270-277	ON	ON	OFF	OFF	OFF	ON
278-27F	ON	ON	OFF	OFF	OFF	OFF
280-287	ON	OFF	ON	ON	ON	ON
288-28F	ON	OFF	ON	ON	ON	OFF
290-297	ON	OFF	ON	ON	OFF	ON
298-29F	ON	OFF	ON	ON	OFF	OFF
2A0-2A7	ON	OFF	ON	OFF	ON	ON
2A8-2AF	ON	OFF	ON	OFF	ON	OFF
2B0-2B7	ON	OFF	ON	OFF	OFF	ON
2B8-2BF	ON	OFF	ON	OFF	OFF	OFF
2C0-2C7	ON	OFF	OFF	ON	ON	ON
2C8-2CF	ON	OFF	OFF	ON	ON	OFF
2D0-2D7	ON	OFF	OFF	ON	OFF	ON
2D8-2DF	ON	OFF	OFF	ON	OFF	OFF
2E0-2E7	ON	OFF	OFF	OFF	ON	ON
2E8-2EF	ON	OFF	OFF	OFF	ON	OFF
2F0-2F7	ON	OFF	OFF	OFF	OFF	ON
2F8-2FF	ON	OFF	OFF	OFF	OFF	OFF
300-307	OFF	ON	ON	ON	ON	ON
308-30F	OFF	ON	ON	ON	ON	OFF
310-317	OFF	ON	ON	ON	OFF	ON
318-31F	OFF	ON	ON	ON	OFF	OFF
320-327	OFF	ON	ON	OFF	ON	ON
328-32F	OFF	ON	ON	OFF	ON	OFF

330-337	OFF	ON	ON	OFF	OFF	ON
338-33F	OFF	ON	ON	OFF	OFF	OFF
340-347	OFF	ON	OFF	ON	ON	ON
348-34F	OFF	ON	OFF	ON	ON	OFF
350-357	OFF	ON	OFF	ON	OFF	ON
358-35F	OFF	ON	OFF	ON	OFF	OFF
360-367	OFF	ON	OFF	OFF	ON	ON
368-36F	OFF	ON	OFF	OFF	ON	OFF
370-377	OFF	ON	OFF	OFF	OFF	ON
378-37F	OFF	ON	OFF	OFF	OFF	OFF
380-387	OFF	OFF	ON	ON	ON	ON
388-38F	OFF	OFF	ON	ON	ON	OFF
390-397	OFF	OFF	ON	ON	OFF	ON
398-39F	OFF	OFF	ON	ON	OFF	OFF
3A0-3A7	OFF	OFF	ON	OFF	ON	ON
3A8-3AF	OFF	OFF	ON	OFF	ON	OFF
3B0-3B7	OFF	OFF	ON	OFF	OFF	ON
3B8-3BF	OFF	OFF	ON	OFF	OFF	OFF
3C0-3C7	OFF	OFF	OFF	ON	ON	ON
3C8-3CF	OFF	OFF	OFF	ON	ON	OFF
3D0-3D7	OFF	OFF	OFF	ON	OFF	ON
3D8-3DF	OFF	OFF	OFF	ON	OFF	OFF
3E0-3E7	OFF	OFF	OFF	OFF	ON	ON
3E8-3EF	OFF	OFF	OFF	OFF	ON	OFF
3F0-3F7	OFF	OFF	OFF	OFF	OFF	ON
3F8-3FF	OFF	OFF	OFF	OFF	OFF	OFF

(*): Default Setting

The PC I/O port mapping is given below.

ADDRESS	Device	ADDRESS	Device
000-1FF	PC reserved	320-32F	XT Hard Disk
200-20F	Game/control	378-37F	Parallel Printer
210-21F	XT Expansion Unit	380-38F	SDLC
238-23F	Bus Mouse/Alt. Bus Mouse	3A0-3AF	SDLC
278-27F	Parallel Printer	3B0-3BF	MDA/Parallel Printer
2B0-2DF	EGA	3C0-3CF	EGA
2E0-2E7	AT GPIB	3D0-3DF	CGA
2E8-2EF	Serial Port	3E8-3EF	Serial Port
2F8-2FF	Serial Port	3F0-3F7	Floppy Disk
300-31F	Prototype Card	3F8-3FF	Serial Port

The I/O control registers are defined as follows:

I/O Address	Input Operation	Output Operation
BASE	D/I low byte read	D/O low byte read
BASE+1	D/I high byte read	D/O high byte read
BASE+2	Read Status	D/O output enable
BASE+3	Read Command	Write Command
BASE+4	Clear Interrupt Signal	Reserved

2.3.2 D/I Input Buffer Register

(READ) Base: D/I Input Buffer Low Byte Data Format

Bit 7	Bit 6	Bit 5	Bit 4	Bit 3	Bit 2	Bit 1	Bit 0
D7	D6	D5	D4	D3	D2	D1	D0

(READ) Base+1: D/I Input Buffer High Byte Data Format

Bit 7	Bit 6	Bit 5	Bit 4	Bit 3	Bit 2	Bit 1	Bit 0
D7	D6	D5	D4	D3	D2	D1	D0

D/I 16bit input data: D15….D0 , D15=MSB,D0=LSB

The ISO-DA16/DA8 provides 16 TTL compatible digital inputs. The low 8 bits are stored in address BASE. The high 8 bits are stored in address BASE+1.

2.3.3 D/O Output Latch Register

(WRITE) Base: D/O Output Latch Low Byte Data Format

Bit 7	Bit 6	Bit 5	Bit 4	Bit 3	Bit 2	Bit 1	Bit 0
D7	D6	D5	D4	D3	D2	D1	D0

(WRITE) Base+1: D/O Output Latch High Byte Data Format

Bit 7	Bit 6	Bit 5	Bit 4	Bit 3	Bit 2	Bit 1	Bit 0
D7	D6	D5	D4	D3	D2	D1	D0

D/O 16-bit output data: D15….D0 , D15=MSB,D0=LSB

The ISO-DA16/DA8 provides 16 TTL compatible digital outputs. The low 8 bits are stored in address **BASE.** The high 8 bits are stored in address **BASE+1.** When first powered-on, all the D/O output latch ports are disabled, therefore all D/O are in floating state. All D/O will active if any value output to BASE+2, D/O output enables control register. If this D/O is active, they will active and can't be disable again. So only one enabled output is enough.

2.3.4 Status Register

(READ) Base+2: Status Format

Bit 7	Bit 6	Bit 5	Bit 4	Bit 3	Bit 2	Bit 1	Bit 0
X	X	X	X	D3	D2	D1	D0

D0=1 ➔ ready to read

D1=1 ➔ ready to write

D2=2 ➔ embedded controller error

D3=3 ➔ embedded controller sends a hardware interrupt signal

X=don't care

2.3.5 D/O Output Enable Register

(WRITE) Base+2: D/O Output Enable Register Format

Bit 7	Bit 6	Bit 5	Bit 4	Bit 3	Bit 2	Bit 1	Bit 0
X	X	X	X	X	X	X	X

X=don't care

When first powered-on, all the D/O output latch ports are disabled. Therefore, all D/O are in floating state. All D/O will active if any value output to BASE+2, D/O output enables control register. If this D/O register is active, it will activate and can't be disabled again. So only one enabled output is enough.

2.3.6 Read/Write Command Register

(Write) Base+3: Write Command Register

(Read) Base+3: Read Command Register

Refer to chapter 4 for command sets format.

2.3.7 Clear Interrupt Signal Register

(READ) Base+4: Clear Interrupt Signal Register Format

Bit 7	Bit 6	Bit 5	Bit 4	Bit 3	Bit 2	Bit 1	Bit 0
X	X	X	X	X	X	X	X

X=don’t care

The onboard machine independent timer can be programmed from 0.1 ms ~ 100 ms. When the time is up, a hardware signal can be used to interrupt PC. This signal will be active until access to BASE+3, clear interrupt signal register. The J1 will be in NC position in the factory setting, but the hardware interrupt signal is also active. Therefore the software will access or read the clear interrupt signal register after the timer is up.

2.4 CN1 Connector

CN1 : Digital Input Connector Pin Assignment.

Pin Number	Description	Pin Number	Description
1	Digital Input 0/TTL	2	Digital Input 1/TTL
3	Digital Input 2/TTL	4	Digital Input 3/TTL
5	Digital Input 4/TTL	6	Digital Input 5/TTL
7	Digital Input 6/TTL	8	Digital Input 7/TTL
9	Digital Input 8/TTL	10	Digital Input 9/TTL
11	Digital Input 10/TTL	12	Digital Input 11/TTL
13	Digital Input 12/TTL	14	Digital Input 13/TTL
15	Digital Input 14/TTL	16	Digital Input 15/TTL
17	PCB‘s GND output	18	PCB‘s GND output
19	PCB‘s +5 V output	20	PCB ‘s +12 V output

The ISO-DA16/DA8 has 16-channel TTL compatible D/I. The **DB-16P** (16 channel isolation input board) is designed for directly connecting to this CN1 connector.

2.5 CN2 Connector

CN2 : Digital Output Connector Pin Assignment.

Pin Number	Description	Pin Number	Description
1	Digital Output 0/TTL	2	Digital Output 1/TTL
3	Digital Output 2/TTL	4	Digital Output 3/TTL
5	Digital Output 4/TTL	6	Digital Output 5/TTL
7	Digital Output 6/TTL	8	Digital Output 7/TTL
9	Digital Output 8/TTL	10	Digital Output 9/TTL
11	Digital Output 10/TTL	12	Digital Output 11/TTL
13	Digital Output 12/TTL	14	Digital Output 13/TTL
15	Digital Output 14/TTL	16	Digital Output 15/TTL
17	PCB‘s GND output	18	PCB‘s GND output
19	PCB‘s +5 V output	20	PCB‘s +12 V output

The ISO-DA16/DA8 has 16-channel TTL compatible D/O. The **DB-16R** (16 channel relay board) and **DB-24PR** (24-channel power relay board) are designed for connecting to this CN2 connector.

2.6 CN3 Connector

Pin assignment for single-ended analog input

Pin	Name	Pin	Name
1	Voltage Output 0	20	Current Output 0
2	Voltage Output 1	21	Current Output 1
3	Voltage Output 2	22	Current Output 2
4	Voltage Output 3	23	Current Output 3
5	Analog Ground	24	Analog Ground
6	Voltage Output 4	25	Current Output 4
7	Voltage Output 5	26	Current Output 5
8	Voltage Output 6	27	Current Output 6
9	Voltage Output 7	28	Current Output 7
10	Analog Ground	29	Analog Ground
11	Voltage Output 8	20	Current Output 8
12	Voltage Output 9	31	Current Output 9
13	Voltage Output 10	32	Current Output 10
14	Voltage Output 11	33	Current Output 11
15	Analog Ground	34	Current Output 12
16	Voltage Output 12	35	Current Output 13
17	Voltage Output 13	36	Current Output 14
18	Voltage Output 14	37	Current Output 15
19	Voltage Output 15		

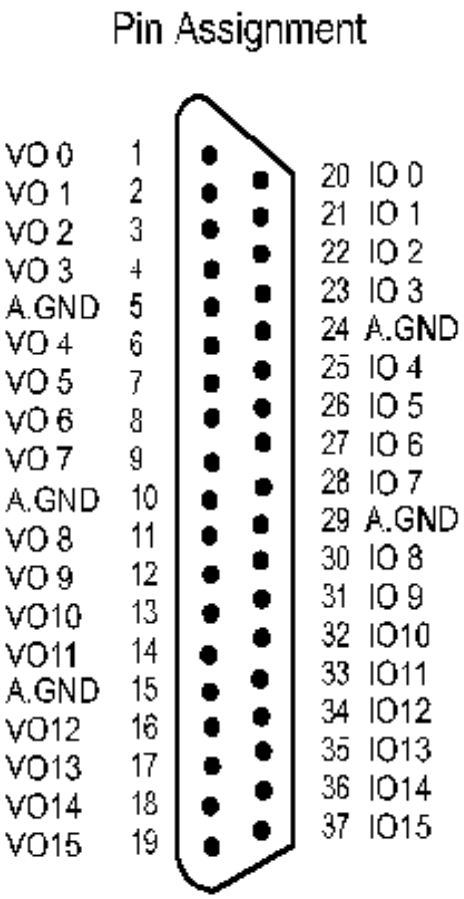

2.7 Signal Connection

2.7.1 Voltage Output Connection

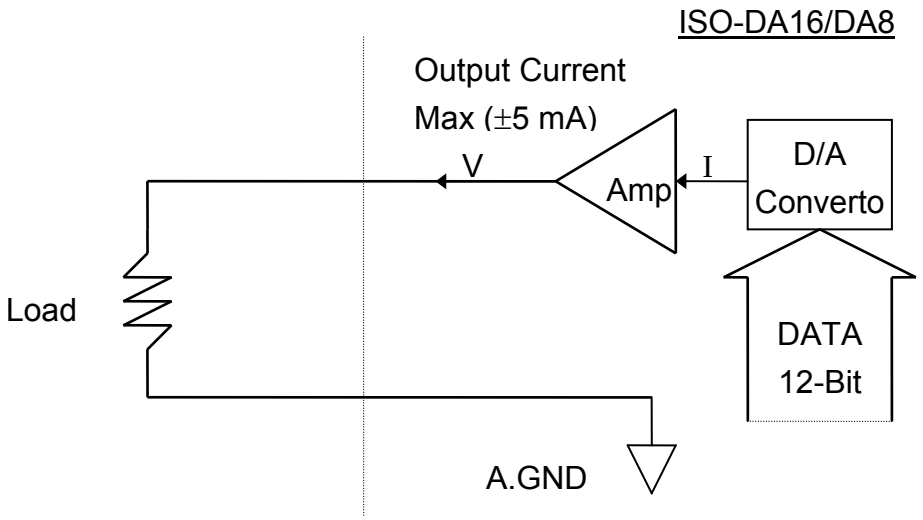

The ISO-DA16/DA8 voltage output maximum current: ± 5 mA

2.7.2 Current Output Connection

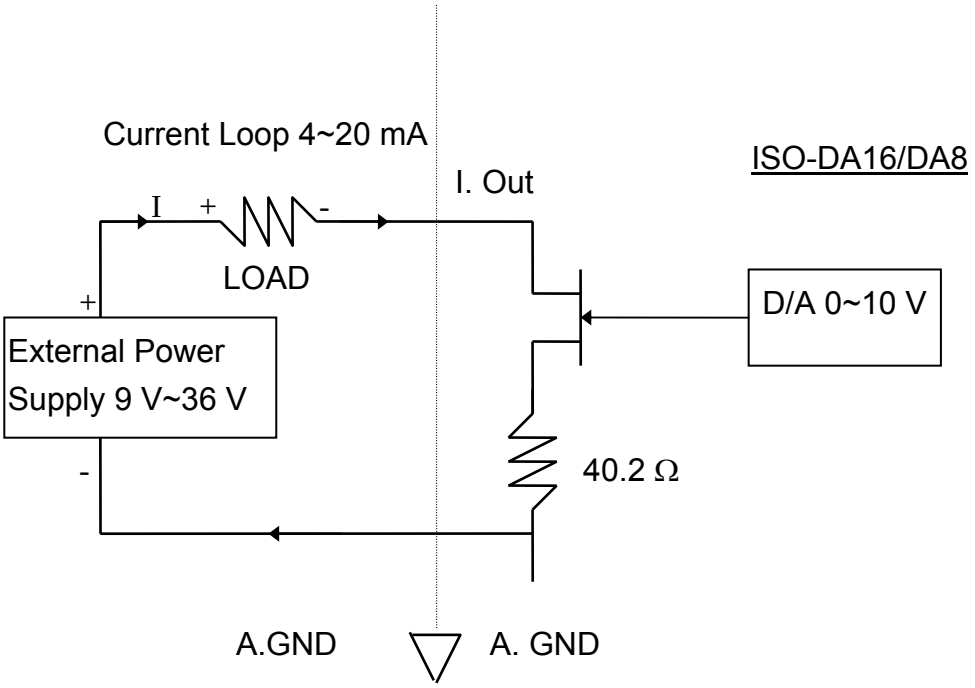

2.8 Daughter Boards

2.8.1 DB-16P Isolated Input Board

The DB-16P is a 16-channel isolated digital input daughter board. The optically isolated inputs of the DB-16P consist of a bi-directional optocoupler with a resistor for current sensing. You can use the DB-16P to sense DC signal from TTL levels up to 24 V or use the DB-16P to sense a wide range of AC signals. You can use this board to isolate the computer from large common-mode voltage, ground loops and transient voltage spikes that often occur in industrial environments.

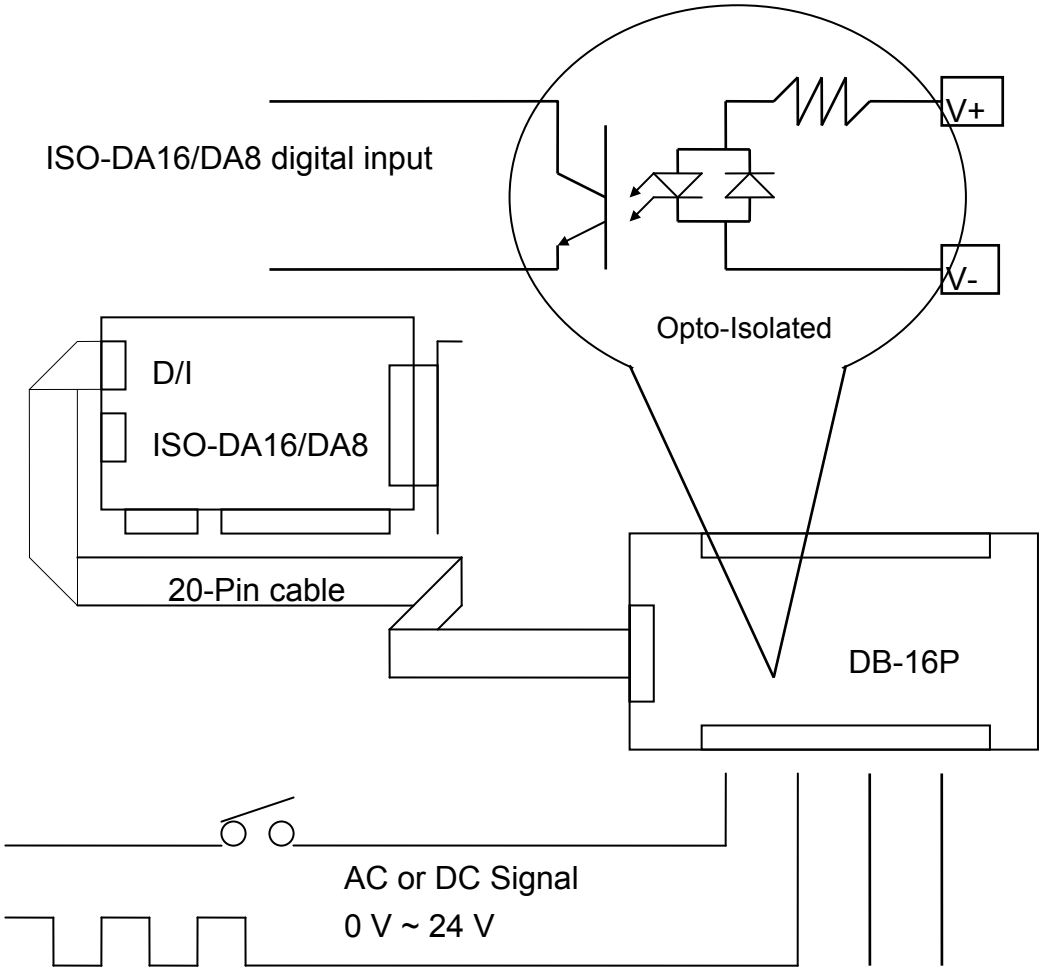

2.8.2 DB-16R Relay Board

The DB-16R is a 16-channel relay output board consists of 16 Form C relays for efficient switching of loads by programmed control. It is connector and functionally compatible with 785 series board but with industrial type terminal blocks. The relays are energized by applying a 5 volt signal to the appropriate relay channel on the 20-pin flat connector. There are 16 enunciator LEDs for each relay, light when their associated relay is activated. To avoid overloading your PC's power supply, this board provides a screw terminal for external power supply.

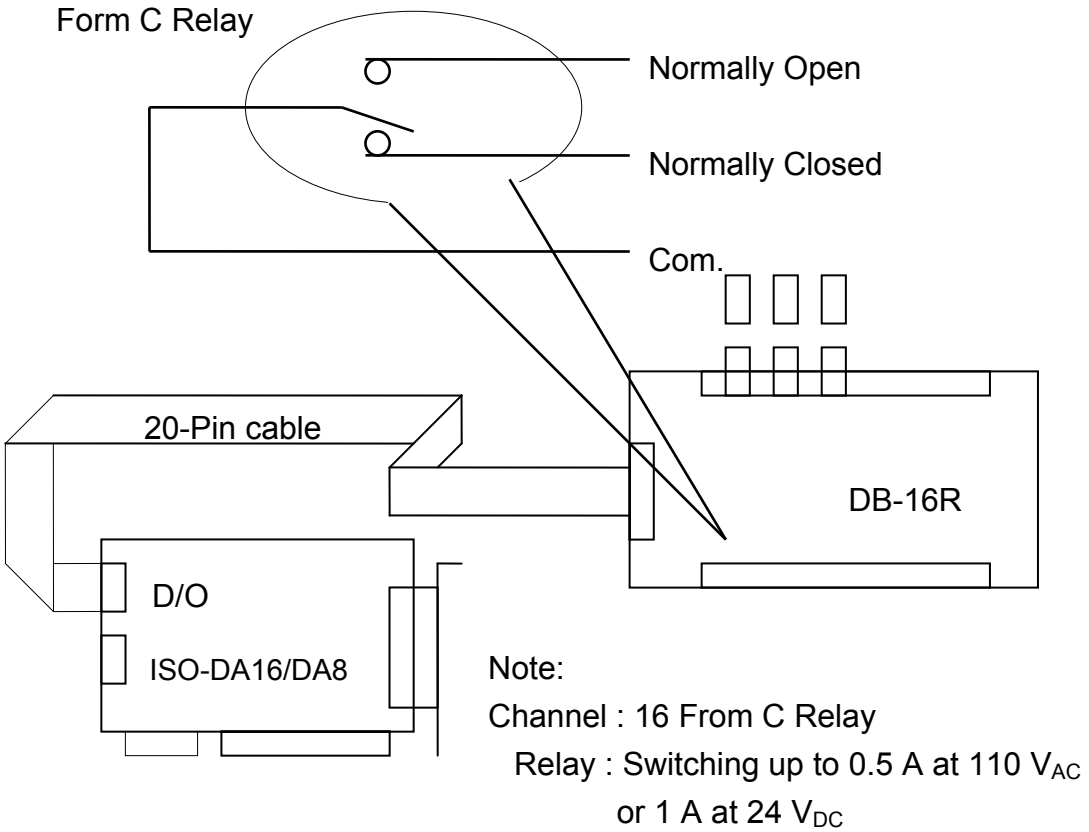

2.8.3 DB-24PR Power Relay Board

The DB-24PR, 24-channel power relay output board consists of 8 Form C and 16 form A electromechanical relays for efficient switching of loads by programmed control. The contact of each relay can control a 5 A load at 250 V_{AC}/30 V_{DC}. The relay is energized by applying a 5 volt signal to the appropriate relay channel on the 20-pin flat cable connector(just using 16 relays) or an 50-pin flat cable connector.(OPTO-22 compatible, for DIO-24 series). Twenty-four enunciator LEDs, one for each relay, light when their associated relay is activated. To avoid overloading your PC's power supply, this board needs a +12 V_{DC} or +24 V_{DC} external power supply.

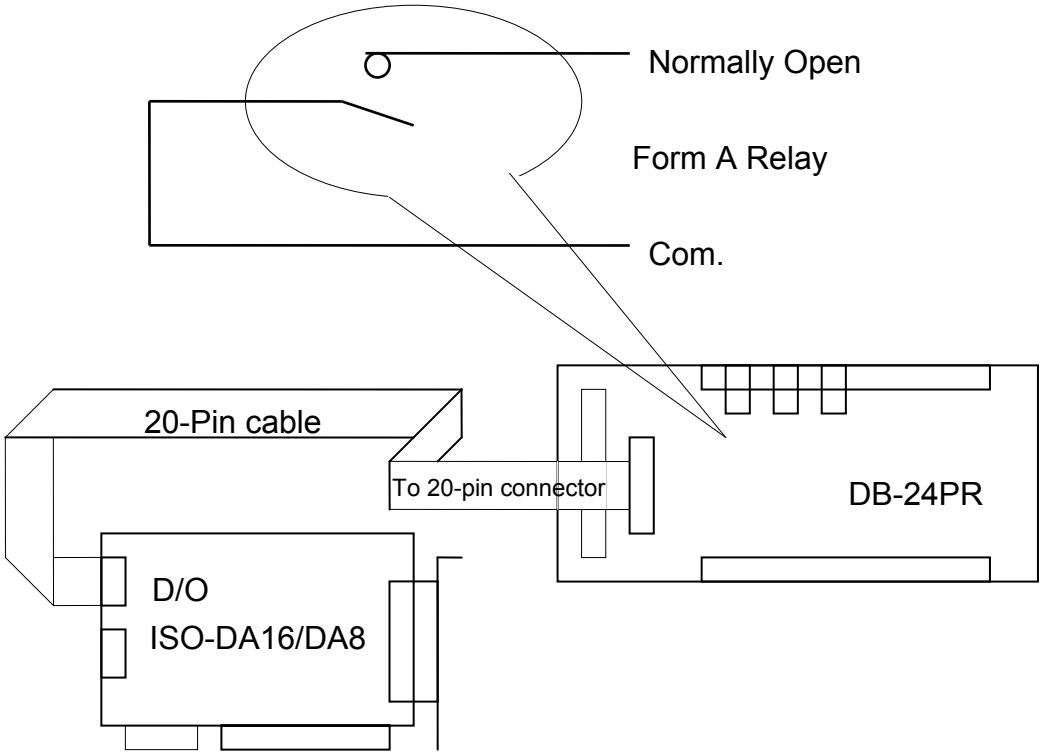

Note:

50-Pin connector(OPTO-22 compatible), for DIO-24, DIO-48, DIO-144

20-Pin connector for 16 channel digital output, A-82X, A-62X, DIO-64, ISO-DA16/DA8

Channel : 16 Form A Relay , 8 Form C Relay

Relay : switching up to 5 A at 110 V_{AC} / 5 A at 30 V_{DC}

2.8.4 DB-8125 Screw Terminal Board

The DB-8125 is low cost universal screw terminal board for 37-pin D-type connectors or two 20-pin connectors.

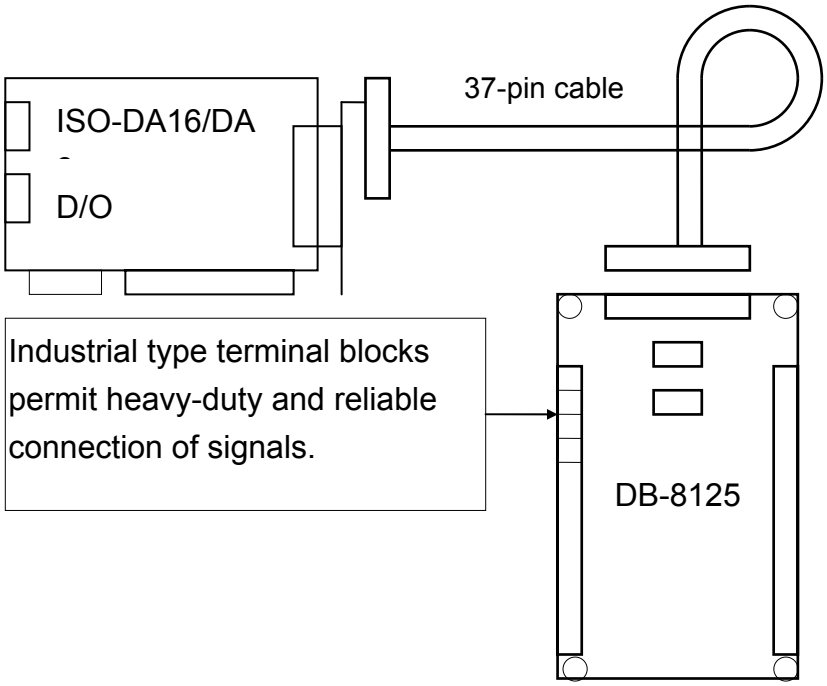

2.8.5 DB37

The DB-37 is a daughter board that directly connects to a D-sub 37 pins connector. It is designed for easy wire connections.

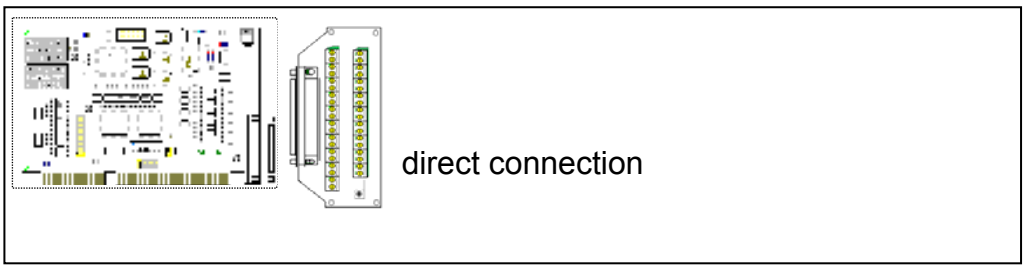

2.8.6 DN-37 (D-Sub Connector with DIN Rail Mounting)

Termination accessory with 37 screw terminals for easy connection of field I/O signals to 37-pin boards. It has a 37-pin D-sub connector for direct connection to hardware by a 37-pin cable. It can be mounted on a standard DIN rail.

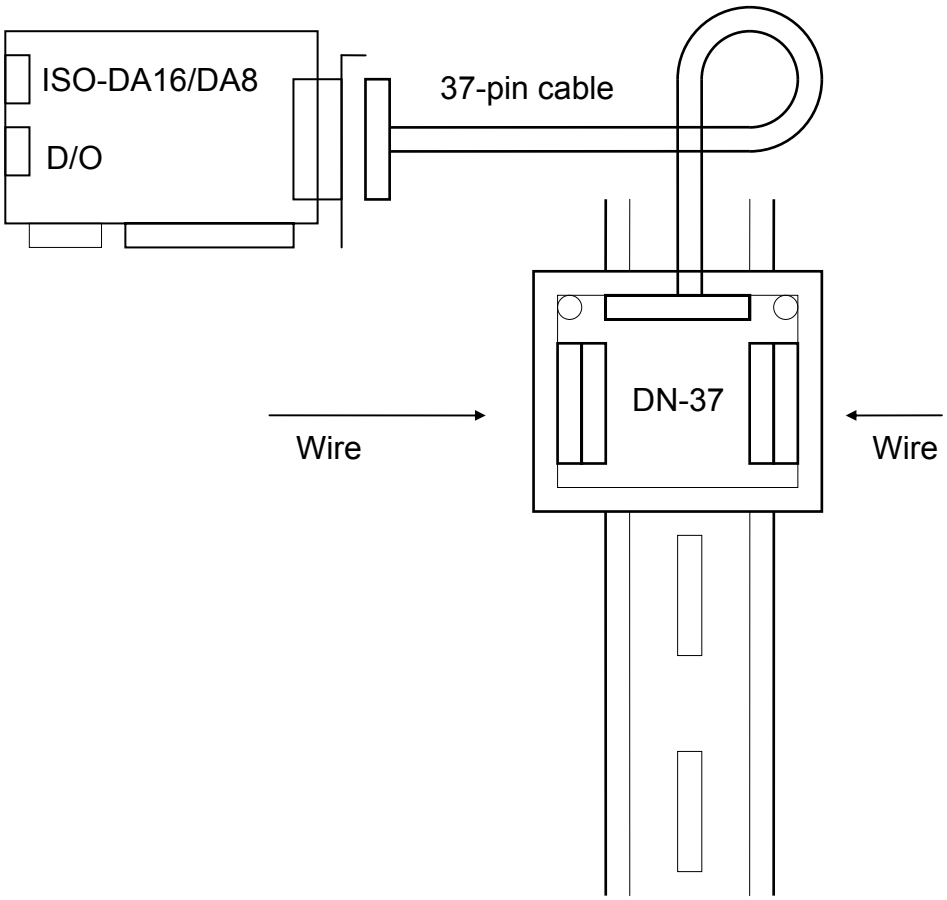

3. Function Operation

3.1 The ±10 V Voltage Output

The D/A converter of the ISO-DA16/DA8 is 14-bit, from 0x0000 to 0x3FFF. The hardware is designed to output voltage about ±10.1 V as follows:

0x0000 → about -10.1 volt

0x3FFF → about +10.1 volt

Therefore the software can calibrate the voltage output to ±10.000 volt without any hardware VRs adjustment. For example,

Channel Number	Min[n]=-10.000 volt	Max[n]=10.000 volt
0	134	16294
1	132	16296
2	134	16294
3	134	16295
4	137	16297
5	136	16297
6	138	16296
7	135	16295
8	135	16297
9	131	16298
10	136	16299
11	135	16296
12	133	16297
13	127	16302
14	134	16296
15	132	16296

If the user needs to send out **VV** volt to **channel n** voltage output, the hex value, **HH**, sent to D/A converter is given as follows:

Delta[n]=20.0/(MAX[n]-Min[n]); → Delta = volt per count
HH = (VV+10.0)/Delta[n]+Min[n]; → HH = Hex value sent to D/A converter

3.2 The ±5 V Voltage Output

The voltage output hardware of ISO-DA16/DA8 is always in ±10 V range. If the user needs to output ±5 V range, the software is the same as described in Sec. 3.1. Because the user wants to output ±5 V range, therefore VV will be in the ±5 V range, so the HH will be about from 0x1000 ~ 0x2FFF. **This means the resolution is about 13 bits.**

3.3 The 0-10 V Voltage Output

The voltage output hardware of ISO-DA16/DA8 is always in ±10 V range. If the user needs to output 0~10 V range, the software is the same as described in Sec. 3.1. Because the user wants to output 0~10 V range, therefore VV will be in the 0~10 V range, so the HH will be about from 0x2000 to 0x3FFF. **This means the resolution is about 13 bits.**

3.4 The 0-5 V Voltage Output

The voltage output hardware of ISO-DA16/DA8 is always in ±10 V range. If the user need to output 0~5 V range, the software is the same as described in Sec. 3.1. Because the user wants to output 0~5 V range, therefore VV will be in the 0~5 V range, so the HH will be about from 0x2000 to 0x2FFF. **This means the resolution is about 12 bits.**

3.5 The 0-20 mA Current Output

The voltage output hardware of ISO-DA16/DA8 is always in ±10 V range. The 0~10 V voltage output will convert to 0~22 mA current output. Therefore the software can calibrate the current output to 0~20 mA without any hardware VRs adjustment. For example,

Channel Number	Min[n]=0 mA	Max[n]=20.000 mA
0	134	16294
1	132	16296
2	134	16294
3	134	16295
4	137	16297
5	136	16297
6	138	16296
7	135	16295
8	135	16297
9	131	16298
10	136	16299
11	135	16296
12	133	16297
13	127	16302
14	134	16296
15	132	16296

If the user need to send out **II** mA to **channel n** voltage output, the hex value, **HH**, sent to D/A converter is given as follows:

Delta[n]=20.0/(MAX[n]-Min[n]); → Delta = mA per count
HH = II/Delta[n]+Min[n]; → HH = Hex value sent to D/A converter

The resolution is about 13 bit.

3.6 The 4-20 mA Current Output

The voltage output hardware of ISO-DA16/DA8 is always in ±10 V range. The 0~10 V voltage output will convert to 0~22 mA current output. If the user needs to output 4~20 mA, the software is the same as described in Sec. 3.5. Because the user wants to output 4~20 mA, therefore II will be in the 4~20 range, so the HH will be about from 0x2600 ~ 0x3FFF. **This means the resolution is about 13 bits.**

3.7 No VR & No Jumper Design

In the conventional 12-bit D/A board, for example A-626/A-628, there are many jumpers for the following functions:

(1) Select the reference voltage (internal -10/-5/or external)
(2) Select unipolar/bipolar (0~10 V or ±10 V)
(3) Select different output range (0~10 V or 0~5 V)

And there are many VRs for the following functions:

(1) Voltage output offset adjustment
(2) Voltage output full-scale adjustment
(3) Current output offset adjustment
(4) Current output full-scale adjustment

There are so many VRs and jumpers, this makes QC and re-calibration very difficult. Every step must be handled by human hands. It is not a happy job for people to calibrate these D/A boards.

When we design the ISO-DA16/DA8, we try to remove all these terrible VRs and jumpers but still maintain the same precision and performance. In the long run, we selected a 14-bit D/A converter and adapted the software calibration to provide at least the same performance & precision as A-626/A-628 as follows:

Configuration	Equivalent Bit	Resolution
-10 V ~ +10 V	14 bit	
0 V ~ 10 V	13 bit	
-5 V ~ +5 V	13 bit	
0 V ~ 5 V	12 bit	
0 mA ~ 20 mA	13 bit	
4 mA ~ 20 mA	13 bit	

- All the VRs and jumpers are removed.
- All calibrations can be done by software.
- All channel configurations can be selected by software, no need to change any hardware.
- The precision is at least the same as A-626/A-628.
- All 16 channels can be configured and used in different configurations at the same time.(for example, channel_0 = ±10 V, channel_1 = 4~20 mA, channel_2 = 0 ~ 5 V, …..)
- All these features can be implemented in a small, compact, reliable and half-size PCB.

3.8 Software Calibration

It is recommended to use a 16-bit A/D card to calibrate the ISO-DA16/DA8. The ICP Con I-7000 series is a set of precision remote controlled modules. The I-7017 is 8-channel 16-bit precision A/D module (24-bit sigma-delta A/D converter), we use two I-7017 for voltage output calibration and another two I-7017 for current output calibration.

The steps for channel_n voltage output calibration are given as follows:

```
step 1 : HH=0
step 2 : send HH to ISO-DA16/DA8 channel_n
step 3 : measure the I-7017 channel_n,
         if this value is just >= -10 V, then goto step5
step 4 : increment HH and goto step2
step 5 : Min[n]=HH-1
step 6 : HH=0x3FFF
step 7 : send HH to ISO-DA16/DA8 channel_n
step 8 : measure the I-7017 channel_n,
         if this value is just >= +10 V, then goto step10
step 9 : increment HH and goto step7
step 10: Max[n]=HH
```

NOTE : Min[n] & Max[n] are described in Sec. 3.1

The steps for channel_n current output calibration are given as follows:

```
step 1 : HH=0x2000
step 2 : send HH to ISO-DA16/DA8 channel_n
step 3 : measure the I-7017 channel_n,
         if this value is just >= 0 mA, then goto step5
step 4 : increment HH and goto step2
step 5 : Min[n]=HH-1
step 6 : HH=0x3FFF
step 7 : send HH to ISO-DA16/DA8 channel_n
step 8 : measure the I-7017 channel_n,
         if this value is just >= 20 mA, then goto step10
step 9 : increment HH and goto step7
step 10: Max[n]=HH
```

NOTE : Min[n] & Max[n] are described in Sec. 3.5