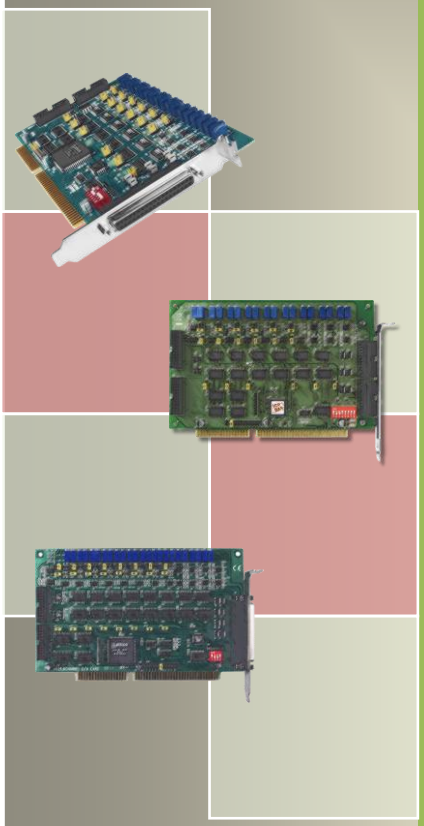

A-626/A-628/A-726 User Manual

ISA Bus, 6-/8-ch Analog Output and 16-ch DIO board Ver. 1.4, Jun. 2013

Support

Boards supported include A-626, A-628 and A-726.

Warranty

All products manufactured by ICP DAS are warranted against defective materials for a period of one year from the date of delivery to the original purchaser.

Warning

ICP DAS assumes no liability for damages consequent to the use of this product. ICP DAS reserves the right to change this manual at any time without notice. The information furnished by ICP DAS is believed to be accurate and reliable. However, no responsibility is assumed by ICP DAS for its use, nor for any infringements of patents or other rights of third parties resulting from its use.

Copyright

Trademark

Names are used for identification purposes only and may be registered trademarks of their respective companies.

Contact US

If you have any questions, please feel to contact us. We will response within 2 workdays.

Email: service@icpdas.com, service.icpdas@gmail.com

TABLE OF CONTENTS

1. INTRODUCTION 3

1.1 PACKING LIST 3
1.2 FEATURES 4
1.3 APPLICATIONS 4
1.4 SPECIFICATIONS 5

2. HARDWARE CONFIGURATION 6

2.1 BOARD LAYOUT 6
2.1.1 A-626's Layout 6
2.1.2 A-726's Layout 7
2.1.3 A-628's Layout 8
2.2 I/O BASE ADDRESS SETTINGS (SW1) 9
2.2.1 A-626/A-726 Address Settings 9
2.2.2 A-628 Address Settings 11
2.2.3 PC's I/O Address Mapping 12
2.3 D/A AND IRQ JUMPER SETTINGS 13
2.3.1 A-626/A-726 D/A Jumper Settings 13
2.3.2 A-628 D/A Jumper Settings 14
2.3.3 IRQ Jumper Settings 15
2.3.4 Reference Voltage Table 16
2.4 PIN ASSIGNMENTS 17
2.4.1 A-626 Pin Assignments 17
2.4.2 A-726 Pin Assignments 18
2.4.3 A-628 Pin Assignments 19
2.5 SIGNAL CONNECTION 20
2.5.1 Voltage Output 20
2.5.2 Current Loop 20

3. SOFTWARE INSTALLATION 21

4. HARDWARE INSTALLATION 25

5. TESTING A-626/628/726 SERIES CARD 29

5.1 DIO WIRING TEST 29

5.2 ANALOG OUTPUT WIRING TEST 30
5.3 EXECUTE THE TEST PROGRAM 32

6. PROGRAMMING 35

6.1 I/O PORT ADDRESS 35
6.2 D/A REGISTER 37
6.3 DATA REGISTER 38
6.4 DIGITAL INPUT/OUTPUT REGISTER 41

7. CALIBRATION 42

7.1 A-626/A-726 CALIBRATION 42
7.2 A-628 CALIBRATION 43

APPENDIX: DAUGHTER BOARD 44

A1. DB-16P Isolated Input Board 44
A2. DB-16R Relay Board 45
A4. DB-24PR Power Relay Board 46
A5. DB-8125 Screw Terminal Board 47
A6. DN-37 48
A7. DN-20 48

1. Introduction

The A-626, A-628 and A-726 are 12-bit analog output boards with 16 digital input channels and 16 digital output channels. The A-626 and A-726 supports 6 analog output channels while the A-628 supports 8 analog output channels. They are supports both current and voltage output range .The each D/A channel can be individually jumper selectable for different voltage range +/-10 V, +/-5 V, 0 ~ 5 V, 0 ~ 10 V and 4 ~ 20 mA (sink) current. On board reference chip BB Ref-01 is used for solving the thermo-drifting problem of the reference voltage.

These cards support various OS versions, such as Linux, DOS, Windows 98/NT/2000 and 32-bit Windows XP/Vista/7. DLL and Active X control together with various language sample programs based on Turbo C++, Borland C++, Microsoft C++, Visual C++, Borland Delphi, Borland C++ Builder, Visual Basic and LabVIEW are provided in order to help users quickly and easily develop their own applications.

1.1 Packing List

The shipping package includes the following items:

- One A-626/A-628/A-726 series card hardware
- One printed Quick Start Guide
- One software utility CD


A-626


A-628


A-726

Note!!
If any of these items is missing or damaged, contact the dealer from whom you purchased the product. Save the shipping materials and carton in case you want to ship or store the product in the future.

1.2 Features

- ISA bus
- 6 analog output channels for A-626/A-726 only
- 8 analog output channels for A-628 only
- 12-bit resolution, double buffered D/A converter
- Voltage output range: 0 ~ 5 V, 0 ~ 10 V, ±5 V, ±10 V
- Current output range: 4 ~ 20 mA (sink)
- Internal reference voltage: -5 V and -10 V
- External reference voltage: ±10 V (max.) AC or DC
- External interrupt request signals, IRQ level from IRQ3 ~ IRQ15
- 16 digital output channels
- 16 digital input channels
- D/I/O are TTL Compatible

1.3 Applications

- Servo control
- ON/OFF control
- Energy management
- Programmable current sink

1.4 Specifications

Model Name	A-726	A-626	A-628
Analog Output			
Channels (Resolution)	6 (12-bit)		8 (12-bit)
Accuracy	0.01 % of FSR ± 1 LSB @ 25 °C, ± 10 V		
Voltage Output Range	Unipolar: 0 ~ 5 V, 0 ~ 10 V Bipolar: +/- 5 V, +/- 10 V		
Current Output Range	4 ~ 20 mA		
Output Driving	+/- 5 mA		
Slew Rate	0.6 V/μs		
Output Impedance	0.1 Ω max.		
Operating Mode	Software		
Digital Input			
Channels (Compatibility)	16 (5 V/TTL)		
Input Voltage	Logic 0: 0.8 V max. Logic 1: 2.0 V min.		
Response Speed	1.0 MHz (Typical)		
Digital Output			
Channels (Compatibility)	16 (5 V/TTL)		
Output Voltage	Logic 0: 0.4 V max. Logic 1: 2.4 V min.		
Output Capability	Sink: 2.4 mA @ 0.8 V Source: 0.8 mA @ 2.0 V		
Response Speed	1.0 MHz (Typical)		
General			
Bus Type	ISA		
I/O Connector	20-pin box header x 4	Female Db37 x 1 20-pin box header x 2	
Dimensions (L x W x D)	157 mm x 106 mm x 22 mm		
Power Consumption	0.9 A @ +5 V (max.) 110 mA @ +12 V (max.) 90 mA @ -12 V (max.)		1.1 A @ +5 V (max.) 130 mA @ +12 V (max.) 105 mA @ -12 V (max.)
Operating Temperature	0 ~ 60 °C		
Storage Temperature	-20 ~ 70 °C		
Humidity	5 ~ 85% RH, non-condensing		

2. Hardware Configuration

2.1 Board Layout

2.1.1 A-626's Layout

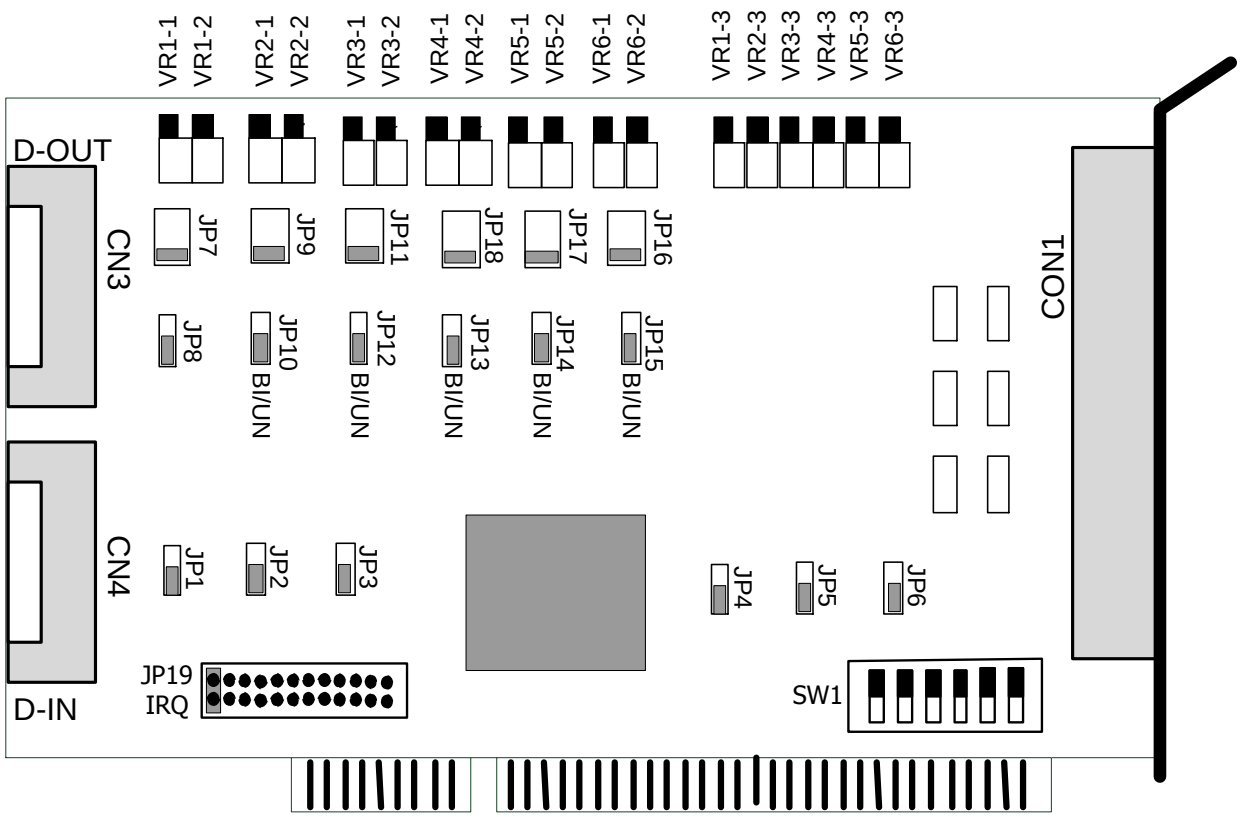

CON1	Analog Output (Sec. 2.4.1)
CN3, CN4	Digital Output, Digital Input (Sec. 2.4.1)
JP19 (IRQ)	Interrupt level selection (Sec. 2.3.3)
SW1	I/O Base Address Setting (Sec. 2.2.1)
JP 7/9/11/18/17/16	internal -5 V/-10 V and external reference voltage selection (Sec. 2.3.1)
JP 1/2/3/4/5/6/8/10/12/13/14/15	Bipolar/Unipolar voltage output selection (Sec. 2.3.1)

2.1.2 A-726's Layout

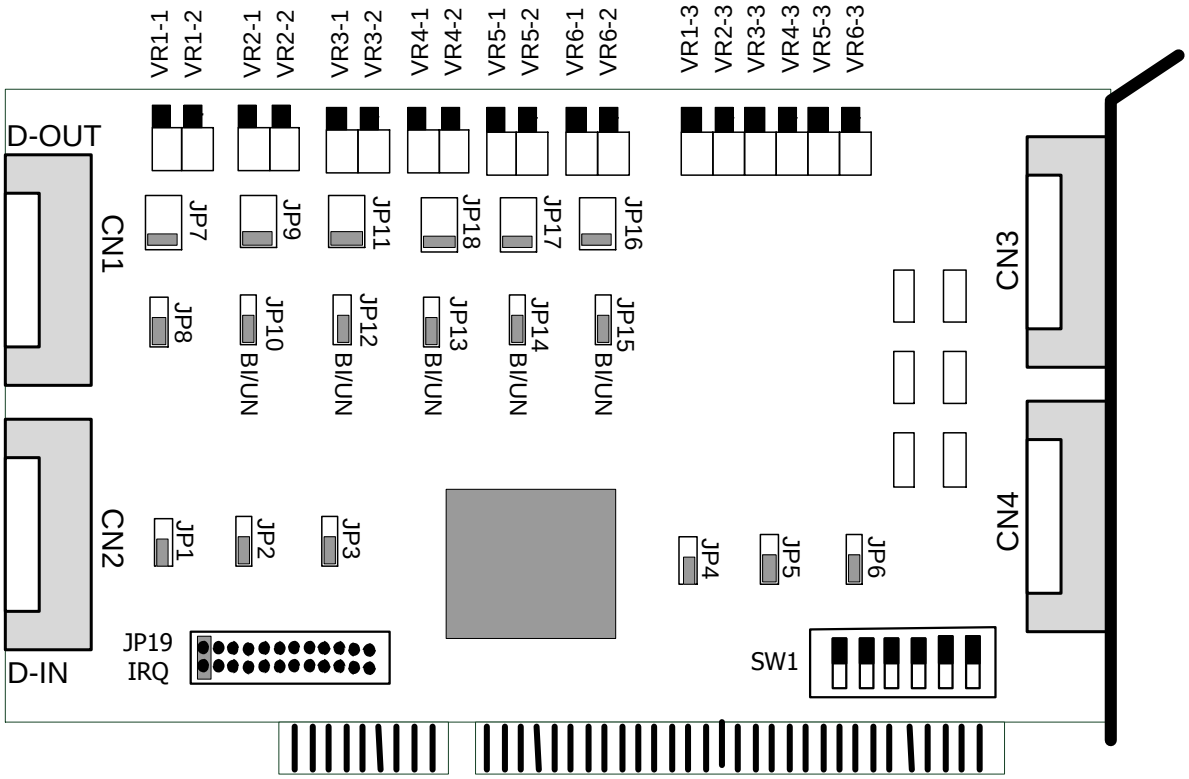

CN1, CN2	Digital Output, Digital Input (Sec. 2.4.2)
CN3, CN4	Analog Output (Sec. 2.4.2)
JP19 (IRQ)	Interrupt level selection (Sec. 2.3.3)
SW1	I/O Base Address Setting (Sec. 2.2.1)
JP 7/9/11/18/17/16	internal -5 V/-10 V and external reference voltage selection (Sec. 2.3.1)
JP 1/2/3/4/5/6/8/10/12/13/14/15	Bipolar/Unipolar voltage output selection (Sec. 2.3.1)

2.1.3 A-628's Layout

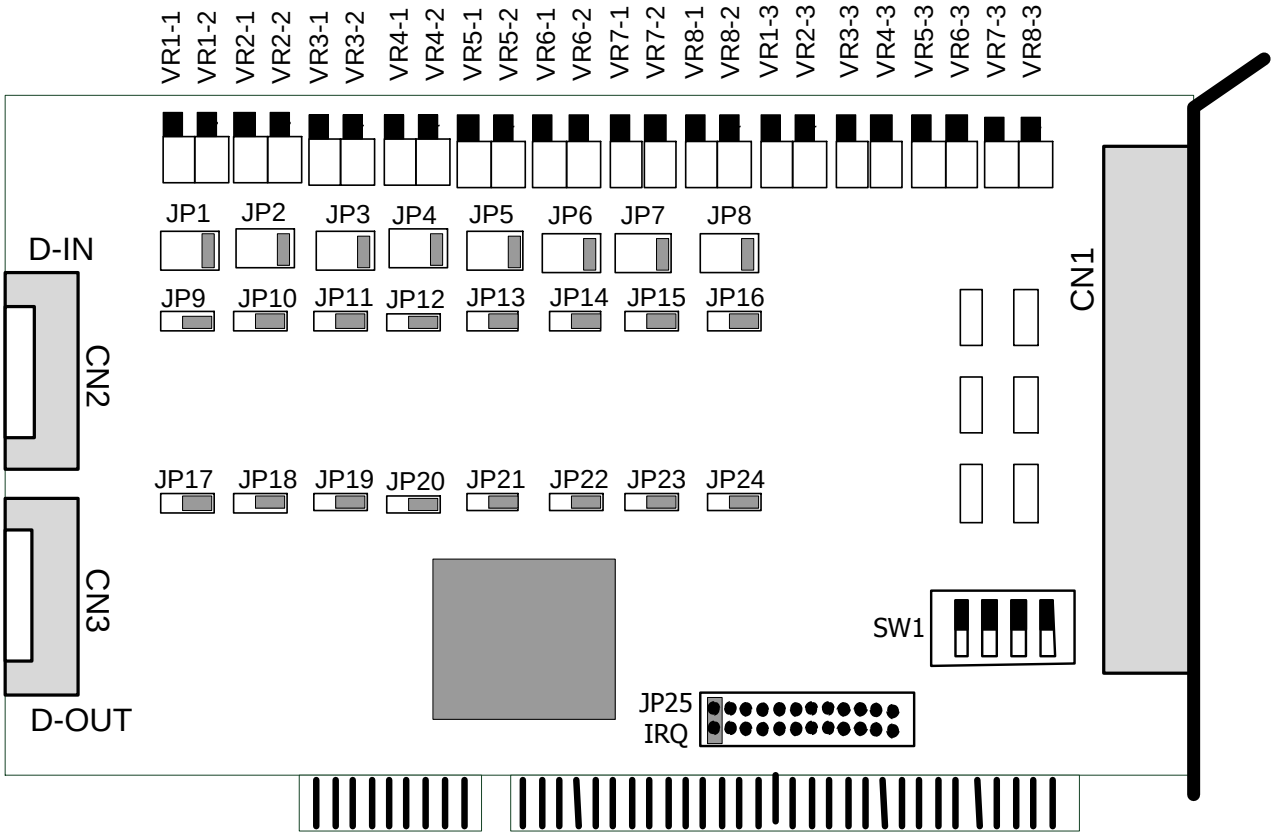

CN1	Analog Output (Sec. 2.4.3)
CN2, CN3	Digital Input, Digital Output (Sec. 2.4.3)
JP25 (IRQ)	Interrupt level selection (Sec. 2.3.3)
SW1	I/O Base Address Setting (Sec. 2.2.2)
JP 1/2/3/4/5/6/7/8	internal -5 V/-10 V and external reference voltage selection (Sec. 2.3.2)
JP 9/10/11/12/13/14/15/16 **JP17/18/19/20/21/22/23/24**	Bipolar/Unipolar voltage output selection (Sec. 2.3.2)

2.2 I/O Base Address Settings (SW1)

2.2.1 A-626/A-726 Address Settings

The A-626 and A-726 requires consecutive locations in I/O address space. The base address is set by DIP switch SW1 .The default I/O address is 2C0 Hex.

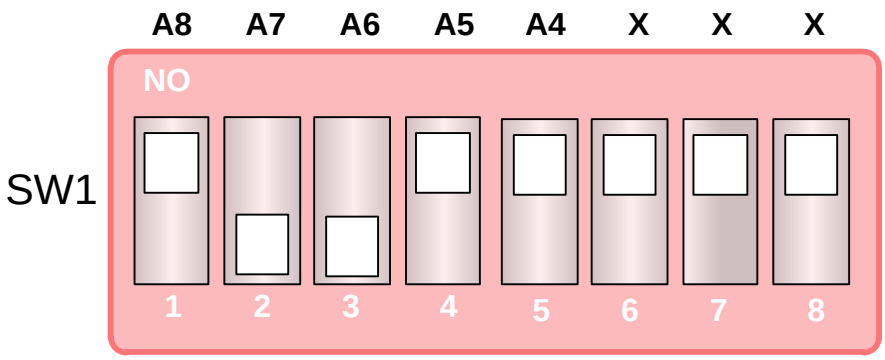

Default Base Address 2C0 Hex

For Example, How to select 2 C 0 (Hex)?

2		C				0
1	ON	**OFF**	**OFF**	ON	ON	x
	0	**1**	**1**	**0**	**0**	**x**
	A8	**A7**	**A6**	**A5**	**A4**	x
OFF → 1; **ON** → 0						

For detail I/O address settings, please refer to Table 2.1: A-626/A-726 Base Address Table.

Table 2.1: A-626/A-726 Base Address Table (*) Default Settings; OFF → 1; ON → 0

Card ID (Hex)	1 A8	2 A7	3 A6	4 A5	5 A4	6 ~ 8 x
200-20F	ON	ON	ON	ON	ON	X
210-21F	ON	ON	ON	ON	**OFF**	X
220-22F	ON	ON	ON	**OFF**	ON	X
230-23F	ON	ON	ON	**OFF**	**OFF**	X
240-24F	ON	ON	**OFF**	ON	ON	X
250-25F	ON	ON	**OFF**	ON	**OFF**	X
260-26F	ON	ON	**OFF**	**OFF**	ON	X
270-27F	ON	ON	**OFF**	**OFF**	**OFF**	X
280-28F	ON	**OFF**	ON	ON	ON	X
290-29F	ON	**OFF**	ON	ON	**OFF**	X
2A0-2AF	ON	**OFF**	ON	**OFF**	ON	X
2B0-2BF	ON	**OFF**	ON	**OFF**	**OFF**	X
(*)2C0-2CF	ON	**OFF**	**OFF**	ON	ON	X
2D0-2DF	ON	**OFF**	**OFF**	ON	**OFF**	X
2E0-2EF	ON	**OFF**	**OFF**	**OFF**	ON	X
2F0-2FF	ON	**OFF**	**OFF**	**OFF**	**OFF**	X
300-30F	**OFF**	ON	ON	ON	ON	X
310-31F	**OFF**	ON	ON	ON	**OFF**	X
320-32F	**OFF**	ON	ON	**OFF**	ON	X
330-33F	**OFF**	ON	ON	**OFF**	**OFF**	X
340-34F	**OFF**	ON	**OFF**	ON	ON	X
350-35F	**OFF**	ON	**OFF**	ON	**OFF**	X
360-36F	**OFF**	ON	**OFF**	**OFF**	ON	X
370-37F	**OFF**	ON	**OFF**	**OFF**	**OFF**	X
380-38F	**OFF**	**OFF**	ON	ON	ON	X
390-39F	**OFF**	**OFF**	ON	ON	**OFF**	X
3A0-3AF	**OFF**	**OFF**	ON	**OFF**	ON	X
3B0-3BF	**OFF**	**OFF**	ON	**OFF**	**OFF**	X
3C0-3CF	**OFF**	**OFF**	**OFF**	ON	ON	X
3D0-3DF	**OFF**	**OFF**	**OFF**	ON	**OFF**	X
3E0-3EF	**OFF**	**OFF**	**OFF**	**OFF**	ON	X
3F0-3FF	**OFF**	**OFF**	**OFF**	**OFF**	**OFF**	X

2.2.2 A-628 Address Settings

The A-628 requires 20 consecutive locations in I/O address space. The base address is set by DIP switch SW1.The default I/O address is 2C0 Hex.

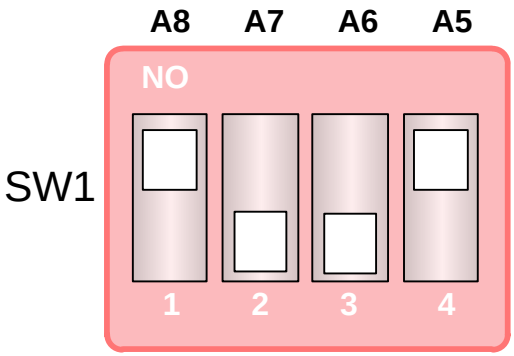

Default Base Address 2C0 Hex

For Example, How to select 2 C 0 (Hex)?

2		C					0
1	ON	OFF	OFF	ON	ON	0	
	0	1	1	0	0		
	A8	A7	A6	A5	A4		
OFF → 1; **ON** → 0							

For detail I/O address settings, please refer to Table 2.2: A-628 Base Address Table.

Table 2.2: A-628 Base Address Table (*) Default Settings; OFF → 1; ON → 0

Card ID (Hex)	1 A8	2 A7	3 A6	4 A5
200-21F	ON	ON	ON	ON
220-23F	ON	ON	ON	**OFF**
240-25F	ON	ON	**OFF**	ON
260-27F	ON	ON	**OFF**	**OFF**
280-29F	ON	**OFF**	ON	ON
2A0-2BF	ON	**OFF**	ON	**OFF**
(*)2C0-2DF	ON	**OFF**	**OFF**	ON
2E0-2EF	ON	**OFF**	**OFF**	**OFF**
300-31F	**OFF**	ON	ON	ON
320-33F	**OFF**	ON	ON	**OFF**
340-35F	**OFF**	ON	**OFF**	ON
360-37F	**OFF**	ON	**OFF**	**OFF**
380-39F	**OFF**	**OFF**	ON	ON
3A0-3BF	**OFF**	**OFF**	ON	**OFF**
3C0-3DF	**OFF**	**OFF**	**OFF**	ON
3E0-3FF	**OFF**	**OFF**	**OFF**	**OFF**

2.2.3 PC's I/O Address Mapping

The PC I/O port mapping is given below:

Address	Device	Address	Device
000-1FF	PC RESERVED	320-32F	XT Hart Dosk
200-20F	Game Port	378-37F	Parallel Port
210-21F	XT Expansion Unit	380-38F	SDLC
238-23F	Bus Mouse	3A0-3AF	SDLC
278-27F	Parallel Port	3B0-3BF	MDA/Parallel Port
2B0-2DF	EGA	3C0-3CF	EGA
2E0-2E7	AT GPIB	3D0-3DF	CGA
2E8-2EF	Serial Port	3E0-3EF	Serial Port
2F8-2EF	Serial Port	3F0-3F7	Floppy Disk
300-31F	Prototype Card	3F8-3FF	Serial Port

2.3 D/A and IRQ Jumper Settings

2.3.1 A-626/A-726 D/A Jumper Settings

The A-626 and A-726 each D/A channel can be configurable. You can set the voltage range for your applications.

The A-626 and A-726 provides -5 V or -10 V internal reference voltage and Unipolar or Bipolar voltage output. Each channel is individually jumper selectable to any ranges.

Jumper Number: JP7, JP9, JP11, JP18 JP17, JP16		
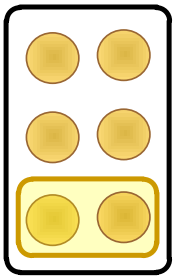 EXT -10 V -5 V	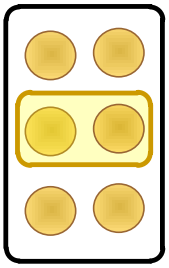 EXT -10 V -5 V	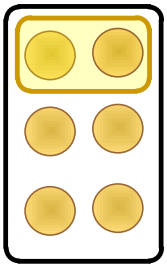 EXT -10 V -5 V
Internal Reference -5 V (Default)	Internal Reference -10 V	External Reference

Jumper Number: JP8, JP10, JP12, JP13, JP14, JP15 JP1, JP2, JP3, JP4, JP5, JP5, JP6	
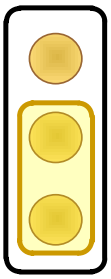 BI: Bipolar UN: Unipolar	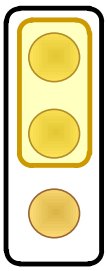 BI: Bipolar UN: Unipolar
Unipolar (Default)	Bipolar

2.3.2 A-628 D/A Jumper Settings

The A-628 each D/A channel can be configurable. You can set the voltage range for your applications.

The A-628 provides -5 V or -10 V internal reference voltage and unipolar or bipolar voltage output. Each channel is individually jumper selectable to any ranges.

Jumper Number: JP1, JP2, JP3, JP4, JP5, JP6, JP7, JP8		
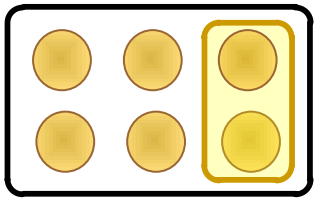 EXT -10V -5V	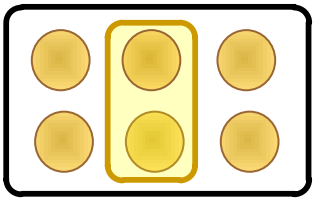 EXT -10V -5V	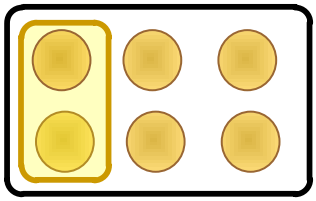 EXT -10V -5V
Internal Reference -5 V (Default)	Internal Reference -10 V	External Reference

Jumper Number: JP9, JP10, JP11, JP12, JP13, JP14, JP15, JP16 JP17, JP18, JP19, JP20, JP21, JP22, JP23, JP24	
BI UN 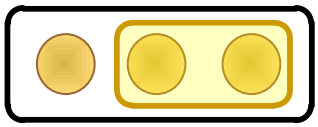	BI UN 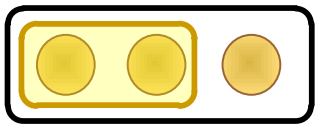
Unipolar (Default)	Bipolar

2.3.3 IRQ Jumper Settings

- **A-626 and A-726 IRQ Jumper:**

Be sure there is no other add-on card in the same interrupt level.

JP19: Interrupt Level Selection
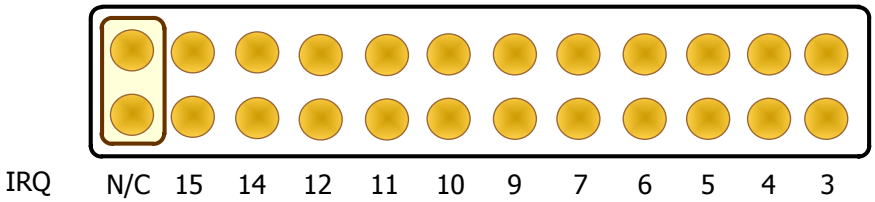
No Interrupt (Default)

- **A-628 IRQ Jumper:**

Be sure there is no other add-on card in the same interrupt level.

JP25: Interrupt Level Selection
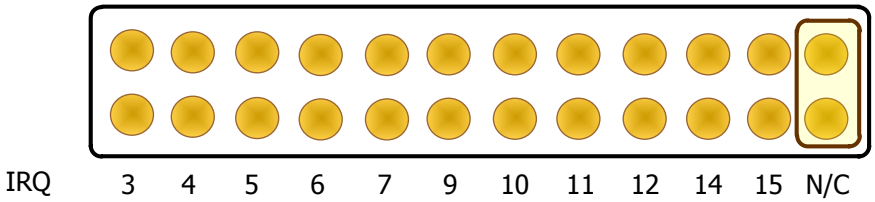
No Interrupt (Default)

2.3.4 Reference Voltage Table

Reference Voltage Table:

Reference Voltage	Unipolar	Bipolar
-5 V Reference	0 ~ 5 V	±5 V
-10 V Reference	0 ~ 10 V	±10 V
External Reference	0~ - (Ext. Reference Voltage)	(Ext. Reference Voltage) ~ -(Ext. Reference Voltage)

Voltage Range Table:

Voltage Range	Reference Voltage	Unipolar/Bipolar
0 ~ 5 V	-5 V	Unipolar
0~10 V	-10 V	Unipolar
± 5 V	-5 V	Bipolar
± 10 V	-10 V	Bipolar
4 ~ 20 mA Current loop	-5 V	unipolar

A-626 and A-726 Jumper Setting Table:

D/A Channel	Corresponding Jumper Unipolar/Bipolar	Corresponding Jumper Reference Voltage
Channel 0	JP 1 & JP 8	JP7
Channel 1	JP 2 & JP10	JP9
Channel 2	JP 3 & JP12	JP11
Channel 3	JP 4 & JP13	JP18
Channel 4	JP 5 & JP14	JP17
Channel 5	JP 6 & JP15	JP16

A-628 Jumper Setting Table:

D/A Channel	Corresponding Jumper Unipolar/Bipolar	Corresponding Jumper Reference Voltage
Channel 0	JP 9 & JP 17	JP1
Channel 1	JP 10 & JP18	JP2
Channel 2	JP 11 & JP19	JP3
Channel 3	JP 12 & JP20	JP4
Channel 4	JP 13 & JP21	JP5
Channel 5	JP 14 & JP22	JP6
Channel 6	JP 15 & JP23	JP7
Channel 7	JP 16 & JP24	JP8

2.4 Pin Assignments

2.4.1 A-626 Pin Assignments

- CON1: Analog Output Connector (37-pin D-type female connector).
- CN3/CN4: Digital Output/Input Connector (20-pin box header).

Pin Assignment	Terminal No.	Terminal No.	Pin Assignment
DA_0 V.OUT	01	20	DA_4 V.OUT
DA_0 Ext REF IN	02	21	DA_4 Ext REF IN
DA_0 I.OUT	03	22	DA_4 I.OUT
A.GND	04	23	A.GND
DA_1 V.OUT	05	24	DA_5 V.OUT
DA_1 Ext REF IN	06	25	DA_5 Ext REF IN
DA_1 I.OUT	07	26	DA_5 I.OUT
A.GND	08	27	A.GND
DA_2 V.OUT	09	28	N/C
DA_2 Ext REF IN	10	29	N/C
DA_2 I.OUT	11	30	N/C
A.GND	12	31	A.GND
DA_3 V.OUT	13	32	N/C
DA_3 Ext REF IN	14	33	N/C
DA_3 I.OUT	15	34	N/C
A.GND	16	35	A.GND
Ext TRG	17	36	A.GND
D.GND	18	37	A.GND
PC +5 V	19		

CON1

Pin Assignment	Terminal No.	Terminal No.	Pin Assignment
DO 0	01	02	DO 1
DO 2	03	04	DO 3
DO 4	05	06	DO 5
DO 6	07	08	DO 7
DO 8	09	10	DO 9
DO 10	10	12	DO 11
DO 12	12	14	DO 13
DO 14	14	16	DO 15
GND	16	18	GND
+5V	18	20	+12V

CN3

Pin Assignment	Terminal No.	Terminal No.	Pin Assignment
DI 0	01	02	DI 1
DI 2	03	04	DI 3
DI 4	05	06	DI 5
DI 6	07	08	DI 7
DI 8	09	10	DI 9
DI 10	11	12	DI 11
DI 12	13	14	DI 13
DI 14	15	16	DI 15
GND	17	18	GND
+5V	19	20	+12V

CN4

DA n V OUT	D/A Voltage Output Channel n
DA n REF IN	D/A External Reference Input Channel n
DA n I OUT	Current Loop Output Channel n
A.GND and D.GND	Analog Ground and Digital Ground
+ 5V	From PC power Supply +5 V

2.4.2 A-726 Pin Assignments

Pin Assign-ment	Terminal No.		Pin Assign-ment
DO 0	01	02	DO 1
DO 2	03	04	DO 3
DO 4	05	06	DO 5
DO 6	07	08	DO 7
DO 8	09	10	DO 9
DO 10	11	12	DO 11
DO 12	12	14	DO 13
DO 14	14	16	DO 15
GND	16	18	GND
+5V	18	20	+12V

CN1

Pin Assign-ment	Terminal No.		Pin Assign-ment
DI 0	01	02	DI 1
DI 2	03	04	DI 3
DI 4	05	06	DI 5
DI 6	07	08	DI 7
DI 8	09	10	DI 9
DI 10	11	12	DI 11
DI 12	12	14	DI 13
DI 14	14	16	DI 15
GND	16	18	GND
+5V	18	20	+12V

CN2

Pin Assign-ment	Terminal No.		Pin Assign-ment
-5V REF OUT	01	02	-10V REF OUT
-5V REF OUT	03	04	-10V REF OUT
DA_0 V.OUT	05	06	DA_0 I.OUT
DA_0 REF IN	07	08	A.GND
DA_1 V.OUT	09	10	DA_1 I.OUT
DA_1 REF IN	11	12	A.GND
DA_2 V.OUT	12	14	DA_2 I.OUT
DA_2 REF IN	14	16	A.GND
A.GND	16	18	A.GND
N.C.	18	20	N.C.

CN3

Pin Assign-ment	Terminal No.		Pin Assign-ment
DA_3 V.OUT	01	02	DA_3 I.OUT
DA_3 REF IN	03	04	A.GND
DA_4 V.OUT	05	06	DA_4 I.OUT
DA_4 REF IN	07	08	A.GND
DA_5 V.OUT	09	10	DA_5 I.OUT
DA_5 REF IN	11	12	A.GND
A.GND	12	14	A.GND
D.GND	14	16	D.GND
+5V	16	18	+5V
+12V	18	20	+12V

CN4

DA n V OUT	D/A Voltage Output Channel n
DA n REF IN	D/A External Reference Input Channel n
DA n I OUT	Current Loop Output Channel n
A.GND and D.GND	Analog Ground and Digital Ground
+ 5V	From PC power Supply +5 V
+12V	From PC power Supply +12 V

2.4.3 A-628 Pin Assignments

- CN1: Analog Output Connector (37-pin D-type female connector).
- CN2/CN3: Digital Output/Input Connector (20-pin box header).

Pin Assignment	Terminal No.		Pin Assignment
DA_0 V.OUT	01	20	DA_4 V.OUT
DA_0 Ext REF IN	02	21	DA_4 Ext REF IN
DA0 I.OUT	03	22	DA_4 I.OUT
A.GND	04	23	A.GND
DA_1 V.OUT	05	24	DA_5 V.OUT
DA_1 Ext REF IN	06	25	DA_5 Ext REF IN
DA_1 I.OUT	07	26	DA_5 I.OUT
A.GND	08	27	A.GND
DA_2 V.OUT	09	28	DA_6 V.OUT
DA_2 Ext REF IN	10	29	DA_6 Ext REF IN
DA_2 I.OUT	11	30	DA_6 I.OUT
A.GND	12	31	A.GND
DA_3 V.OUT	13	32	DA_7 V.OUT
DA_3 Ext REF IN	14	33	DA_7 Ext REF IN
DA_3 I.OUT	15	34	DA_7 I.OUT
A.GND	16	35	A.GND
Ext TRG	17	36	A.GND
D.GND	18	37	A.GND
PC +5V	19		

CN1

Pin Assignment	Terminal No.		Pin Assignment
DI 0	01	02	DI 1
DI 2	03	04	DI 3
DI 4	05	06	DI 5
DI 6	07	08	DI 7
DI 8	09	10	DI 9
DI 10	11	12	DI 11
DI 12	13	14	DI 13
DI 14	15	16	DI 15
GND	17	18	GND
+5V	19	20	+12V

CN2

Pin Assignment	Terminal No.		Pin Assignment
DO 0	01	02	DO 1
DO 2	03	04	DO 3
DO 4	05	06	DO 5
DO 6	07	08	DO 7
DO 8	09	10	DO 9
DO 10	10	12	DO 11
DO 12	12	14	DO 13
DO 14	14	16	DO 15
GND	16	18	GND
+5V	18	20	+12V

CN3

DA n V OUT	D/A Voltage Output Channel n
DA n REF IN	D/A External Reference Input Channel n
DA n I OUT	Current Loop Output Channel n
A.GND and D.GND	Analog Ground and Digital Ground
+ 5V	From PC power Supply +5 V

2.5 Signal Connection

2.5.1 Voltage Output

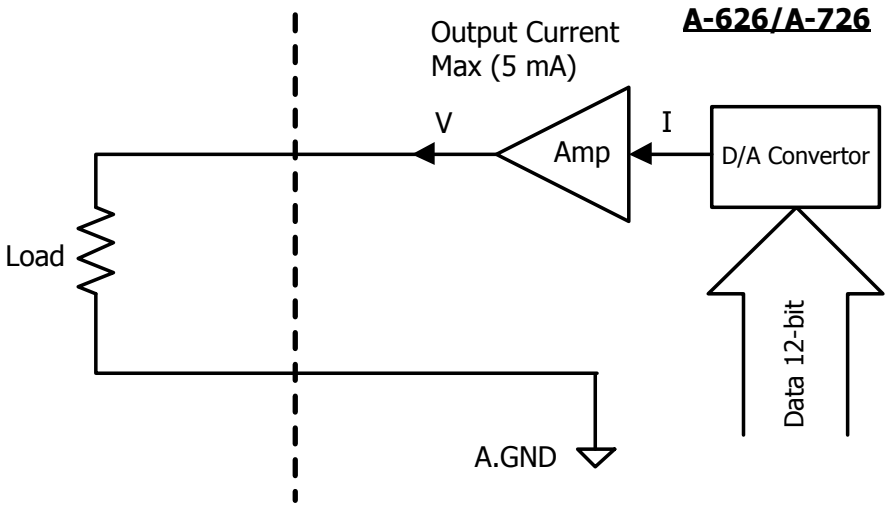

The A-626/A-726 D/A Voltage Output Maximum Current : 5 mA

2.5.2 Current Loop

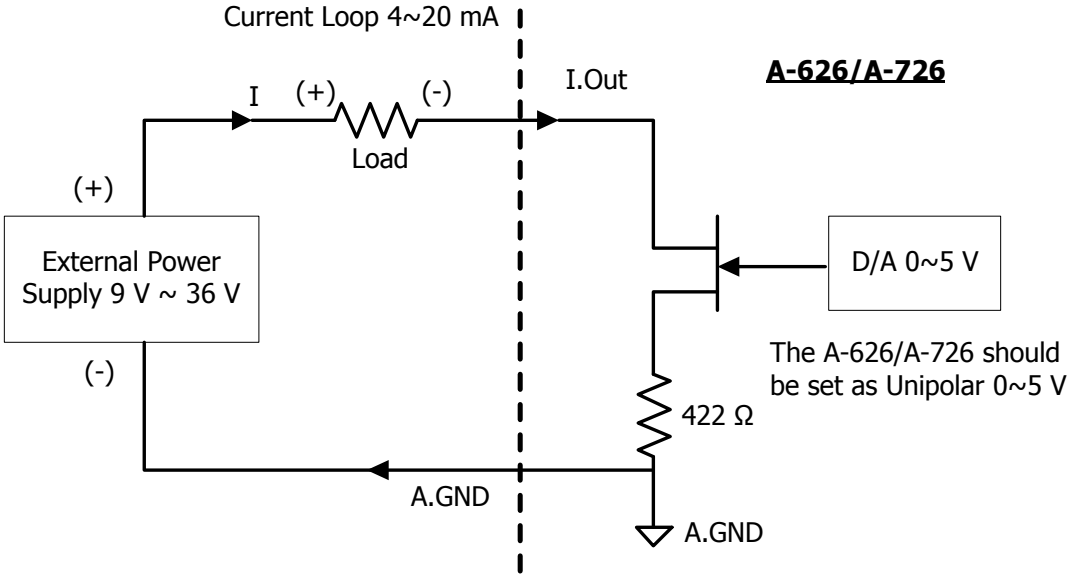

3. Software Installation

The A-626, A-628 and A-726 series card can be used in DOS, Linux and Windows 98/NT/2K and 32-bit Windows XP/2003/Vista/7. This chapter shows you the detail steps to install these drivers.

Follow these steps:

Step 1: Run the companion CD.

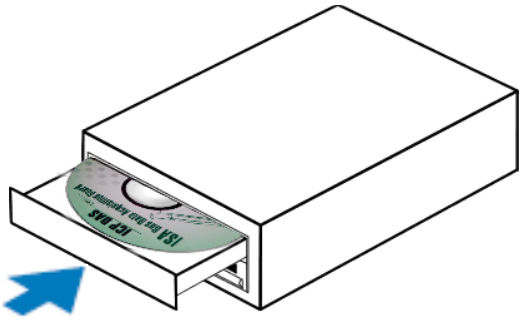

Insert the companion CD into the CD-ROM driver and wait a few seconds until the installation program starts automatically. If it does not start automatically for some reason, then please double-click the file **\NAPDOS\AUTO32.EXE** on the CD.

Step 2: Click the item:
Install Toolkits (Software)/Manuals.

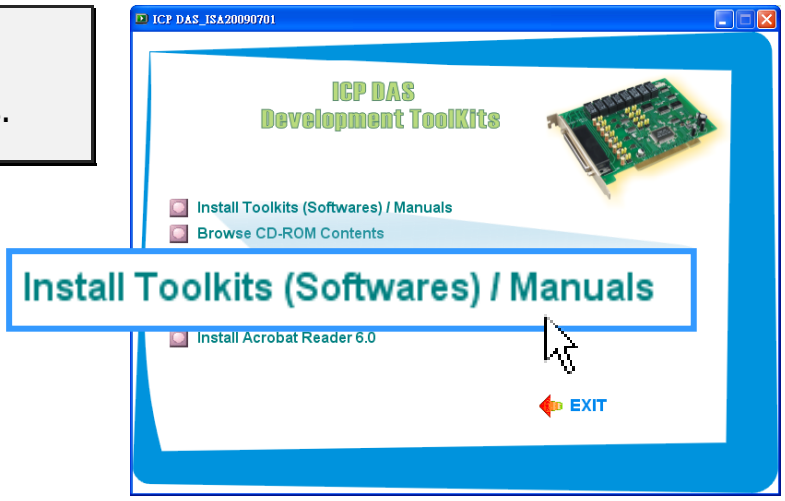

Step 3: Click the item:
ISA Bus DAQ Card.

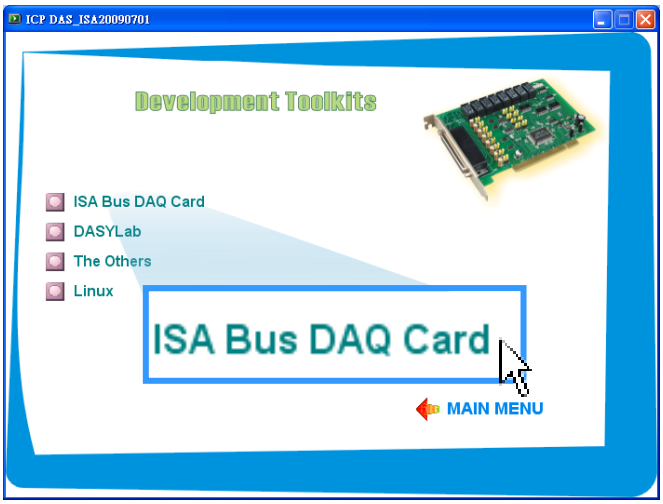

Step 4: Click the item:
A-626/A-628.

This driver supports A-626, A-628 and A-726 series cards.

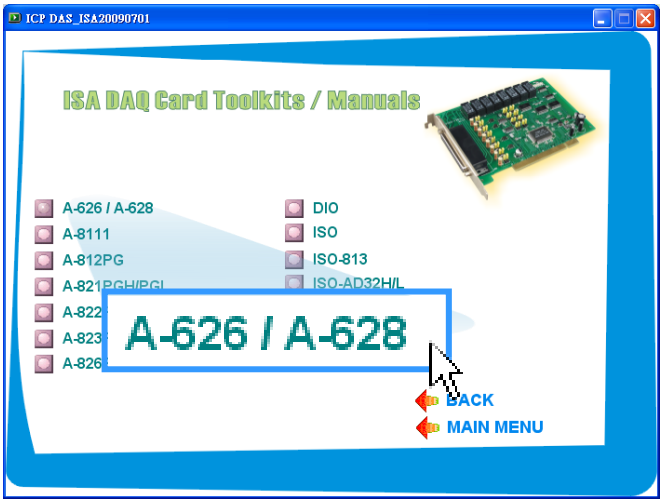

Step 5: Click the item: Install Toolkit for Windows NT/2000.

Please install the appropriate driver for your OS.

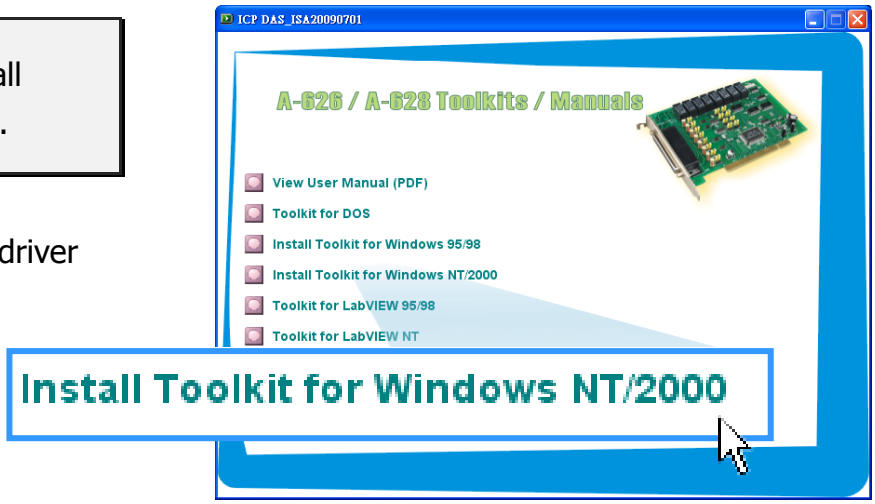

Step 6: Click the **"Next>"** button to start the installation.

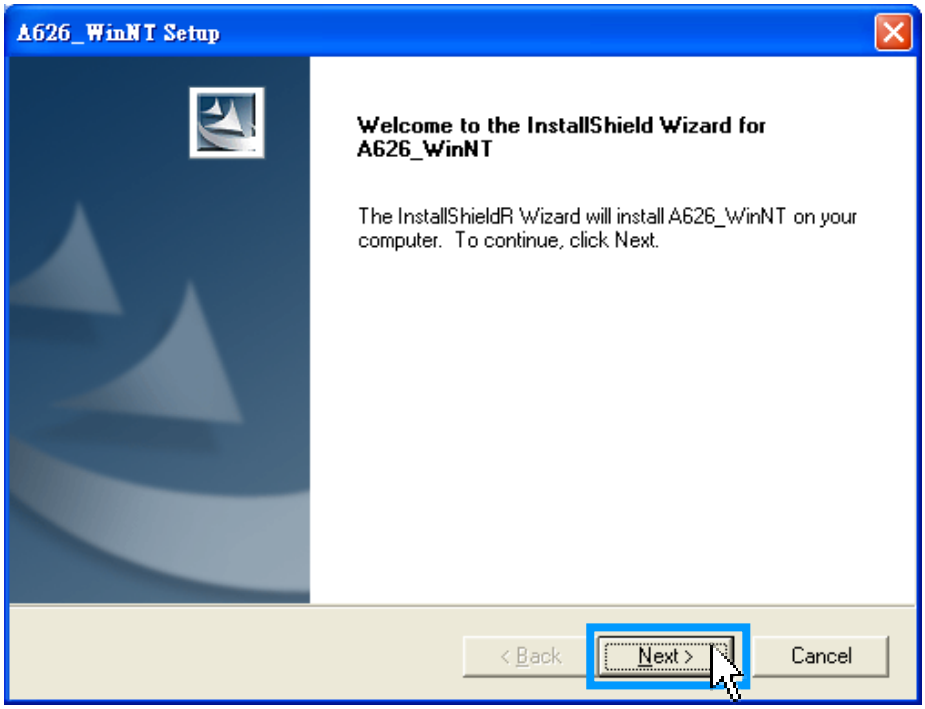

Step 7: Select the installed folder, the default path is C:\DAQPro\A626_WinNT, confirm and click the **"Next>"** button.

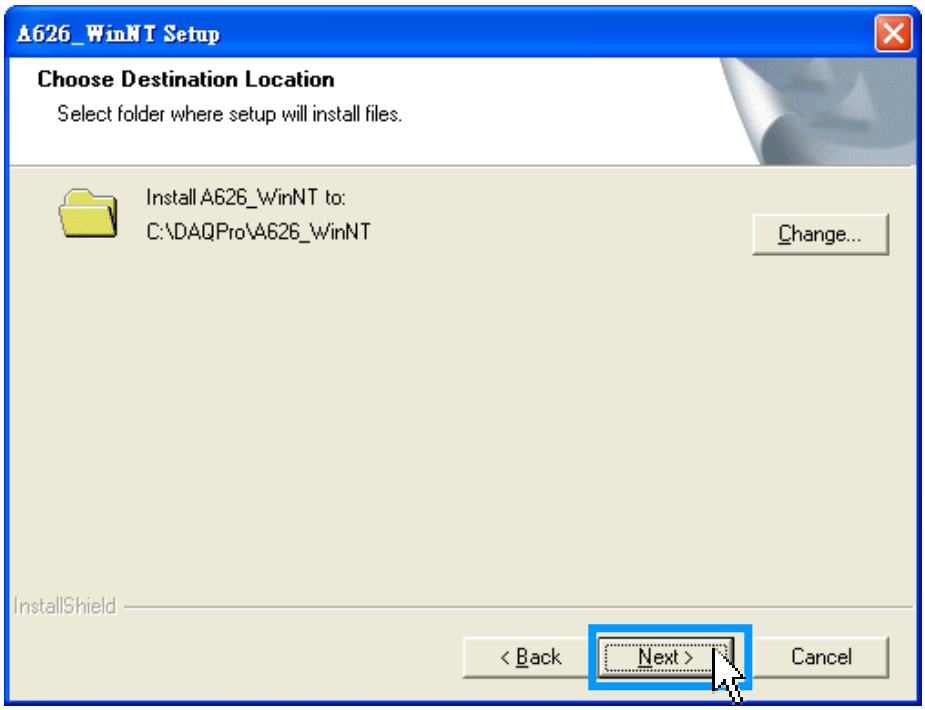

Step 8: Selection **"No, I will restart my computer later"** and then click the **"Finish"** button.

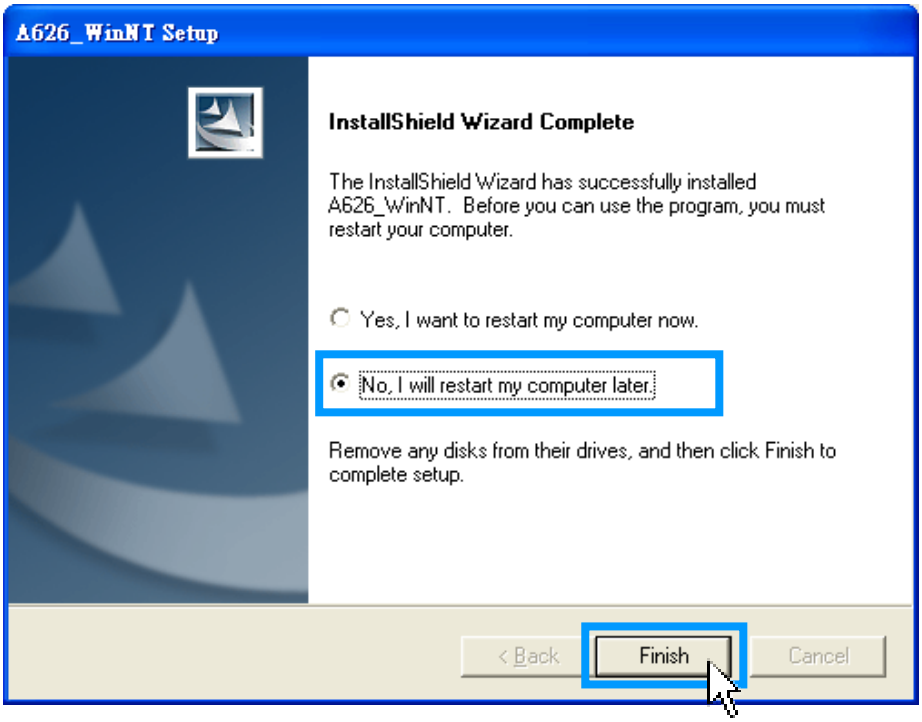

Step 9: After clicking the **"Finish"** button, please refer to **Chapter 4** continues to complete the installation.

4. Hardware Installation

To install you're ISA series card, complete the following steps:

Step 1: Installing A-626/628/726 series card driver on your computer first.

For detailed information about the driver installation, please refer to Chapter 3 Software Installation.

Step 2: Configuring I/O address, D/A channel and IRQ by the S1 Switch and jumper.

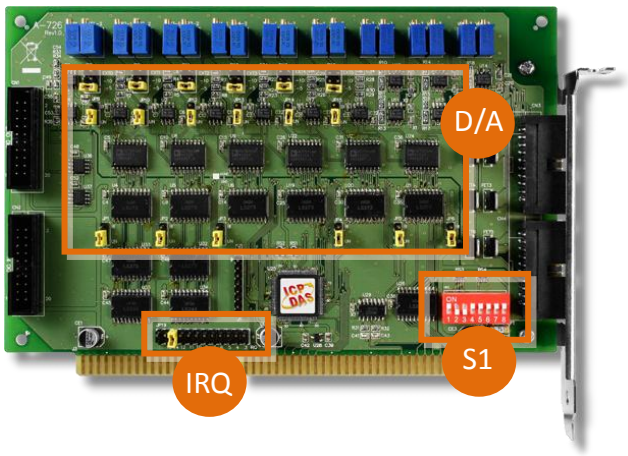

For detailed information about the I/O address, D/A channel and IRQ settings, please refer to Sec. 2.2 and Sec.2.3.

Step 3: Shut down and power off your computer.

Step 4: Remove all covers from the computer.

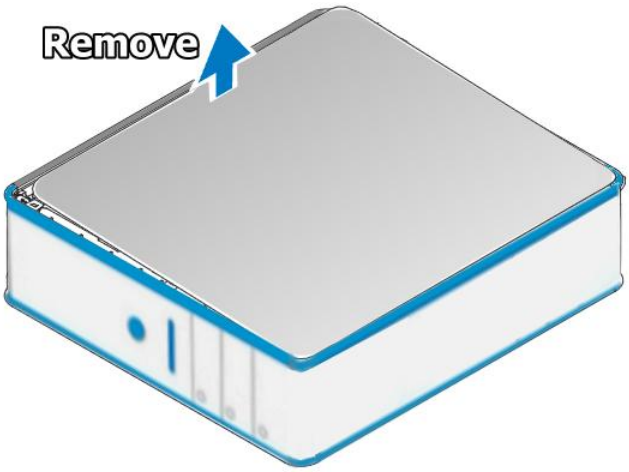

Step 5: Select an empty ISA slot.

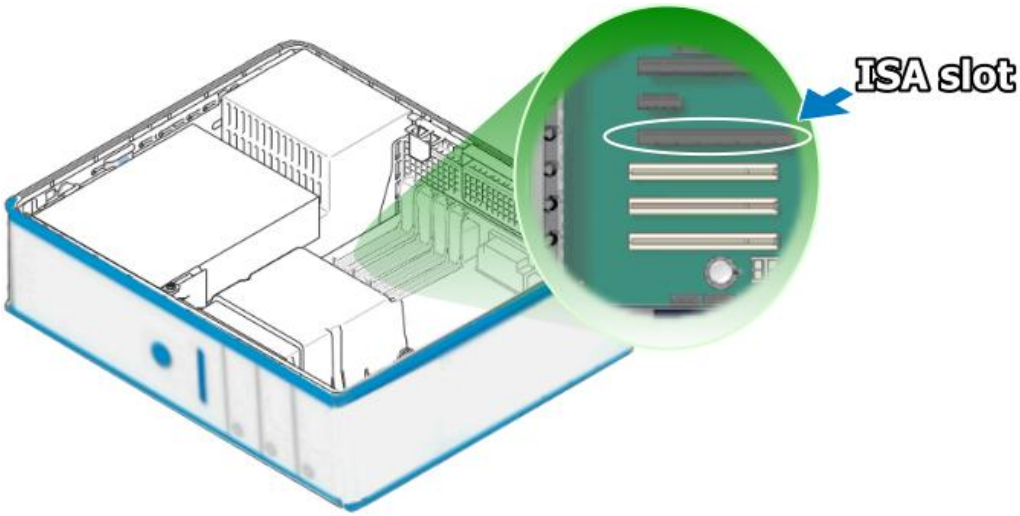

Step 6: Remove the ISA slot cover form the PC.

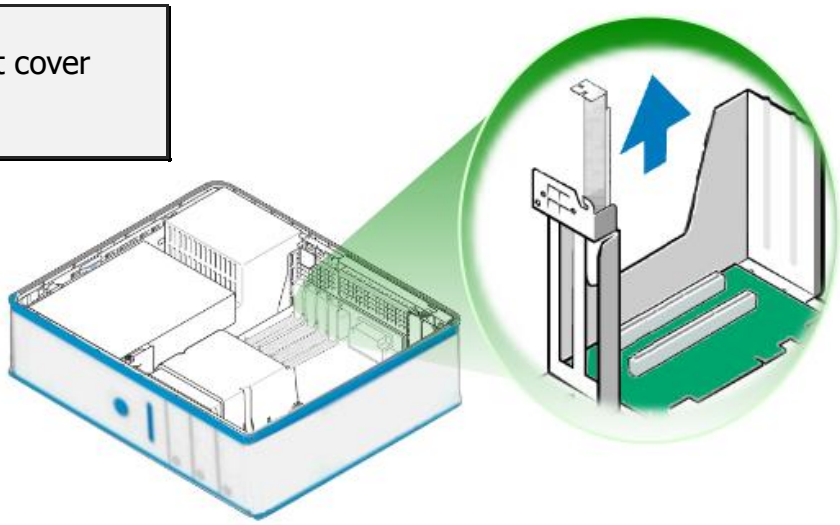

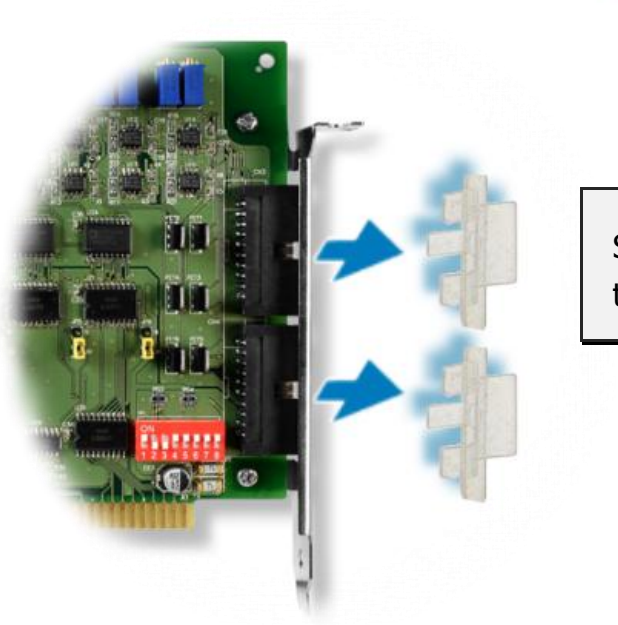

Step 7: Remove the connector cover form the A-626/628/726 series card.

Step 8: Carefully insert you're card into the ISA slot.

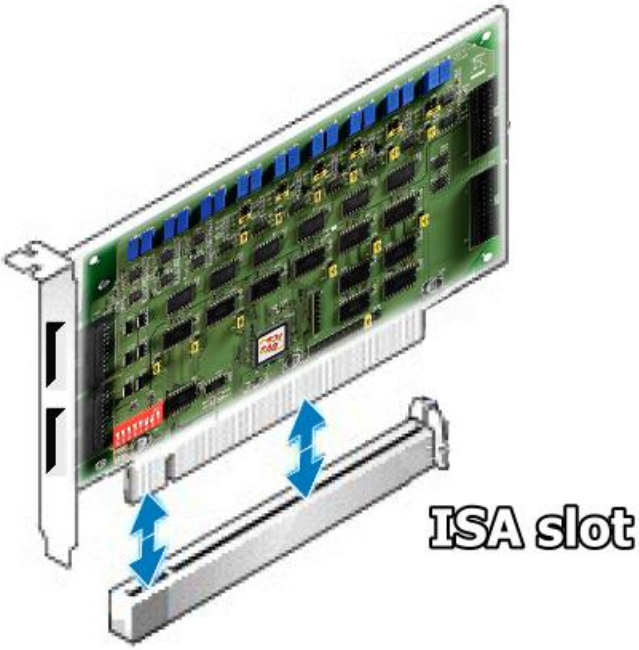

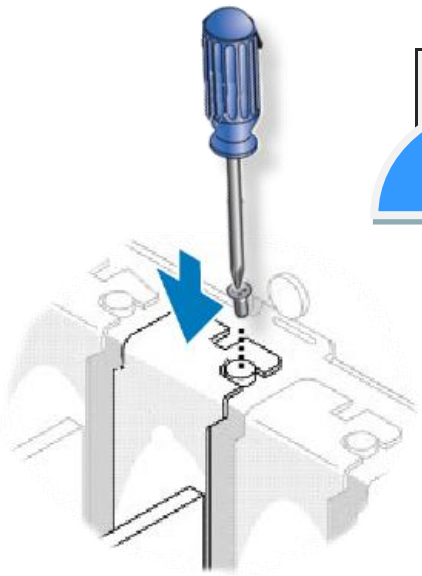

Step 9: Tighten the captive Phillips screw.

Confirm A-626, A-628 and A-726 series card is mounted on the motherboard.

Step 10: Replace the computer cover.

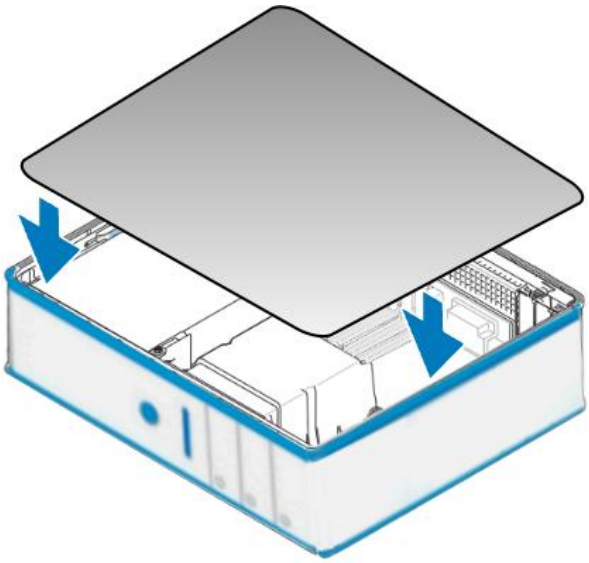

Step 11: Power on the computer.

5. Testing A-626/628/726 Series Card

This chapter can give you the detail steps about self-test. In this way, user can confirm that A-626, A-628 and A-726 series card well or not. Before the self-test, you must complete the hardware and driver installation. For detailed information about the hardware and driver installation, please refer to Chapter 3 Software Installation and Chapter 4 Hardware Installation.

5.1 DIO Wiring Test

1. Prepare for device:
   - CA-2002 cable (optional).

2. Use the CA-2002 to connect the digital input with digital output. For detail D/I and D/O channel of the A-626, A-628 and A-726, please refer to below table.

	A-626	A-628	A-726
D/I	CN4	CN2	CN2
D/O	CN3	CN3	CN1

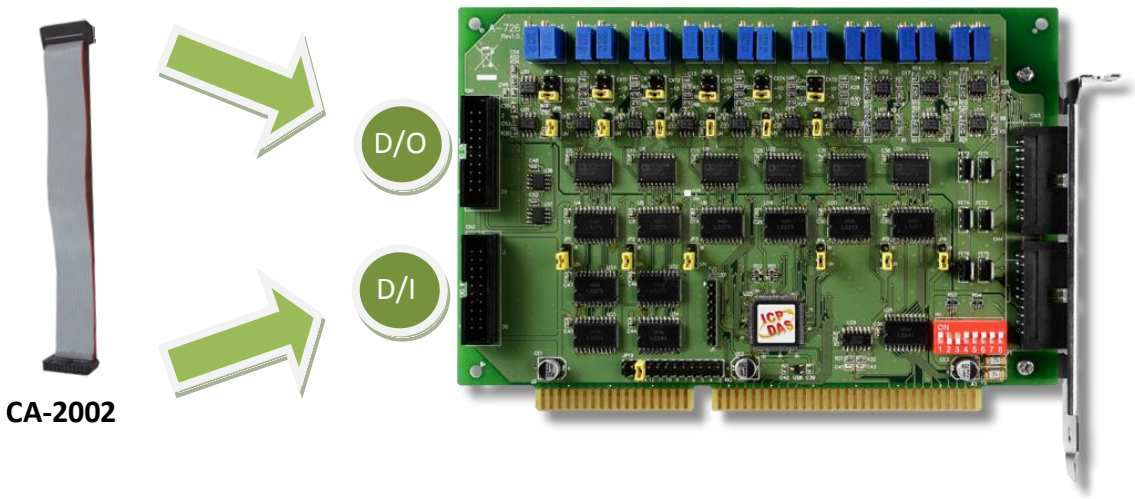

5.2 Analog Output Wiring Test

1. Prepare for device:
   - DN-37 (optional) Wiring terminal board and CA-3710 cable (optional) for A-626 and A-628 only.
   - DN-20 (optional) Wiring terminal board and CA-2002 cable (optional) for A-726 only.
   - Digital Multi-Meter.

2. Make sure D/A reference voltage jumper, IRQ interrupt jumper and SW1 is kept in default setting. Please refer to Sec. 2.2 and Sec. 2.3.

■ *A-626 and A-628:*

3. Use the DN-37 to connect the CON1 or CN1 on the A-626 or A-628 card.

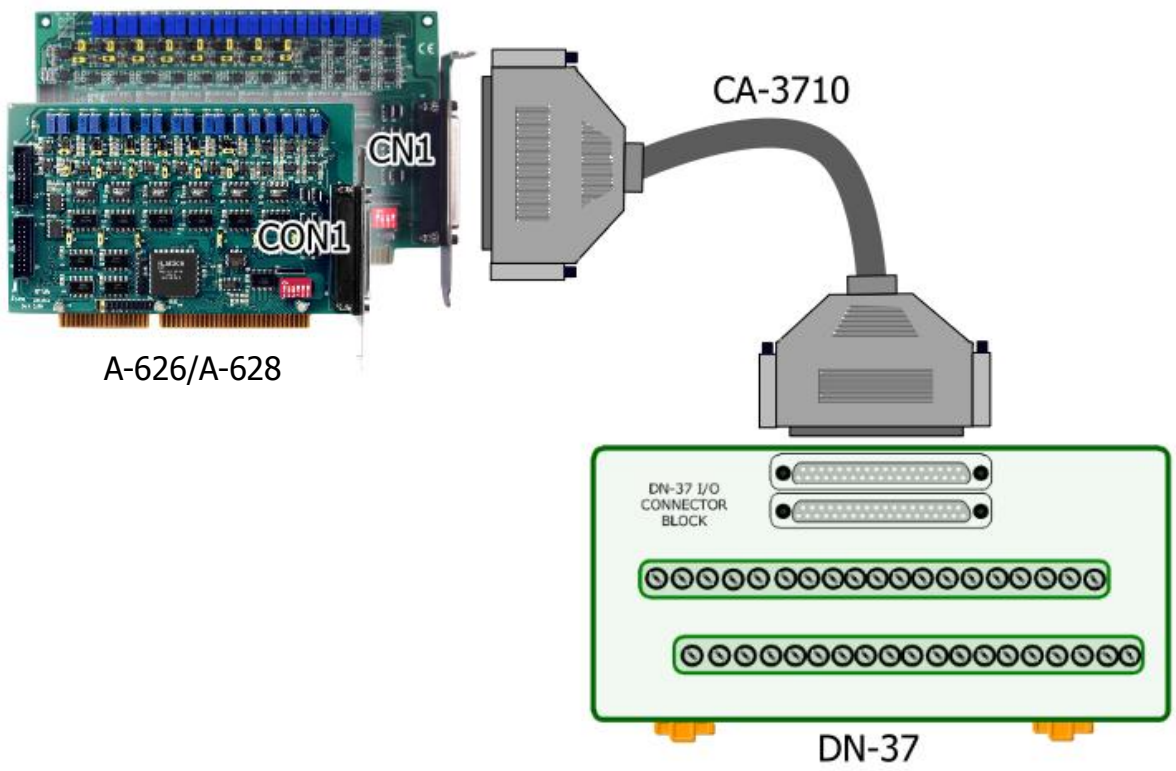

4. Wire the Multi-meter to D/A channel 0, and wire the signals as follows:

   Connect the **positive probe (+) of Multi-meter** to **DA_0 V.OUT (Pin 01)**, and then the **negative probe (-) of Multi-meter** to **A.GND (Pin 04)**.

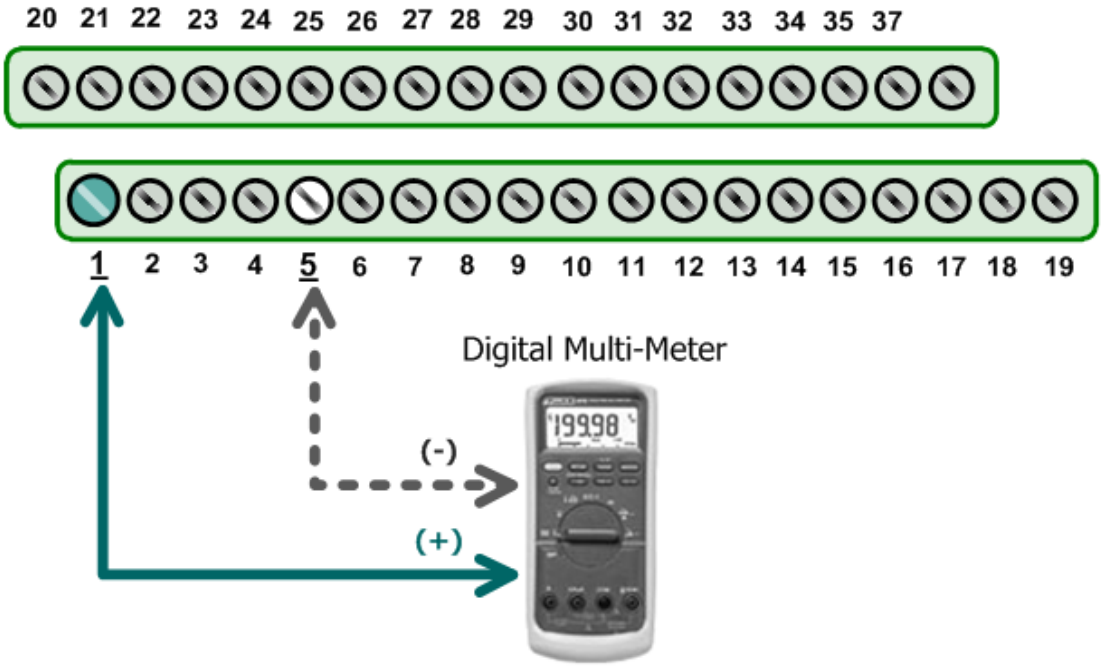

■ *A-726:*

3. Use DN-20 wiring terminal board to connect the CN3 on the A-726 card.

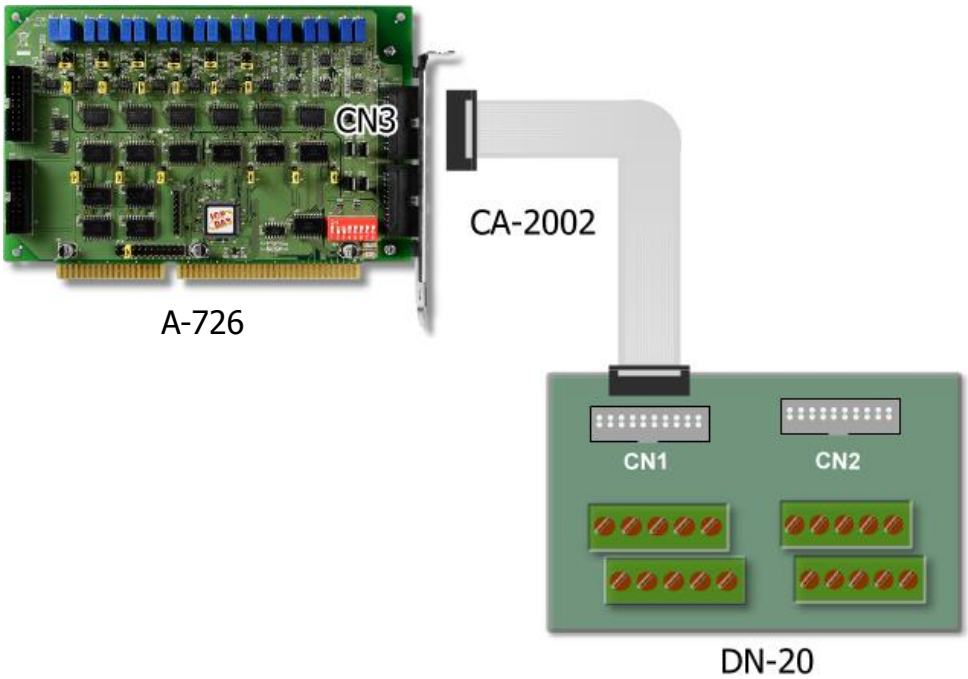

4. Wire the Multi-meter to D/A channel 0, and wire the signals as follows:

   Connect the **positive probe (+) of Multi-meter** to **DA_0 V.OUT (Pin 05)**, and then the **negative probe (-) of Multi-meter** to **A.GND (Pin 16)**.

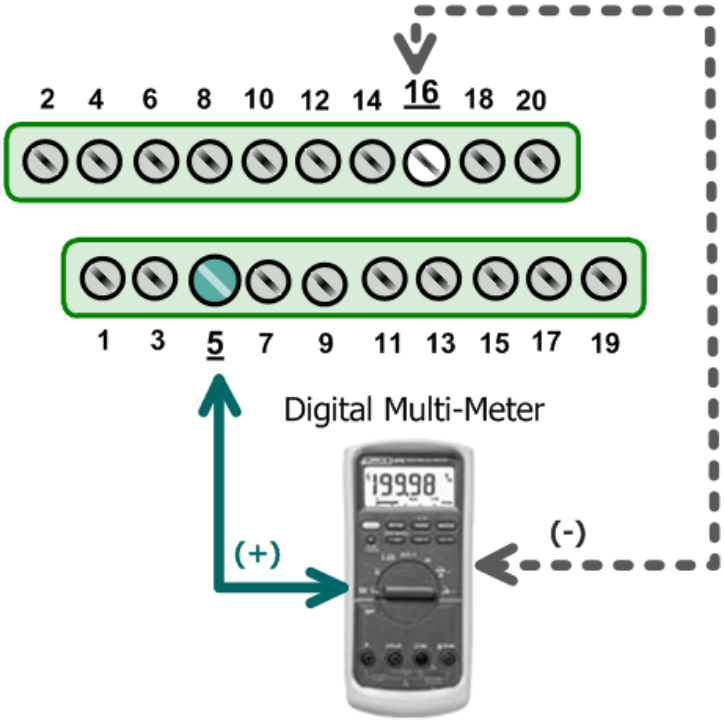

5.3 Execute the Test Program

1. Execute the A62xDiag.exe program. The A62xDiag.exe will be placed in the default path after completing installation.

A62xDiag.exe	**Support ISA Card**
A626Diag.exe	For A-626 and A-726 series card
A628Diag.exe	For A-628 series card

Default Path: C:\DAQPro\A626_WinNT\Diag\
Double click the "A62xDiag.exe"

2. Execute to DIO and Analog Output function test.

(1): Type the base address for the A-626/A-628/A-726 to activate. (e.g. BaseAddr:2C0)
(Meet to SW1 setting on board, please refer to Sec. 2.2)

(2): Click channel 0, 2, 4, 6 in the Digital Output Set field.

(3): Select the appropriate D/A voltage range in the Hardware Set file. (e.g. 0 to 5V)
(Meet to D/A jumper setting on board, please refer to Sec 2.3)

(4): Type the voltage value in the Output Val field.

(5): Click this button to start test.

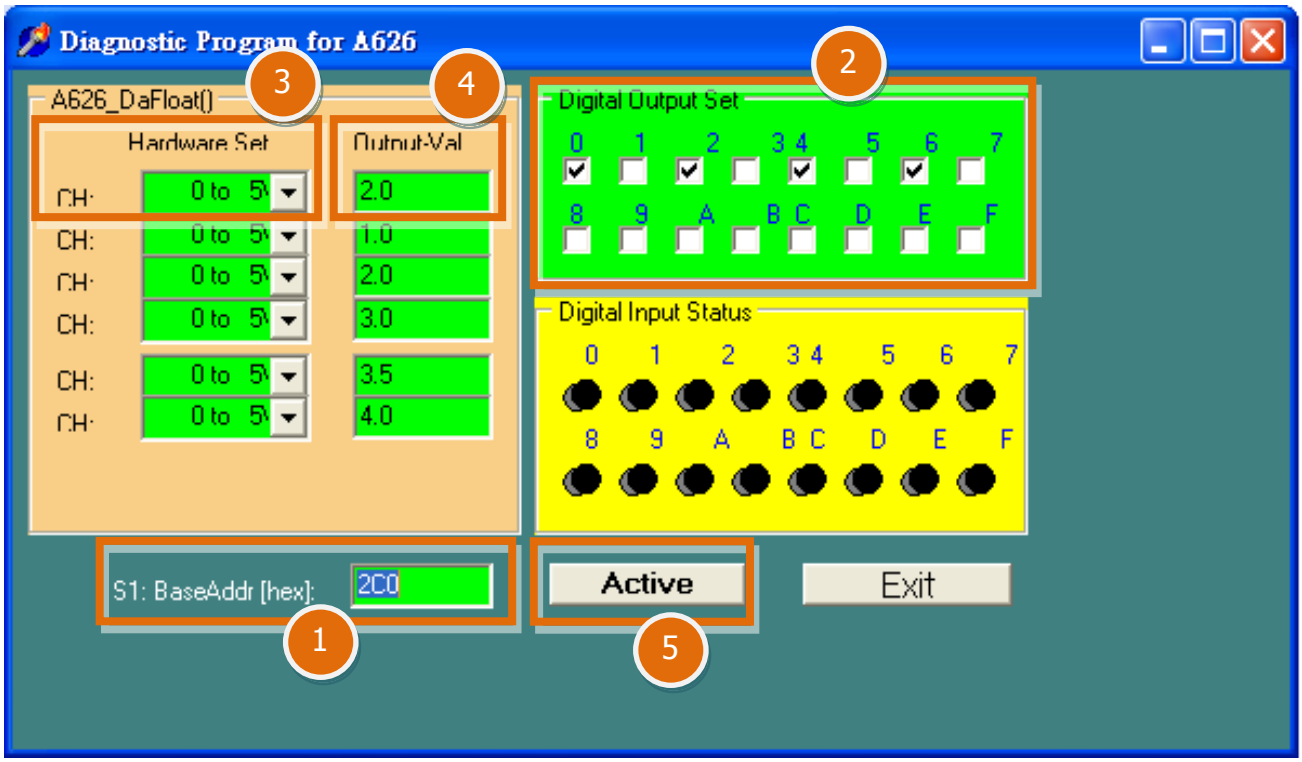

3. Get DIO and Analog Output function test result.

(6): Confirm the corresponding D/I becomes red for channel 0, 2, 4, 6 of D/O is ON.

(7): Confirm the value on multi-meter, they should be identical to the values set in program.

(The value read on meter may be a little difference from the DA value because of the resolution limit of meter or the measurement error.)

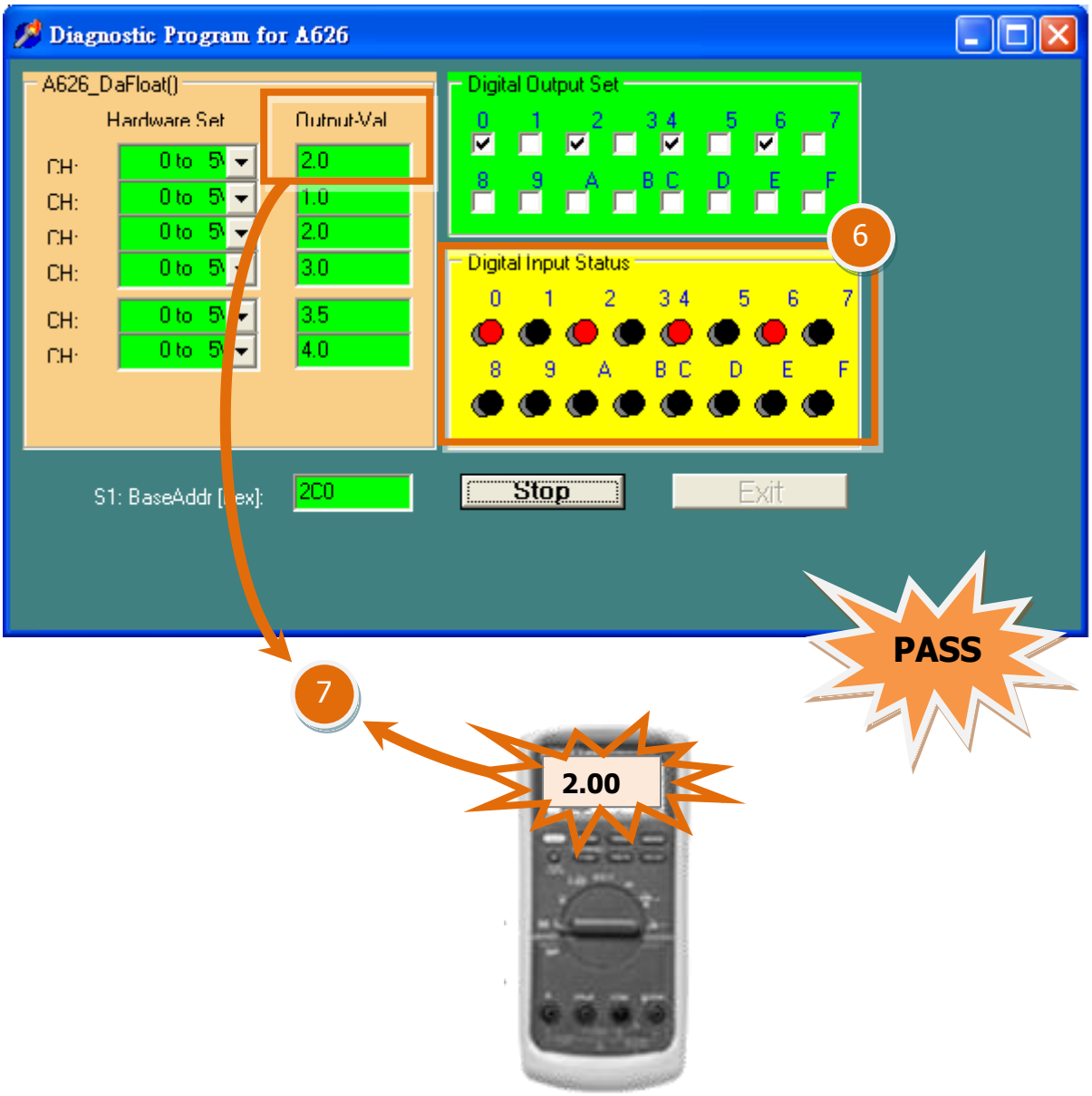

6. Programming

6.1 I/O Port Address

■ A-626 and A-726 I/O Port Address:

Address	Function	Read/Write
Base+0x0	D/A CH0 High Byte	Write
Base+0x1	D/A CH0 Low Byte	Write
Base+0x2	D/A CH1 High Byte	Write
Base+0x3	D/A CH1 Low Byte	Write
Base+0x4	D/A CH2 High Byte	Write
Base+0x5	D/A CH2 Low Byte	Write
Base+0x6	D/A CH3 High Byte	Write
Base+0x7	D/A CH3 Low Byte	Write
Base+0x8	D/A CH4 High Byte	Write
Base+0x9	D/A CH4 Low Byte	Write
Base+0xA	D/A CH5 High Byte	Write
Base+0xB	D/A CH5 Low Byte	Write
Base+0xC	D/O Bit 8-15	Write
Base+0xD	D/O Bit 0-7	Write
Base+0xE	D/I Bit 8-15	Read
Base+0xF	D/I Bit 0-7	Read

A-628 I/O Port Address:

Address	Function	Read/Write
Base+0x0	D/A CH0 High Byte	Write
Base+0x1	D/A CH0 Low Byte	Write
Base+0x2	D/A CH1 High Byte	Write
Base+0x3	D/A CH1 Low Byte	Write
Base+0x4	D/A CH2 High Byte	Write
Base+0x5	D/A CH2 Low Byte	Write
Base+0x6	D/A CH3 High Byte	Write
Base+0x7	D/A CH3 Low Byte	Write
Base+0x8	D/A CH4 High Byte	Write
Base+0x9	D/A CH4 Low Byte	Write
Base+0xA	D/A CH5 High Byte	Write
Base+0xB	D/A CH5 Low Byte	Write
Base+0xC	D/A CH6 High Byte	Write
Base+0xD	D/A CH6 Low Byte	Write
Base+0xE	D/A CH7 High Byte	Write
Base+0xF	D/A CH7 Low Byte	Write
Base+0x10	D/I/O Bit 0-7	Read/ Write
Base+0x11	D/I/O Bit 8-15	Read/ Write

6.2 D/A Register

A-626 and A-726 D/A Register:

D/A Channel	High Byte Address	Low Byte Address
0	Base+0x0	Base+0x1
1	Base+0x2	Base+0x3
2	Base+0x4	Base+0x5
3	Base+0x6	Base+0x7
4	Base+0x8	Base+0x9
5	Base+0xA	Base+0xB

A-628 D/A Register:

D/A Channel	High Byte Address	Low Byte Address
0	Base+0x0	Base+0x1
1	Base+0x2	Base+0x3
2	Base+0x4	Base+0x5
3	Base+0x6	Base+0x7
4	Base+0x8	Base+0x9
5	Base+0xA	Base+0xB
6	Base+0xC	Base+0xD
7	Base+0xE	Base+0xF

6.3 Data Register

12-bit D/A Data Format:

D/A Low Byte							
Bit 7	Bit 6	Bit 5	Bit 4	Bit 3	Bit 2	Bit 1	Bit 0
D7	D6	D5	D4	D3	D2	D1	D0

D/A High Byte							
Bit 7	Bit 6	Bit 5	Bit 4	Bit 3	Bit 2	Bit 1	Bit 0
X	X	X	X	D11	D10	D9	D8

Note: You should be written the high byte data first then write low byte data.

Example: (Basic Language)

```
Bas=&h2c0
OUT bas+0,&H80          'send High byte
OUT bas+1,&H0           'send Low byte
                        'Unipolar 0 ~ 5 V D/A Channel 0 will output 2.5 V
```

High Byte Data								Low Byte Data							
D7	D6	D5	D4	D3	D2	D1	D0	D7	D6	D5	D4	D3	D2	D1	D0
X	X	X	X	11	10	9	8	7	6	5	4	3	2	1	0

0x000	0	0	0	0	0	0	0	0	0	0	0	0
0x800	1	0	0	0	0	0	0	0	0	0	0	0
0xFFF	1	1	1	1	1	1	1	1	1	1	1	1

12 Bit Data

Output Range	Output Voltage	Binary Code	Hex.	Dec.
	5 V	1111 1111 1111	FFF	4095
0 ~ 5 V	2.5 V	1000 0000 0000	800	2048
(Unipolar)	0 V	0000 0000 0000	0	0
	10 V	1111 1111 1111	FFF	4095
0 ~ 10 V	5 V	1000 0000 0000	800	2048
(Unipolar)	0 V	0000 0000 0000	0	0
	5 V	1111 1111 1111	FFF	4095
±5 V	0 V	1000 0000 0000	800	2048
(Bipolar)	-5 V	0000 0000 0000	0	0
	10 V	1111 1111 1111	FFF	4095
±10 V	0 V	1000 0000 0000	800	2048
(Bipolar)	-10 V	0000 0000 0000	0	0
	20 mA	1111 1111 1111	FFF	4095
4 ~ 20 mA	12 mA	1000 0000 0000	800	2048
(Current Loop)	4 mA	0000 0000 0000	0	0

0 V (0 ~ 5 V)	2.5 V	5 V
0 V (0 ~ 10 V)	5 V	10 V
-5 V (±5 V)	0 V	+5 V
-10 V (±10 V)	0 V	+10 V
4 mA (4 ~ 20 mA)	12 mA	20 mA

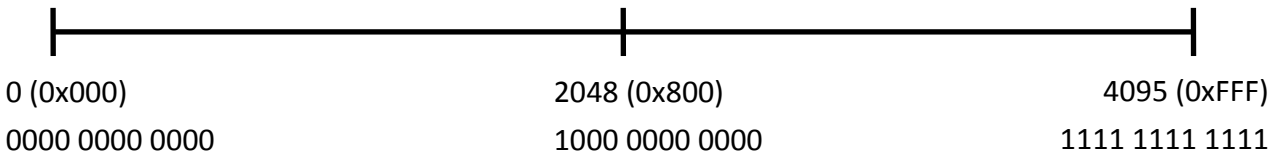

12 bit Data Format

Calculation:

VD = High Byte x 256 + Low Byte

Unipolar :

VD = 2050 (Dec.) Converted Data
High Byte = 8 , Low Byte = 2
Output Range : 0 ~ 5 V
Voltage Output = 5 (V)X 2050 / 4095 = 2.503 (V)

Bipolar :

Coveted Data = 1024 (Dec.)
High Byte = 4 , Low Byte = 0
Output Range = ±10 V
Voltage Output = 5 (V) X (1024-2048)/2048= - 2.4926 (V)

Current Loop:
Coveted Data = 3076 (Dec.)
High Byte = 12 , Low Byte = 4
Output Range = 4 ~ 20 mA
Current Sink = ((20-4) X 3076/4095)+ 4=16.0185 (mA)

Example Program : (Quick Basic)

```
BasAddress=&H2C0                    ` A-626/628/726 Base Address
RefVol=5                            ` Reference Voltage = -5 V ( Unipolar 0 ~ 5 V )
Vo = 3.5                            ` Output 3.5 V

Vd = int(Vo*4095/Refvol)            ` Conversion Binary Data
HighByte = int(Vd/256)              ` High Byte Data
LowByte = Vd - HighByte*256         ` Low Byte Data

OUT ( BasAddress + 0 , HighByte)    ` Write high byte data first
OUT ( BasAddress + 1 , LowByte)     ` Then low byte data to D/A channel 0
```

6.4 Digital Input/Output Register

■ A-626/A-726 Digital Input/Output Register

Address	Write	Read
Base + 0x0C	Digital Output Channel 0 ~ 7	Digital Input Channel 0 ~ 7
Base + 0x0D	Digital Output Channel 8 ~ 15	Digital Input Channel 8 ~ 15

Digital Input/Output Data Format

Bit	7	6	5	4	3	2	1	0
Base + C	DO15	DO14	DO13	DO12	DO11	DO10	DO9	DO8
Base + D	DO7	DO6	DO5	DO4	DO3	DO2	DO1	DO0
Base + C	DI15	DI14	DI13	DI12	DI11	DI10	DI9	DI8
Base + D	DI7	DI6	DI5	DI4	DI3	DI2	DI1	DI0

■ A-628 Digital Input/Output Register

Address	Write	Read
Base + 0x10	Digital Output Channel 0 ~ 7	Digital Input Channel 0 ~ 7
Base + 0x11	Digital Output Channel 8 ~ 15	Digital Input Channel 8 ~ 15

Digital Input/Output Data Format

Bit	7	6	5	4	3	2	1	0
Base + 0x10	DO 7	DO 6	DO 5	DO 4	DO 3	DO 2	DO 1	DO 0
Base + 0x11	DO 15	DO 14	DO 13	DO 12	DO 11	DO 10	DO 9	DO 8
Base + 0x10	DI 7	DI 6	DI 5	DI 4	DI 3	DI 2	DI 1	DI 0
Base + 0x11	DI 15	DI 14	DI 13	DI 12	DI 11	DI 10	DI 9	DI 8

Digital Input/Output Example program.

A-626/A-726 For Basic Language

```
Bas = &H2C0
Out Bas + &HC , &HFF        ` Write Data to Channel 0 ~ 7 of Digital Output
Out Bas + &HD , &HFF        ` Write Data to Channel 8 ~ 15 of Digital Output

DIL = INP(Bas + &HC)        ` Read Channel 0 ~ 7 of Digital Input
DIL = INP(Bas + &HD)        ` Read Channel 8 ~ 15 of Digital Input
```

7. Calibration

7.1 A-626/A-726 Calibration

The each channel of A-626 and A-726 has three VR can be adjust to current value.

D/A Channel	Unipolar Full Scale	Bipolar Off-set	Current loop 4 mA
0	VR1-2	VR1-1	VR1-3
1	VR2-2	VR2-1	VR2-3
2	VR3-2	VR3-1	VR3-3
3	VR4-2	VR4-1	VR4-3
4	VR5-2	VR5-1	VR5-3
5	VR6-2	VR6-1	VR6-3

Calibration Step:

A. Unipolar (0 ~ 5 V)

1. You need a 6 1/2 digital voltage meter.
2. Set D/A channel: (1) Unipolar mode. (2) Reference Voltage : -5 V
3. Connect DVM to D/A Channel 0
4. Write 0xFFF (Hex) Data to D/A Channel 0
5. Trim VR1-2 until the DVM reading 4.9988 V

B. Bipolar (±5 V)

1. Set D/A channel: (1) Bipolar mode. (2) Reference Voltage : -5 V
2. Connect DVM to D/A Channel 0
3. Write 0x800 (Hex) Data to D/A Channel 0
4. Trim VR1-1 untill the DVM reading 0.0000 V
5. Write 0xFFF (Hex) to D/A Channel 0
6. Trim VR1-2 until the DVM reading 4.9988 V

C. Current loop 4 ~ 20 mA

1. Set D/A Channel : (1) Unipolar mode . (2) Reference Voltage : -5 V
2. Ref. Sec. 2.5 signal connection connect DAM to current loop channel
3. Write 0x000 (Hex) to D/A Channel 0
4. Trim VR1-3 until the DAM reading 4.0000 mA
5. Write 0xFFF (Hex) to D/A Channel 0
   Trim VR1-2 until the DAM reading 20 mA

7.2 A-628 Calibration

The each channel of A-628 has three VR can be adjust to current value.

D/A Channel	Unipolar Full Scale	Bipolar Off-set	Current loop 4 mA
0	VR1-2	VR1-1	VR1-3
1	VR2-2	VR2-1	VR2-3
2	VR3-2	VR3-1	VR3-3
3	VR4-2	VR4-1	VR4-3
4	VR5-2	VR5-1	VR5-3
5	VR6-2	VR6-1	VR6-3
6	VR7-2	VR7-1	VR7-3
7	VR8-2	VR8-1	VR8-3

Calibration Step:

A. Unipolar (0 ~ 5 V)

1. You need a 6 1/2 digital voltage meter.
2. Set D/A channel : (1) Unipolar mode. (2) Reference Voltage : -5 V
3. Connect DVM to D/A Channel 0
4. Write 0xFFF (Hex) Data to D/A Channel 0
5. Trim VR1-2 until the DVM reading 4.9988 V

B. Bipolar (±5 V)

1. Set D/A channel : (1) Bipolar mode. (2) Reference Voltage : -5 V
2. Connect DVM to D/A Channel 0
3. Write 0x800 (Hex) Data to D/A Channel 0
4. Trim VR1-1 untill the DVM reading 0.0000 V
5. Write 0xFFF (Hex) to D/A Channel 0
6. Trim VR1-2 until the DVM reading 4.9988 V

C. Current loop 4 ~ 20 mA

1. Set D/A Channel : (1) Unipolar mode . (2) Reference Voltage : -5 V
2. Ref. Sec. 2.5 signal connection connect DAM to current loop channel
3. Write 0x000 (Hex) to D/A Channel 0
4. Trim VR1-3 until the DAM reading 4.0000 mA
5. Write 0xFFF (Hex) to D/A Channel 0
   Trim VR1-2 until the DAM reading 20 mA

Appendix: Daughter Board

A1. DB-16P Isolated Input Board

The DB-16P is a 16 Channel isolated digital input daughter board. The optically isolated inputs of the DB-16P consist of a bi-directional optocoupler with a resistor for current sensing. You can use the DB-16P to sense DC signal from TTL levels up to 24 V. Or use the DB-16P to sense a wide range of AC signals. You can use the board to isolate the computer from large common-mode voltages, ground loops and voltage spikes that often occur in industrial environments.

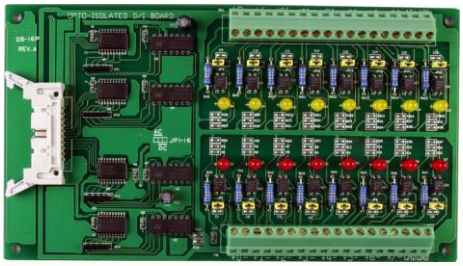

DB-16P

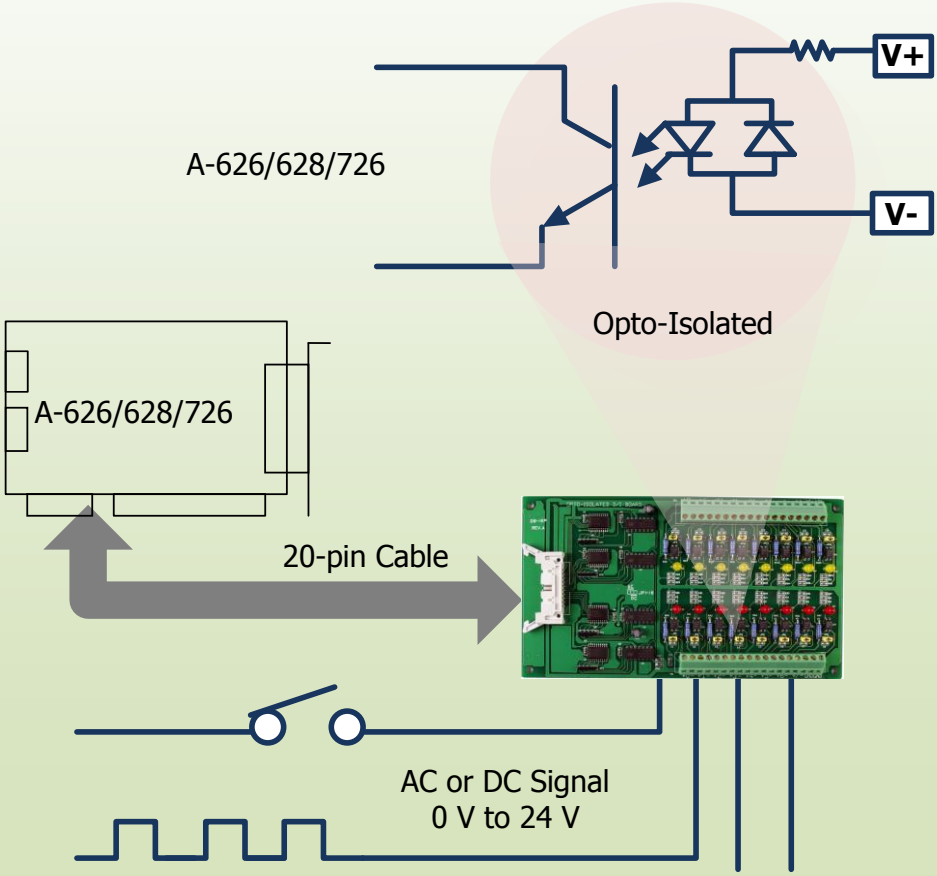

A2. DB-16R Relay Board

The DB-16R 16 channel relay output board consists of 16 Form C relays for efficient switch of load by programmed control. It is connector and functionally compatible with 785 series board but with industrial type terminal block. The relay are energized by apply 5 voltage signal to the appropriated relay channel on the 20-pin flat connector 16 enunciator LED's, One for each relay, light when their associated relay is activated . To avoid overloading your PC's power supply, this board provides a screw terminal for power supply.

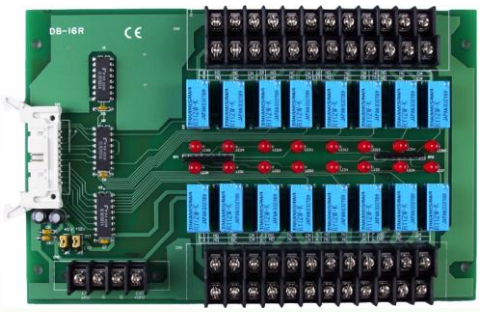

DB-16R

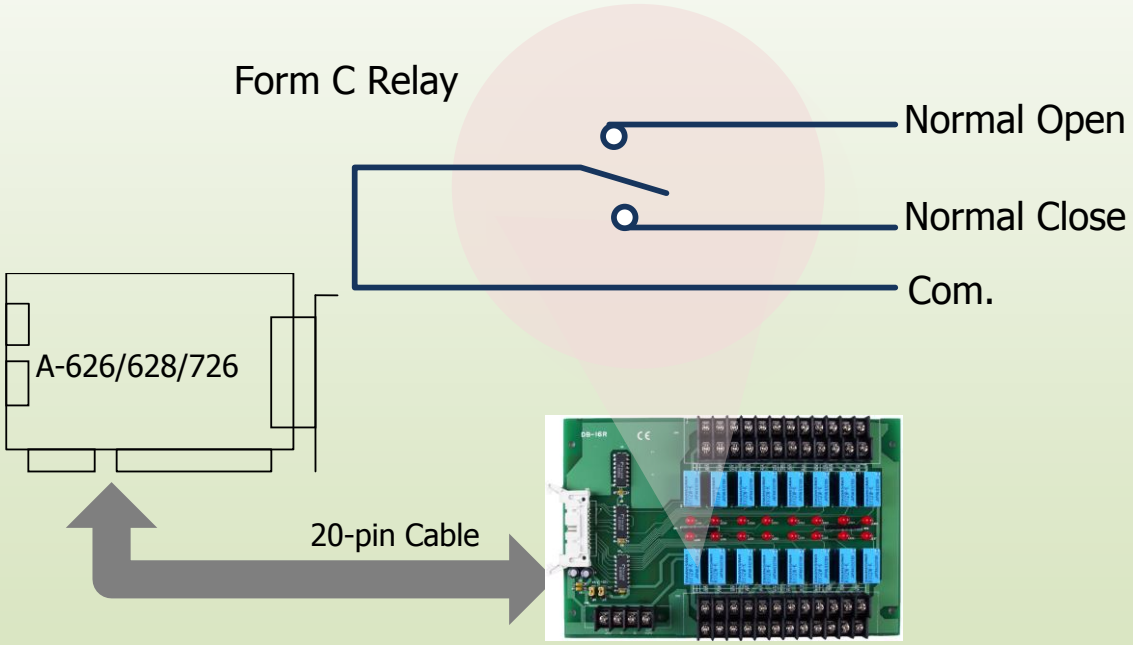

Note!!

Channel: 24 Form C Relay

Relay: Switching up to 0.5 A at 110 V_{AC}
or 1 A at 24 V_{DC}

A4. DB-24PR Power Relay Board

The DB-24PR 24-Channel Power relay output board consists of 8 Form C and 16 form A electromechanical relay s for efficient switching of load programmed control. The contact of each relay can control a 5 A load at 250 V_{AC}/30 V_{DC}. The relay is energized by applying a 5 voltage signal to the appropriate relay channel on the 20-pin flat cable connector (Just used 16 relays) or 50-pin flat cable connector.(OPTO-22 compatible , for DIO-24 series) . Twenty - four enunciator LEDs, one for each relay, light when their associated relay is activated. To avoid overloading your PC's power supply, this board needs a +12 V_{DC} or +24 V_{DC} external power supply.

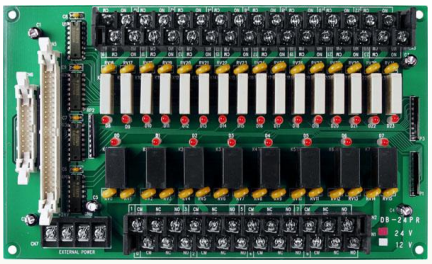

DB-24PR

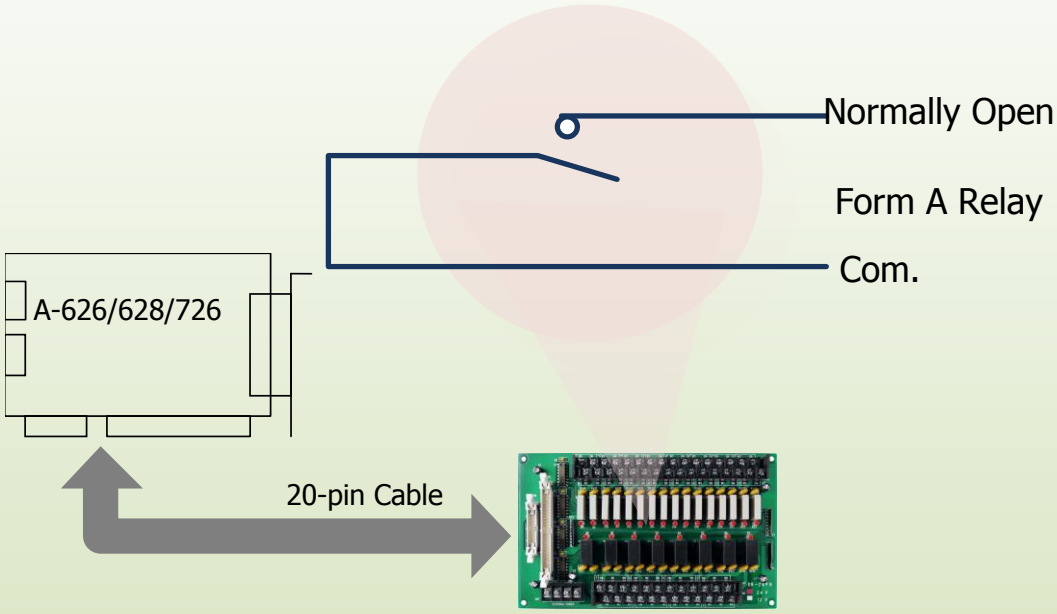

50-pin connector (OPTO-22) for DIO-24, DIO-48 and DIO-144
20-pin connector for 16 channel digital output, A-82x, A-62x, A-726, DIO-64
Channel: 16 Form A Relay, 8 Form C Relay
Relay: Switching up to 5 A at 110 V_{AC} or 1 A at 24 V_{DC}

A5. DB-8125 Screw Terminal Board

The DB-8125 is low cost universal screw terminal board for 37-pin D-type connector or two 20-pin connector.

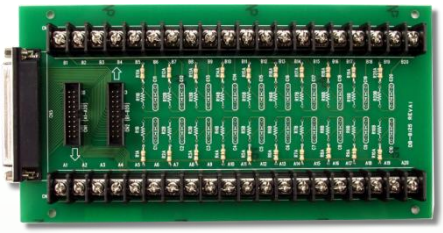

DB-8125

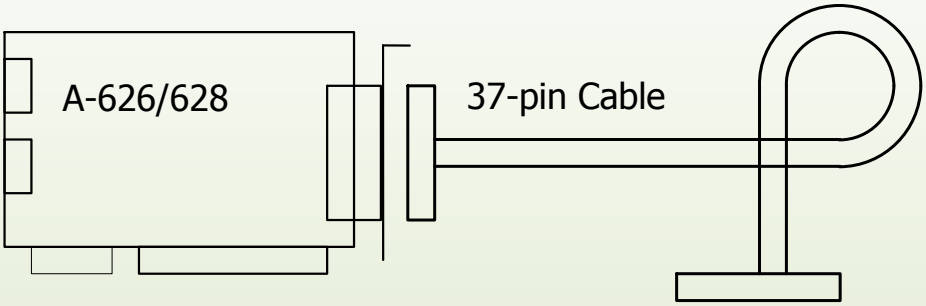

Industrial type terminal blocks permit heavy-duty and reliable connection of signals.

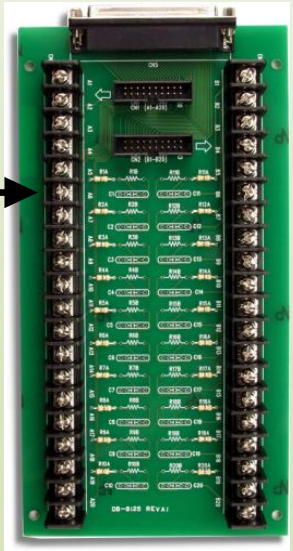

A6. DN-37

Termination accessory with 37 screw terminals for easy connection of field I/O signals to 37-pin boards. It includes one 37-pin D-sub connector for direct connection to 37-pin cables with hardware for mounting on a standard DIN rail.

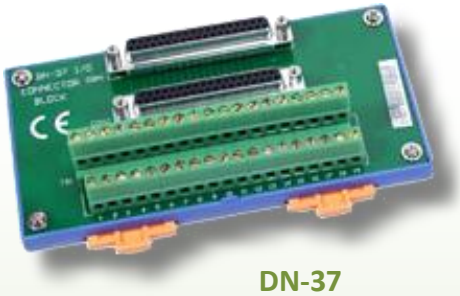

DN-37

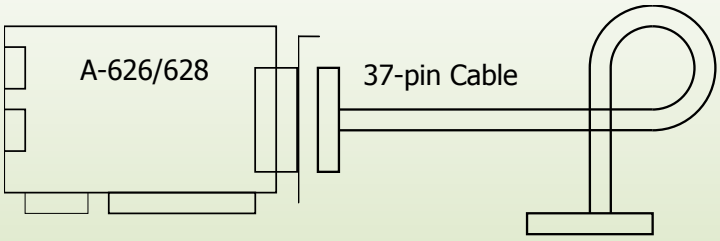

A7. DN-20

Termination accessory with 20 screw terminals for easy connection of field I/O signals to 20-pin boards. It includes one 20-pin header connector for direct connection to 20-pin cables with hardware for mounting on a standard DIN rail.

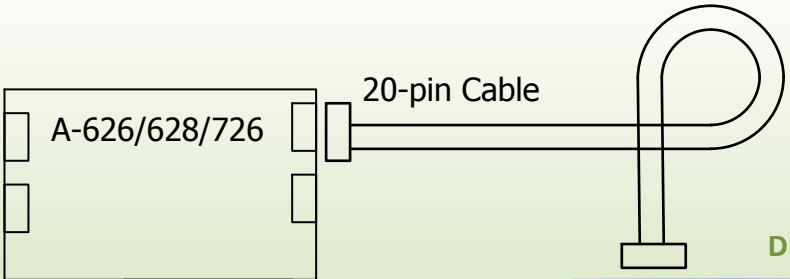

DN-20