Heavy Industrial Monitor

6.5”~15.6” DM-F IP65 Industrial Monitor

Features

- Robust IP65 aluminum front bezel
- Aesthetic ultra-thin bezel for seamless panel mount installation
- DC input
- DVI / VGA flexible video input solution
- Resistive single touch
- Wide temperature support

IP65 | High Brightness | -20°C~60°C | MOUNT

Specifications

Preliminary

Model		DM-F65A	DM-F08A	DM-F12A	DM-F15A	DM-FW15A
LCD	LCD Display	6.5” (4:3)	8” (4:3)	12.1" (4:3)	15" (4:3)	15.6” (16:9)
	Max. Resolution	640 (W) x 480 (H)	800 x 600	1024 (W) x 768 (H)	1024 (W) x 768 (H)	1366 (W) x768 (H)
	Brightness (cd/m²)	800	500	600	450	400
	Contrast Ratio	600:1	500:1	700 : 1	800 : 1	500:1
	LCD Color	16.2M	262K	16.2M	16.2M	16.2M
	Pixel Pitch (mm)	0.207 x 0.207	0.0675 x 0.2025	0.24 x 0.24	0.29 x 0.29	0.252 x 0.252
	Viewing Angle (H-V)	160° / 140°	140°/120°	160° /140°	160° / 150°	170° / 160°
	Backlight MTBF (Hrs)	50000	50000	50000	70000	50000
Touchscreen & Controller		5-wire resistive single touch window/ Penmount 6000		5-wire resistive single touch window/ Penmount 6000 (Anti-glare Surface) 10-point Projected capacitive touch window, 6H/EETI EXC3188 (Anti-UV, Anti-glare Surface)		
I/O Ports		1 x VGA (DB-15) 1 x DVI 1 x USB 2.0 (touch) 1 x RS-232 (reserved for resistive touch ATO) 1 x Lockable 12V DC jack		1 x VGA (DB-15) 1 x HDMI 1 x DisplayPort 1.1 1 x USB 2.0 (touch) 1 x RS-232 (reserved for resistive touch ATO) 1 x Lockable 9V-36V DC jack 1 x 9V-36V terminal block		
OSD	OSD Button	5-key membrane OSD keypad		7-key membrane OSD keypad		
	Smart OSD Software	Smart OSD Software				
Physical	Construction Material	Aluminum front frame and sheet metal rear cover				
	Mounting	Panel Mount/ Rack Mount 75 x 75 VESA Mount		Panel Mount/ Rack Mount 100 x 100 VESA Mount		
	Enclosure Color	Black C				
	Dimensions (mm)	191.8 x 154.36 x 42.88	222.2 x 182.2 x 42.7	262.2 x 322.2 x 40.5	303 x 378.5 x 43.2	400.1 x 253.3 x 52.9
	Cutout Dimensions (mm)	180 x 140	206 x 154	244.8 x 304.8	285.6 x 361.1	379.1 x 232.3
	Weight (kg) Net/ Gross	1.1 / 2.6	1.33 / 4.5	2.7 / 4.9	3.5 / 5.5	4 / 6.5
Environment	Operating Temperature (with air flow)	-20°C ~ 60°C (with air flow)				
	Storage Temperature	-20°C ~ 70°C				
	Humidity	10% to 95% (non-condensing)				
	IP Level	IP 65 compliant front panel				
	Safety and EMC	CE & FCC certified				
Power Input		12V DC		9V~36V DC		
Power consumption		12V @ 0.5A	12V @ 0.5A	9V @ 2.2A 36V @ 0.5A	9V @ 1.6A 36V @ 0.4A	9V @ 1.3 36V @ 0.33

Heavy Industrial Monitor

17”~23.8” DM-F IP65 Industrial Monitor

Features

- Robust IP65 aluminum front bezel
- Aesthetic ultra-thin bezel for seamless panel mount installation
- Wide range 9V~36V DC input
- HDMI / DisplayPort / VGA flexible video input solution
- Projected capacitive multi-touch and resistive single touch options
- Wide temperature support

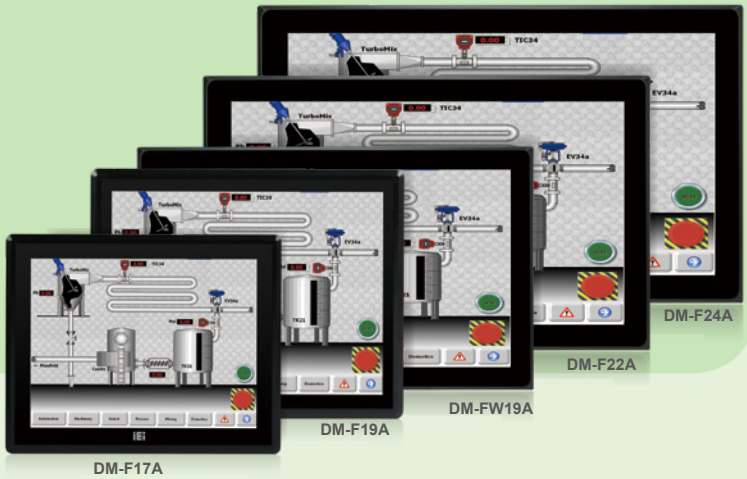

Specifications

Preliminary

Model		DM-F17A	DM-FW19A	DM-F19A	DM-F22A	DM-F24A
LCD	LCD Display	17" (5:4)	18.5" (16:9)	19" (5:4)	21.5" (16:9)	23.8" (16:9)
	Max. Resolution	1280 (W) x 1024 (H)	1366 (W) x 768 (H)	1280 (W) x 1024 (H)	1920 (W) x 1080 (H)	1920 (W) x 1080 (H)
	Brightness (cd/m²)	350	400	350	250	250
	Contrast Ratio	1000 : 1	1000 : 1	1000 : 1	1000 : 1	3000 : 1
	LCD Color	16.7M				
	Pixel Pitch (mm)	0.26 x 0.26	0.3 x 0.3	0.294 x 0.294	0.25 x 0.25	0.28 x 0.28
	Viewing Angle (H-V)	170° / 160°			170° / 160°	178° / 178°
	Backlight MTBF (Hrs)	50000			30000	30000
Touchscreen & Controller		5-wire resistive single touch window, 3H/Penmount 6000 (Anti-glare Surface) 10-point Projected capacitive touch window, 6H/EETI EXC3188 (Anti-UV, Anti-glare Surface)			10-point Projected capacitive touch window, 6H/EETI EXC3188 (Anti-UV, Anti-glare Surface)	
I/O Ports		1 x VGA (DB-15) 1 x DVI (F19A only) 1 x HDMI (F17A & FW19A only) 1 x DisplayPort 1.1 1 x USB 2.0 (touch) 1 x RS-232 (reserved for resistive touch ATO) 1 x Lockable 9V-36V DC jack 1 x 9V-36V terminal block			1 x VGA (DB-15) 1 x HDMI 1 x DisplayPort 1.1 1 x USB 2.0 (touch) 1 x RS-232 (reserved for resistive touch ATO) 1 x Lockable 9V-36V DC jack 1 x 9V-36V terminal block	
OSD	OSD Button	7-key membrane OSD keypad				
	Smart OSD Software	Smart OSD Software				
Physical	Construction Material	Aluminum front frame and sheet metal rear cover				
	Mounting	Panel Mount/ Rack Mount 100 x 100 VESA Mount			Panel Mount 100 x 100 VESA Mount	Panel Mount 100 x 100 VESA Mount
	Enclosure Color	Black C				
	Dimensions (mm)	341.4 x 408.4 x 49.3	468.8 x 288.2 x 48.9	372.4 x 447.4 x 49.57	358.4 x 550.4 x 49.1	382 x 600 x 49.4
	Cutout Dimensions (mm)	324 x 391	447.8 x 267.2	430 x 355	340 x 532	358.6 x 576.6
	Weight (kg) Net/Gross	4.4 / 7.1	5 / 8.1	5.4 /8.4	6.3 / 9.6	7.6 / 10.9
Environment	Operating Temperature (with air flow)	-20°C ~ 60°C (with air flow)			-10°C ~ 50°C	-10°C ~ 50°C
	Storage Temperature	-20°C ~ 70°C	-20°C ~ 70°C	-20°C ~ 70°C	-20°C ~ 60°C	-20°C ~ 60°C
	Humidity	10% to 95% (non-condensing)				
	IP Level	IP 65 compliant front panel				
	Safety and EMC	CE & FCC certified				
Power input		9V~36V DC				
Power consumption		9V @ 2.6A 36V @ 0.6A	9V @ 1.33A 36V @ 0.35A	9V @ 3.3A 36V @ 0.8A	9V @ 2.5A 36V @ 0.6A	9V @ 3.4A 36V @ 0.8A

Ordering Information

Part No.	Description
DM-F65A/R-R10	6.5” 800 cd/m² high-luminance VGA LCD monitor with aluminum die casting front panel, black color, USB resistive touchscreen, R10
DM-F08A/R-R10	8” 500 cd/m² SVGA LCD monitor, Aluminum front panel, Black color, W/ USB resistive touch screen, 12V DC input, R10
DM-F12A/R-R20	12.1” 600 cd/m² XGA LCD monitor, Aluminum die casting front panel, Black color, W/ USB resistive touch screen, 9 ~36V DC input, R20
DM-F12A/PC-R20	12.1” 600 cd/m² XGA LCD monitor, Aluminum die casting front panel, Black color, W/ USB projected capacitive touch screen, 9 ~36V DC input, R20
DM-F15A/R-R30	15” 450 cd/m² XGA LCD monitor, Aluminum die casting front panel, Black color, W/ USB resistive touch screen, 9 ~36V DC input, R30
DM-F15A/PC-R30	15” 450 cd/m² XGA LCD monitor, Aluminum die casting front panel, Black color, W/ USB projected capacitive touch screen, 9 ~36V DC input, R30
DM-FW15A/PC-R10	15.6” 400 cd/m² 1366x768 LCD monitor, Aluminum front panel, Black color, W/ USB PCAP touch screen, 9 ~36V DC input, R10
DM-F17A/R-R20	17” 350 cd/m² SXGA LCD monitor, Aluminum die casting front panel, Black color, W/ USB resistive touch screen, 9 ~36V DC input, R20
DM-F17A/PC-R20	17” 350 cd/m² SXGA LCD monitor, Aluminum die casting front panel, Black color, W/ USB projected capacitive touch screen, 9 ~36V DC input, R20
DM-FW19A/PC-R10	18.5” 400 cd/m² 1366x768 LCD monitor, Aluminum front panel, Black color, W/ USB PCAP touch screen, 9 ~36V DC input, R10
DM-F19A/R-R20	19” 350 cd/m² SXGA LCD monitor, Aluminum die casting front panel, Black color, W/ USB resistive touch screen, 9 ~36V DC input, R20
DM-F19A/PC-R20	19” 350 cd/m² SXGA LCD monitor, Aluminum die casting front panel, Black color, W/ USB projected capacitive touch screen, 9 ~36V DC input, R20
DM-F22A/PC-R20	21.5” 250 cd/m² FHD LCD monitor, Aluminum die casting front panel, Black color, W/ USB projected capacitive touch screen, 9 ~36V DC input, R20
DM-F24A/PC-R30	23.8” 250 cd/m² FHD LCD monitor, Aluminum front panel, Black color, W/ USB projected capacitive touch screen, 9 ~36V DC input, R30

Options

Item	DM-F65A	DM-F08A	DM-F12A	DM-F15A	DM-FW15A	DM-F17A	DM-F19A	DM-FW19A	DM-F22A	DM-F24A
Arm	ARM-11-RS		ARM-11-RS	ARM-31-RS	ARM-31-RS	ARM-31-RS	ARM-31-RS	ARM-31-RS	ARM-31-RS	ARM-31-RS
Stand	STAND-B08		STAND-A12-RS STAND-C12-R10	STAND-A19-RS STAND-C19-R10 STAND-A21-R10						
Wall Mount Kit	AFLWK-12		WK-190MS-R10							
Panel Mount Kit	FPK-07-R10		FPK-01-R10				FPK-02-R10		FPK-02-R10	FPK-03-R10
Rack Mount Kit	FRK65-R10	FRK08-R10	FRK12-R10	FRK15-R10	FRK-W15-R10	FRK17-R10	FRK19D-R10	FRK-W19-R10	N/A	
Cable Cover	N/A		N/A	DM-F-CC01-R10		DM-F-CC01-R10	DM-F-CC02-R10		DM-F-CC02-R10	
RS-232 Touch Cable Kit	DM-F-COMKIT-R10						DM-F-COMKIT01-R10		N/A	
HDMI Cable	N/A		32012-000800-101-RS				N/A		32012-000800-101-RS	
DisplayPort Cable	N/A		32004-000200-100-RS							
DVI Cable	32000-086600-RS		N/A				32000-086600-RS		N/A	
Power Adapter	N/A		63040-010060-120-RS							

Packing List

Item	P/N	Q'ty	Remark
Touch Pen	43125-0002C0-00-RS (DM-F65A/F08A/F12A/F15A/F17A/F19A only)	1	Resistive touch only
USB Cable	32001-006100-100-RS	1	For touchscreen
VGA Cable	32000-036200-RS	1	
Power Adapter	63040-010036-121-RS (for DM-F65/08A)		

DM-F65A/08A
Fully Integrated I/O

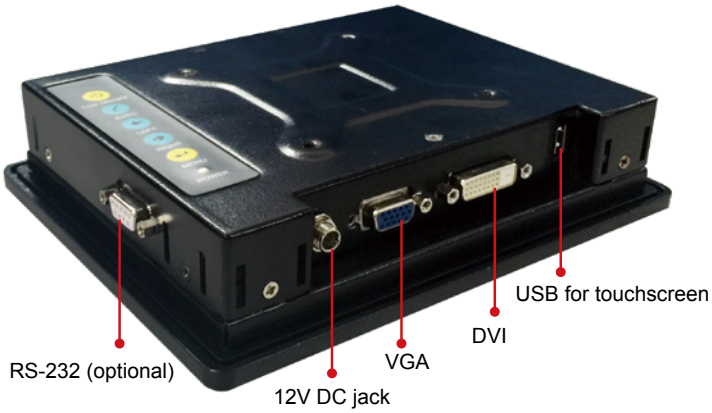

DM-F12A/F15A/FW15A/F17A
Fully Integrated I/O

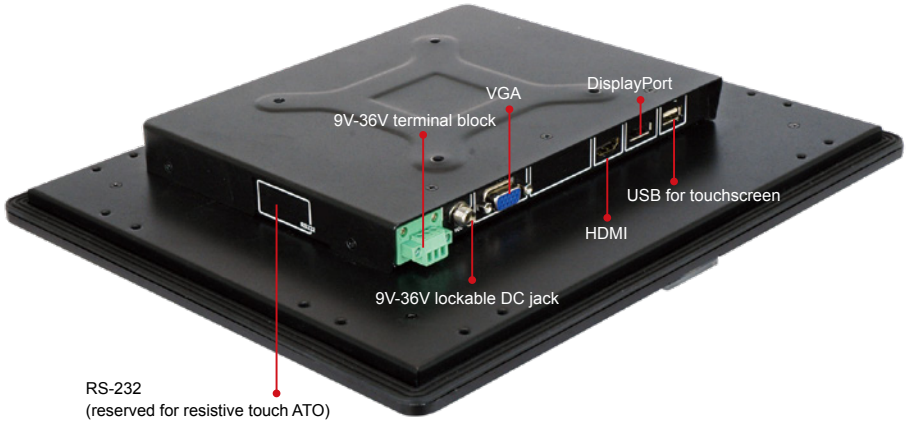

DM-F19A
Fully Integrated I/O

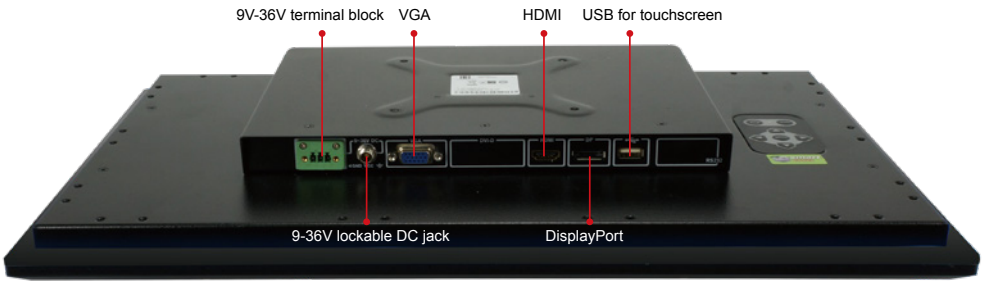

DM-F22A/F24A
Fully Integrated I/O

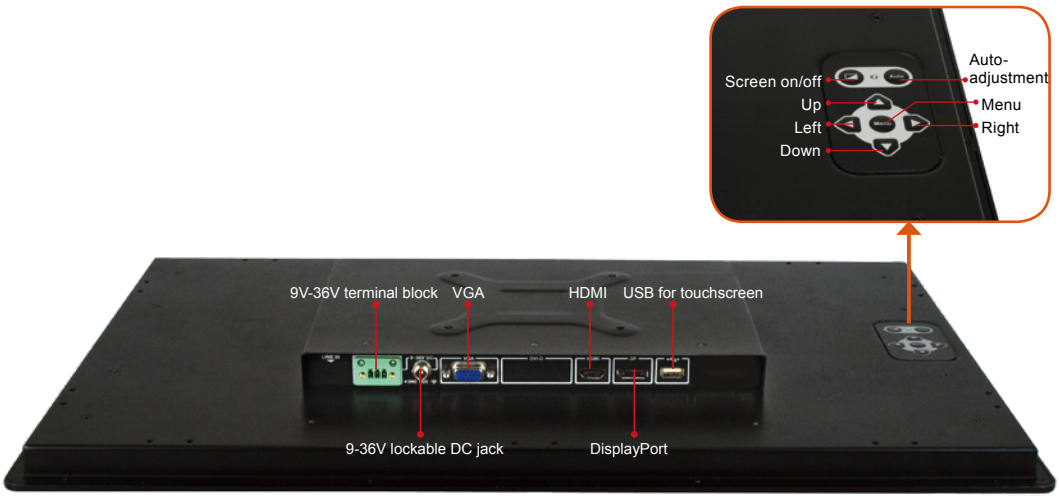

DM-F65A Dimensions

(Unit: mm)

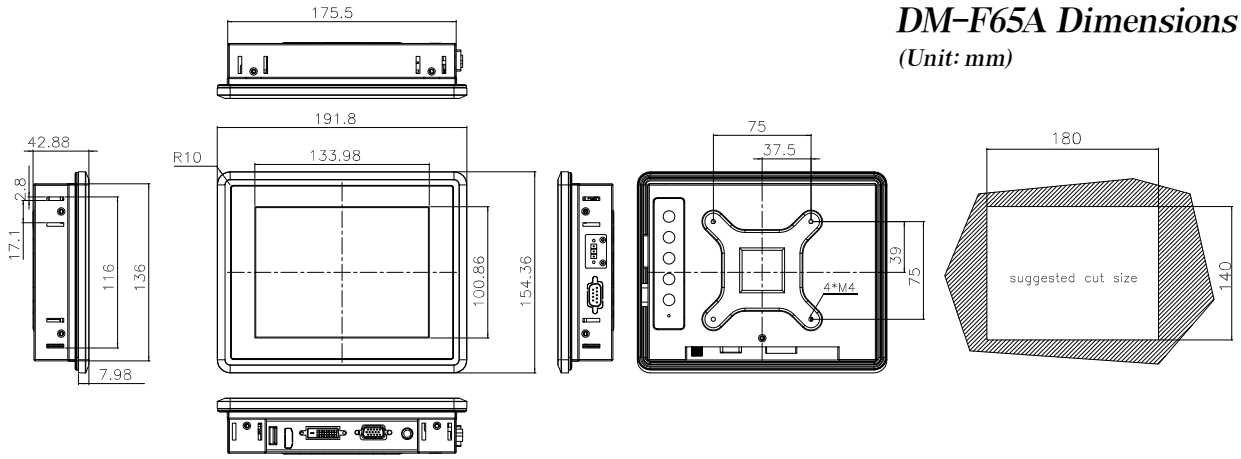

DM-F08A Dimensions

(Unit: mm)

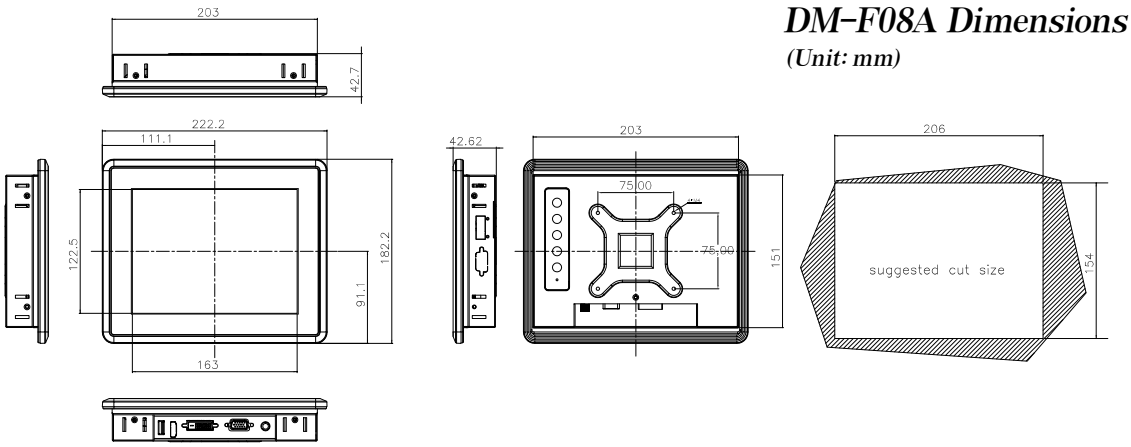

DM-F12A Dimensions

(Unit: mm)

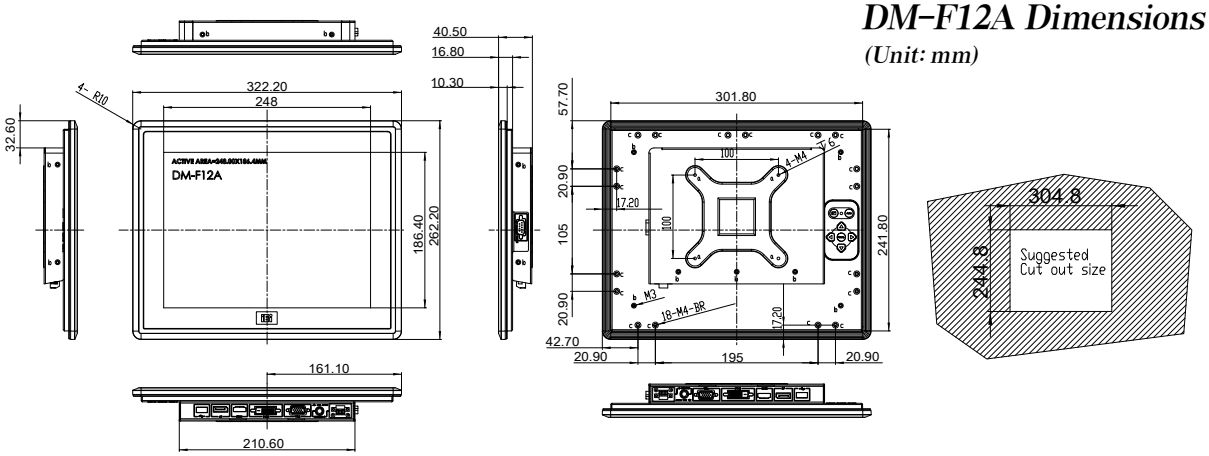

DM-F15A Dimensions

(Unit: mm)

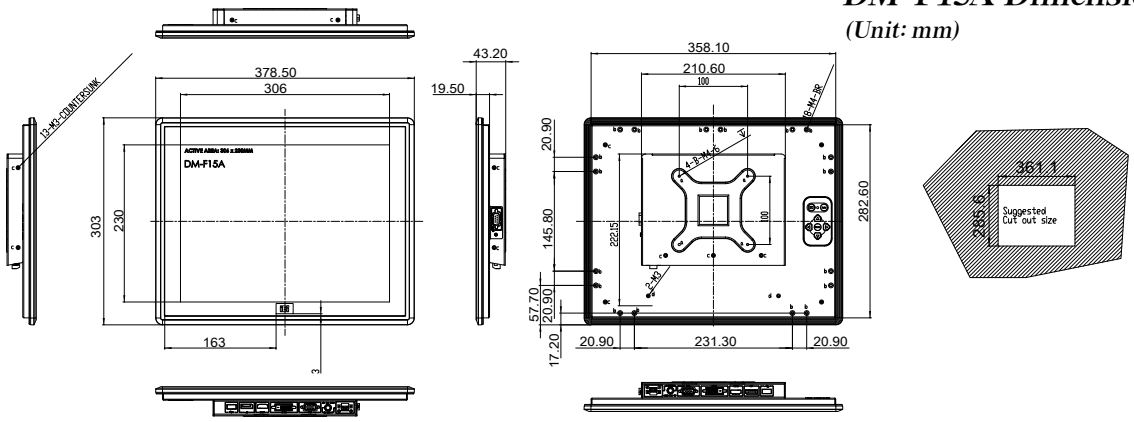

DM-FW15A Dimensions

(Unit: mm)

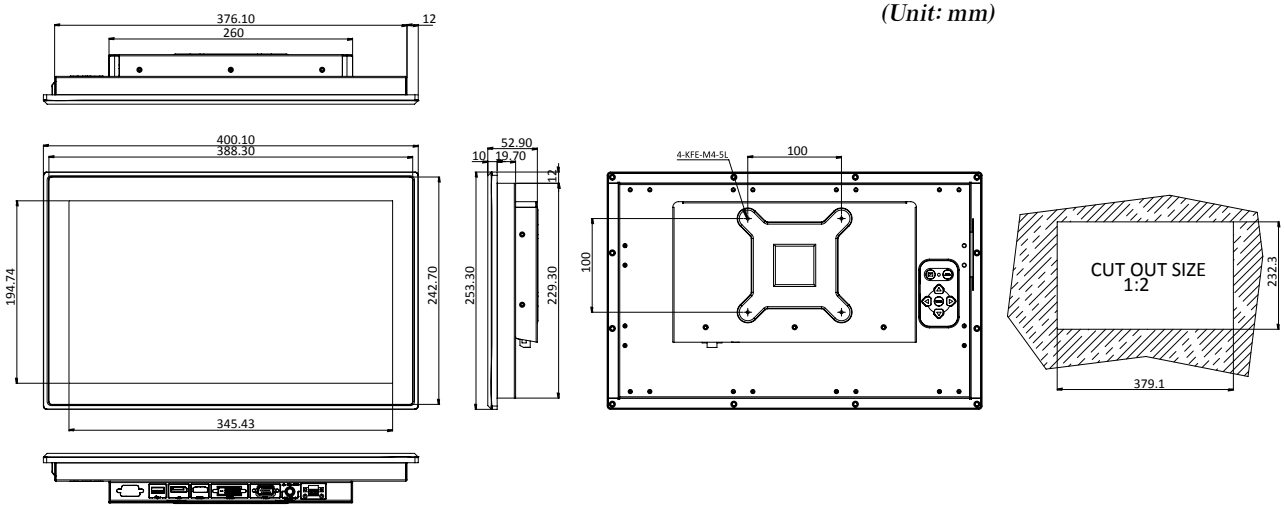

DM-F17A Dimensions

(Unit: mm)

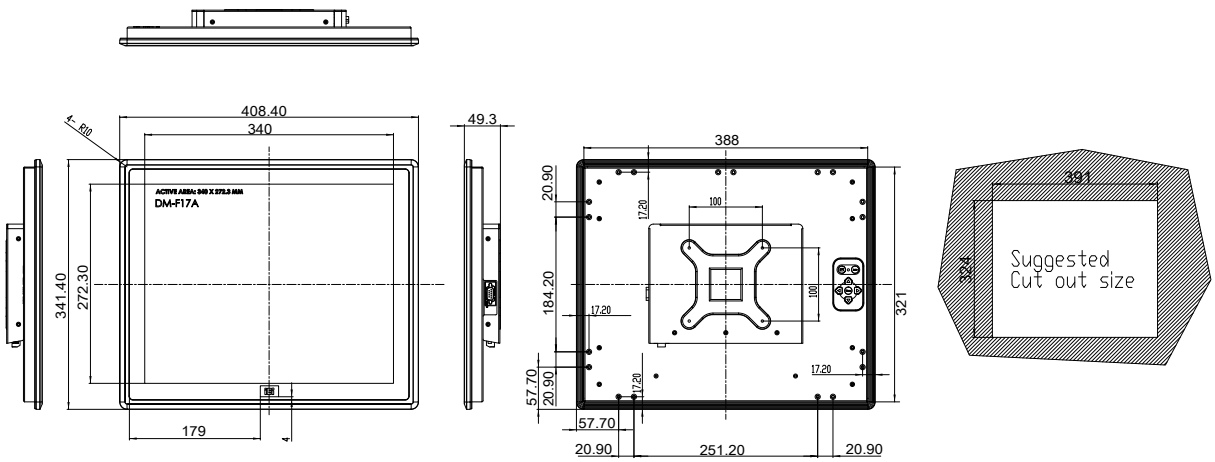

DM-F19A Dimensions

(Unit: mm)

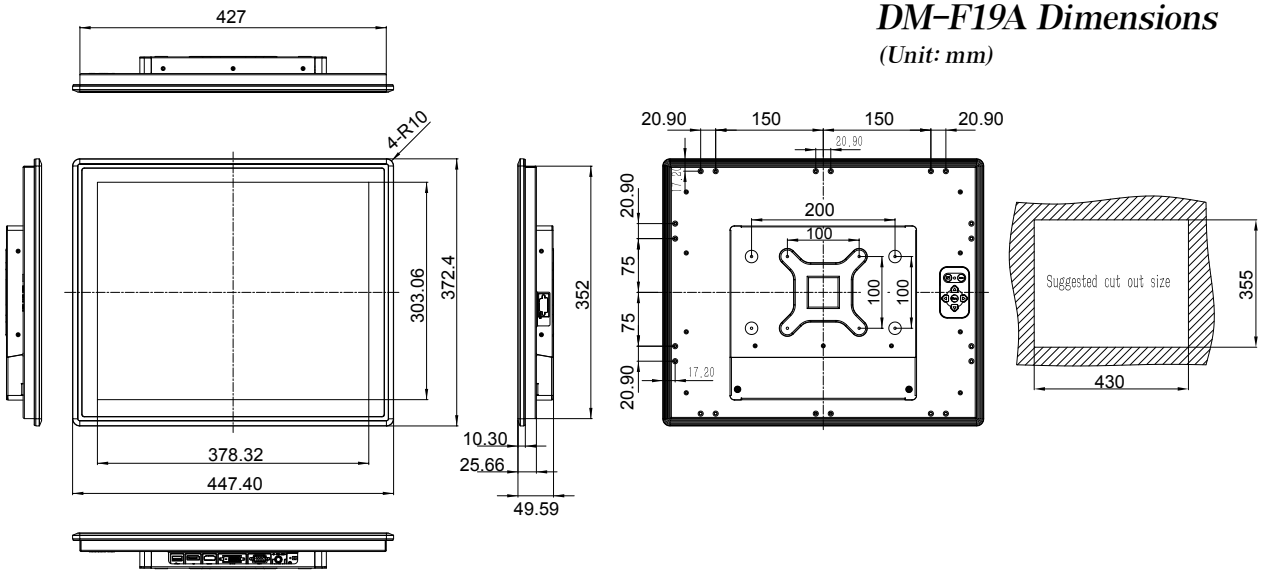

DM-FW19A Dimensions

(Unit: mm)

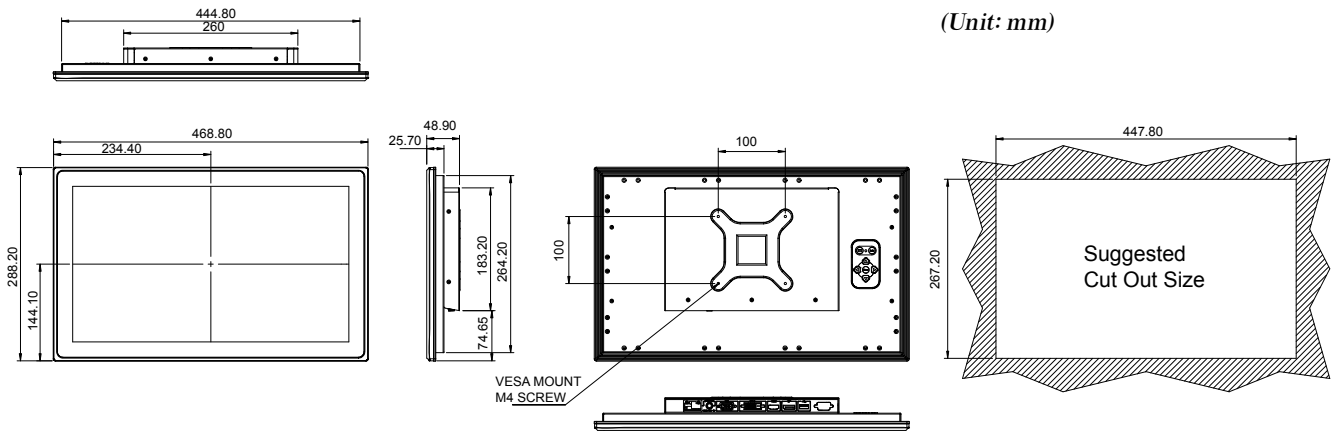

DM-F22A Dimensions

(Unit: mm)

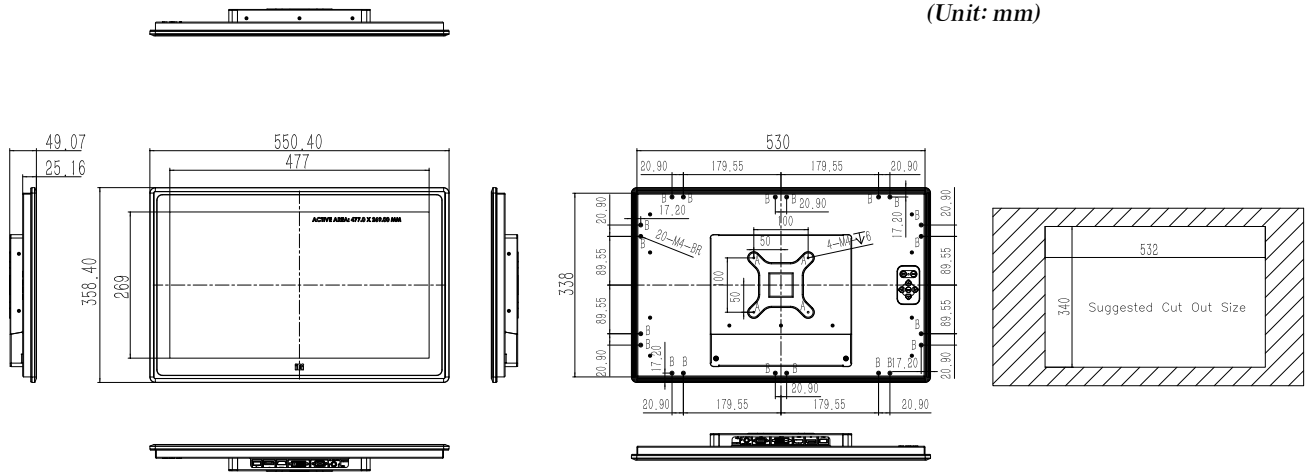

DM-F24A Dimensions
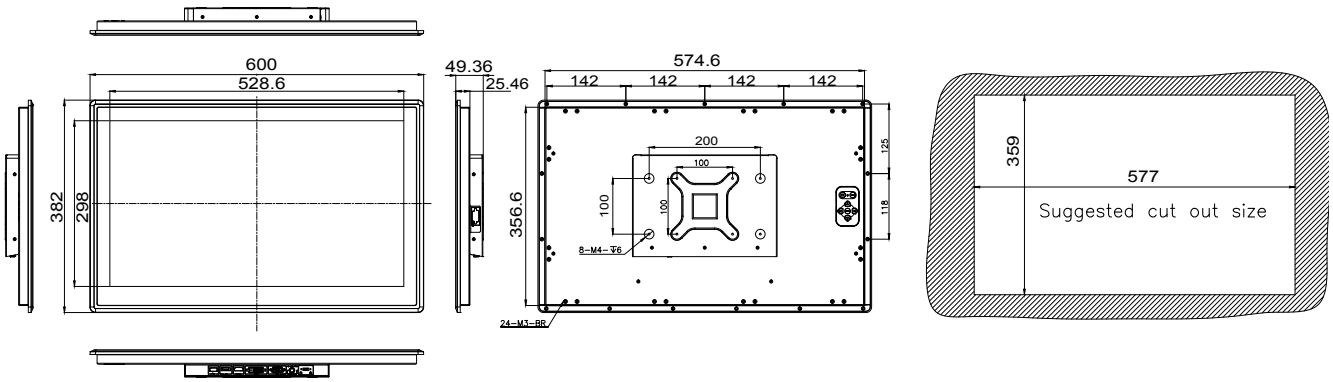
(Unit: mm)