IEI Integration Corp.

MODEL:

uIBX-250-BW

Fanless Embedded System with Intel® Celeron® N3160,
VGA, HDMI, GbE, Two RS-232/422/485,
Four USB 3.0 and RoHS Compliant

User Manual

Rev. 1.03 – 8 February 2018

RoHS Lead Free

Revision

Date	Version	Changes
8 February 2018	1.03	Update Section 3.8: Powering On/Off the System Add Section 3.9.2: Mounting the System with DIN Rail Mounting Kit
1 April 2017	1.02	Update Table 3- 1: RJ-45 RS-232/422/485 Serial Port Pinouts Update Table 3- 2: DB-9 RS-232/422/485 Connector Pinouts
14 October 2016	1.01	Add Table 3- 1: RJ-45 RS-232/422/485 Serial Port Pinouts Add Table 3- 2: DB-9 RS-232/422/485 Connector Pinouts
2 June 2016	1.00	Initial release

Copyright

COPYRIGHT NOTICE

TRADEMARKS

Manual Conventions

WARNING

Warnings appear where overlooked details may cause damage to the equipment or result in personal injury. Warnings should be taken seriously.

CAUTION

Cautionary messages should be heeded to help reduce the chance of losing data or damaging the product.

NOTE

These messages inform the reader of essential but non-critical information. These messages should be read carefully as any directions or instructions contained therein can help avoid making mistakes.

HOT SURFACE

This symbol indicates a hot surface that should not be touched without taking care.

Table of Contents

List of Figures

List of Tables

BIOS Menus

Chapter

1

Introduction

1.1 Overview

Figure 1-1: uIBX-250-BW

The uIBX-250-BW embedded system is a fanless system with one VGA port and one HDMI for dual display. It accepts an Intel® Celeron® N3160 processor and supports one 204-pin DDR3L 1.35 V SO-DIMM module up to 8 GB (pre-installed 2 GB). The uIBX-250-BW supports a 2.5" SATA HDD with up to 6 Gb/s data transfer rate. Two RS-232/422/485 serial ports and four USB 3.0 ports ensure simplified connectivity to a variety of external peripheral devices.

1.2 Features

The uIBX-250-BW features are listed below:

- Fanless system with Intel® Celeron® N3160 processor
- Dual display
- Two RS-232/422/485
- Full-size PCIe Mini slot for expansion
- Four USB 3.0 ports
- Two GbE LAN ports

1.3 Technical Specifications

The uIBX-250-BW technical specifications are listed in **Table 1-1**.

Chassis	
Color	Black
Dimensions (WxDxH)	136.6 x 102.4 x 52 (mm)
System Fan	Fanless
Chassis Construction	Extruded aluminum alloy
Motherboard	
CPU	Intel® Celeron® N3160 (up to 2.24 GHz, quad-core, 2 MB cache, TDP=6W)
Chipset	SoC
System Memory	1 x 204-pin DDR3L 1.35 V SO-DIMM (system max: 8 GB) Pre-installed 2 GB
Storage	
Hard Drive	1 x 2.5" SATA 6Gb/s HDD/SSD bay
I/O Interfaces	
USB 3.0	4 x USB 3.0 ports
Ethernet	2 x RJ-45 PCIe GbE by Intel® I211 controller
RS-232/422/485	2 x RJ-45 RS-232/422/485
Button	1 x Power button, 1 x AT/ATX switch
Display	1 x HDMI, 1 x VGA
Resolution	HDMI: 3840 x 2160@30MHz VGA: 1920 x1200@60Hz
Audio	1 x Line-out, 1 x Mic-in
Other	HDD LED
Power	
Power Input	DC Jack: 12 V DC

Power Consumption	12V @ 2A (Intel® Celeron® N3160 with 2 GB memory)
Reliability	
Mounting	Wall mount, VESA 75
Operating Temperature	-20°C ~60°C with air flow (SSD), 10% ~ 95%, non-condensing
Operating Shock	Half-sine wave shock 5G, 11ms, 3 shocks per axis
Operating Vibration	MIL-STD-810F 514.5 C-1 (HDD), MIL-STD-810F 514.5 C-2 (SSD)
Weight (Net/Gross)	470 g/1.4 kg
Safety/EMC	CE/FCC
OS	
Supported OS	Microsoft® Windows 8, Microsoft® Embedded Standard 7 E

Table 1-1: Technical Specifications

1.4 Front Panel

The front panel of the uIBX-250-BW has the following features (**Figure 1-2**):

- 1 x HDD LED
- 1 x Mic in
- 1 x Line out
- 1 x Power button
- 1 x VGA connector
- 2 x USB 3.0 connectors

Figure 1-2: uIBX-250-BW Front Panel

1.5 Rear Panel

The rear panel of the uIBX-250-BW has the following features (**Figure 1-3**):

- 1 x 12 V DC IN
- 1 x AT/ATX Switch
- 2 x USB 3.0 connector
- 2 x RJ-45 LAN connectors
- 2 x RS-232/422/485 serial port connectors
- 1 x Reset button
- 1 x HDMI connector

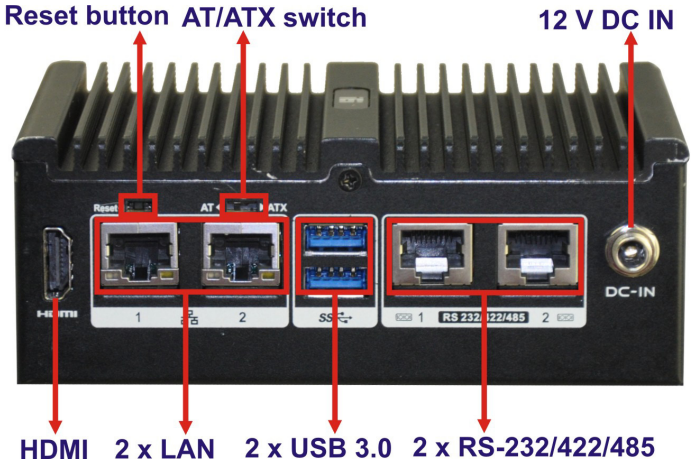

Figure 1-3: uIBX-250-BW Rear Panel

1.6 Dimensions

The physical dimensions are shown below:

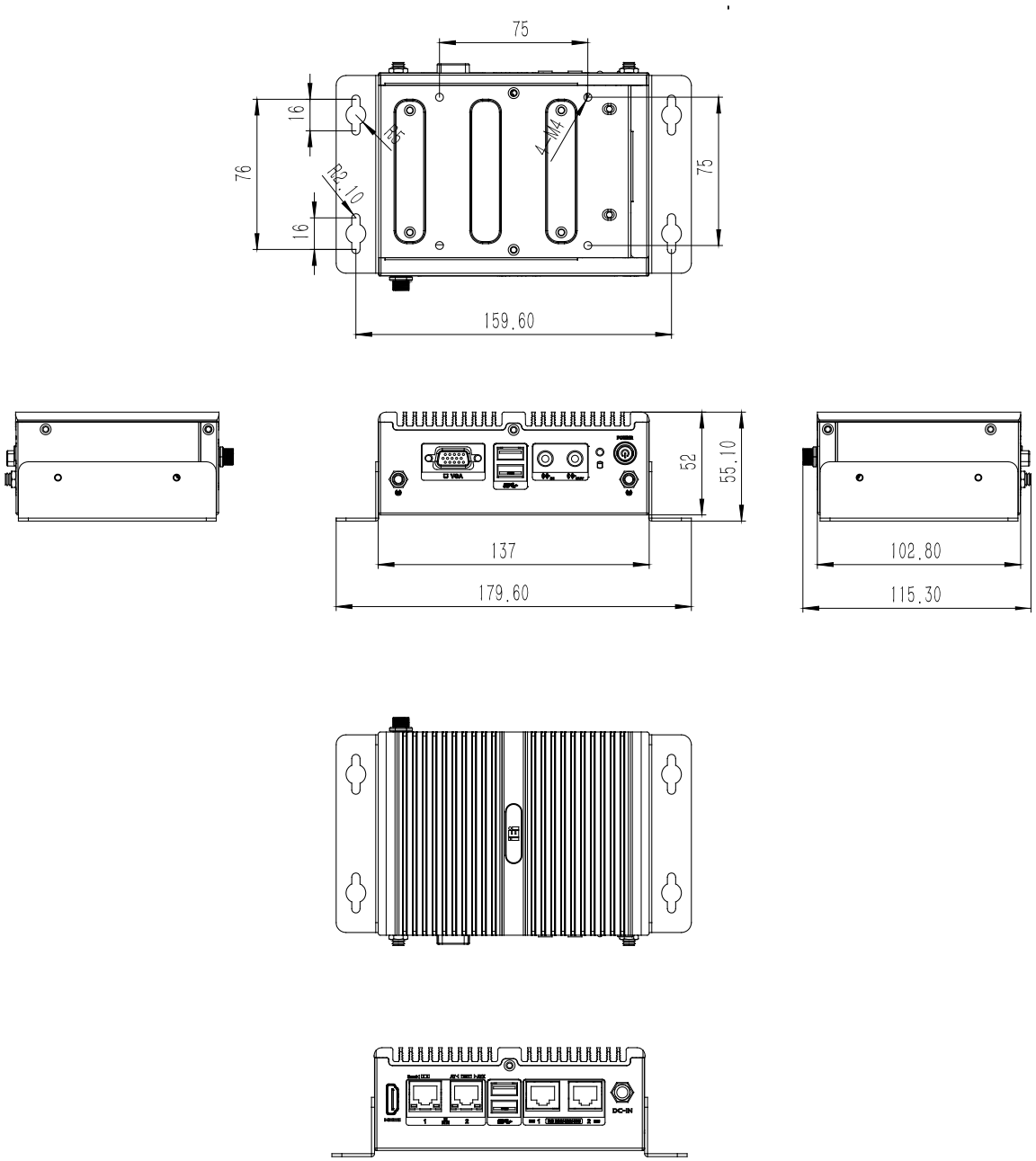

Figure 1-4: Physical Dimensions (mm)

Chapter

2

Unpacking

2.1 Unpacking

To unpack the embedded system, follow the steps below:

Step 1: Use box cutters, a knife or a sharp pair of scissors that seals the top side of the external (second) box.

Step 2: Open the external (second) box.

Step 3: Use box cutters, a knife or a sharp pair of scissors that seals the top side of the internal (first) box.

Step 4: Lift the system out of the boxes.

Step 5: Remove both polystyrene ends, one from each side.

Step 6: Make sure all the components listed in the packing list are present.

2.2 Packing List

NOTE:

If some of the components listed in the checklist below are missing, please do not proceed with the installation. Contact the IEI reseller or vendor you purchased the uIBX-250-BW from or contact an IEI sales representative directly. To contact an IEI sales representative, please send an email to sales@iei.com.tw.

The uIBX-250-BW is shipped with the following components:

Quantity	Item and Part Number	Image
1	uIBX-250-BW	

Quantity	Item and Part Number	Image
1	Power Adapter	
1	Power Cord	
2	Mounting Bracket	
1	Utility CD	
1	One Key Recovery CD	

Table 2-1: Package List Contents

2.3 Optional Items

The following are optional component(s) which may be separately purchased:

EMB-WIFI-KIT01-R20 (1T1R Wi-Fi module kit for embedded system , IEEE802.11a/b/g/n/ac, 1 x Wi-Fi module, 2 x RF cable, 2 x Antenna, RoHs)	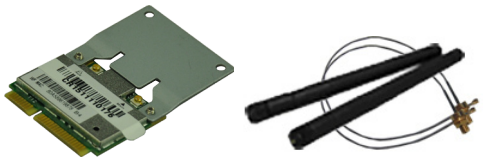
DK-75-R10 (VESA 75 to DIN-RAIL mounting kit)	

Table 2-2: Optional Items

Chapter

3

Installation

3.1 Anti-static Precautions

WARNING:

Failure to take ESD precautions during the maintenance of the uIBX-250-BW may result in permanent damage to the uIBX-250-BW and severe injury to the user.

Electrostatic discharge (ESD) can cause serious damage to electronic components, including the WAFER series motherboard and the power module. (Dry climates are especially susceptible to ESD.) It is therefore critical that whenever the uIBX-250-BW is opened and any electrical component handled, the following anti-static precautions are strictly adhered to.

- ***Wear an anti-static wristband***: Wearing a simple anti-static wristband can help to prevent ESD from damaging the board.
- ***Self-grounding***: Before handling the board, touch any grounded conducting material. During the time the board is handled, frequently touch any conducting materials that are connected to the ground.
- ***Use an anti-static pad***: When configuring the uIBX-250-BW, place it on an anti-static pad. This reduces the possibility of ESD damaging the uIBX-250-BW.

3.2 Installation Precautions

During installation, be aware of the precautions below:

- **Read the user manual**: The user manual provides a complete description of the uIBX-250-BW, installation instructions and configuration options.
- **DANGER! Disconnect Power**: Power to the uIBX-250-BW must be disconnected during the installation process, or before any attempt is made to access the rear panel. Electric shock and personal injury might occur if the rear panel of the uIBX-250-BW is opened while the power cord is still connected to an electrical outlet.

- **Qualified Personnel**: The uIBX-250-BW must be installed and operated only by trained and qualified personnel. Maintenance, upgrades, or repairs may only be carried out by qualified personnel who are familiar with the associated dangers.
- **Air Circulation**: Make sure there is sufficient air circulation when installing the uIBX-250-BW. The uIBX-250-BW's cooling vents must not be obstructed by any objects. Blocking the vents can cause overheating of the uIBX-250-BW. Leave at least 5 cm of clearance around the uIBX-250-BW to prevent overheating.
- **Grounding**: The uIBX-250-BW should be properly grounded. The voltage feeds must not be overloaded. Adjust the cabling and provide external overcharge protection per the electrical values indicated on the label attached to the back of the uIBX-250-BW.

3.3 Installation and Configuration Steps

The following installation steps must be followed.

Step 1: Unpack the uIBX-250-BW.

Step 2: Configure the system.

Step 3: Connect peripheral devices to the uIBX-250-BW.

Step 4: Mount the uIBX-250-BW.

3.4 Hard Disk Drive (HDD) Installation

To install the hard drive, please follow the steps below:

Step 1: Remove three retention screws from the HDD cover (**Figure 3-1**).

Figure 3-1: Retention Screws Removal

Step 2: Open the HDD cover and locate the HDD bracket (**Figure 3-2**).

Figure 3-2: HDD Bracket

Step 3: Attach the HDD to the HDD bracket, and then slide the HDD to connect the HDD to the SATA connector. (**Figure 3-3**).

Figure 3-3: Insert the HDD

Step 4: Secure the HDD with the HDD bracket by four retention screws on the HDD cover.

Figure 3-4: HDD Retention Screws

Step 5: Replace the HDD cover and secure it using three previously removed retention screws.

3.5 Wireless LAN Module Installation (Optional)

To install the optional wireless LAN (WLAN) module, please follow the steps below.

Step 1: **Remove the bottom surface**. See **Section 3.4.**

Step 2: **Remove the two knockout holes** for antenna installation. The two knockout holes are located on the rear panel of the uIBX-250-BW as shown in **Figure 3-5**.

Figure 3-5: Knockout Holes for Wireless Antenna

Step 3: **Locate the PCIe Mini slot (Figure 3-6)**.

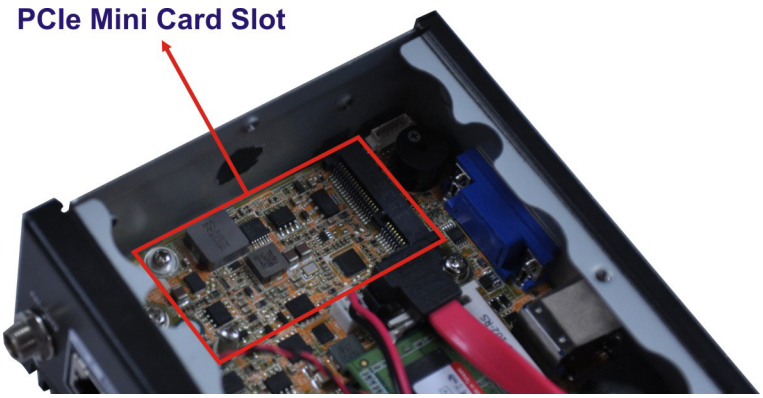

Figure 3-6: PCIe Mini Slot Location

Step 4: **Secure the WLAN module.** Secure the mechanical part to the WLAN card.

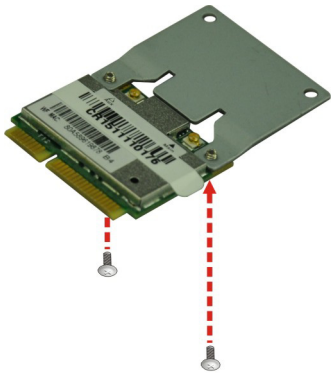

Figure 3-7: Securing the WLAN Module

Step 5: **Remove the retention screw.** Remove the retention screw for full-size card installation as shown in **Figure 3-8**.

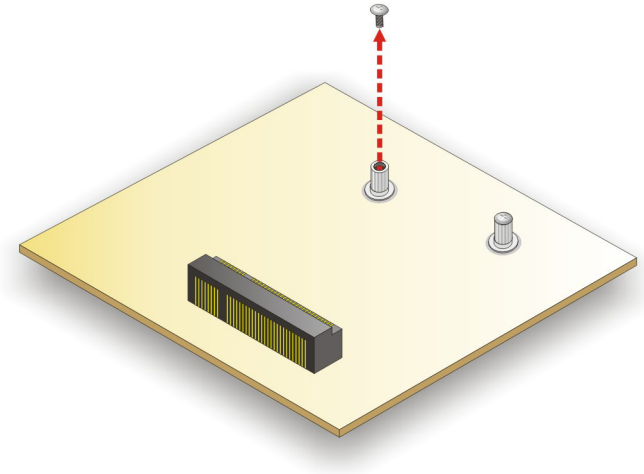

Figure 3-8: Removing the Retention Screw

Step 6: **Insert into the socket at an angle**. Line up the notch on the WLAN module with the notch on the slot. Slide the WLAN module into the slot at an angle of about 20º (**Figure 3-9**).

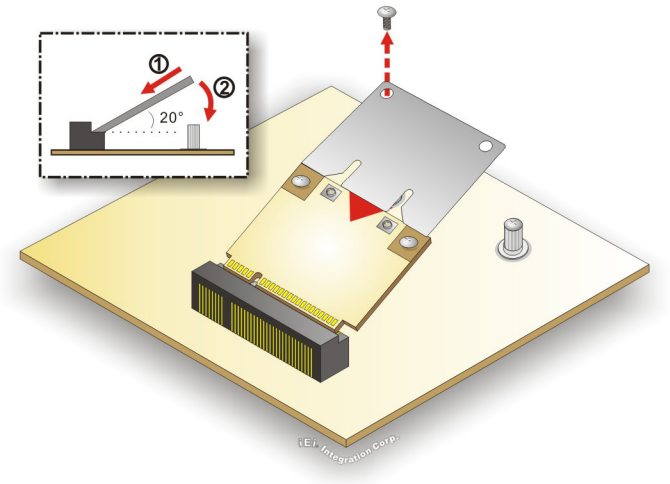

Figure 3-9: Inserting the WLAN Module

Step 7: **Secure the WLAN module**. Secure the WLAN module with the retention screw previously removed (**Figure 3-10**).

Step 8: **Connect the two RF cables** to the antenna connectors on the WLAN module (**Figure 3-10**).

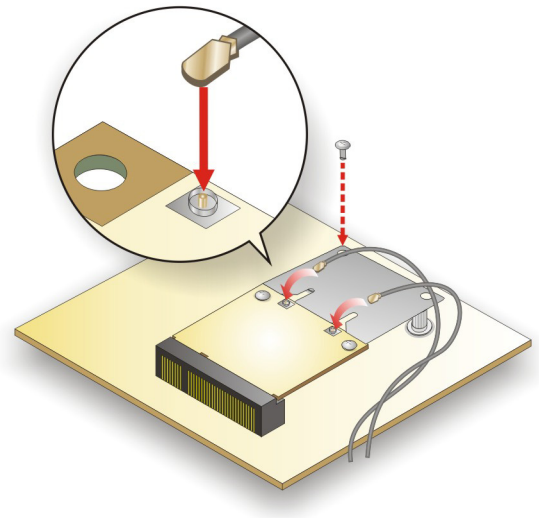

Figure 3-10: Securing WLAN Module and Connecting RF Cables

Step 9: **Remove the nut and washer from the SMA connector** at the other end of the RF cable.

Step 10: **Insert the SMA connector** to the antenna connector holes on the rear panel.

Step 11: **Secure the SMA connector** by inserting the washer and tightening it with nut.

Step 12: **Install the external antenna**.

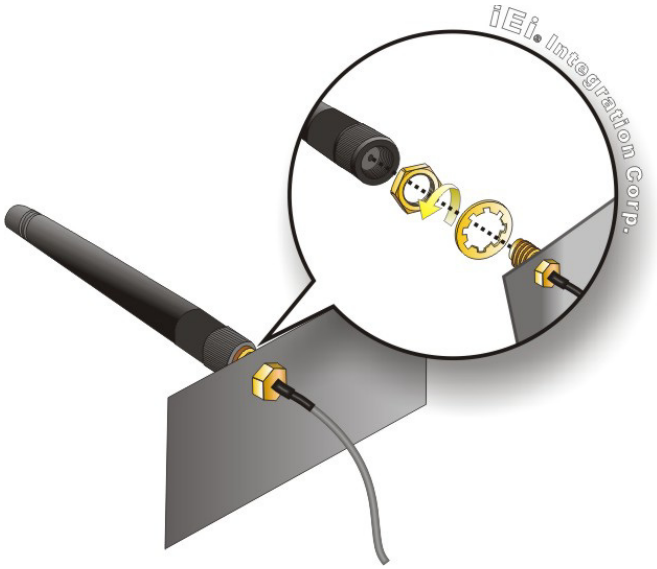

Figure 3-11: Securing SMA Connector and External Antenna Installation

3.6 AT/ATX Mode Selection

AT or ATX power mode can be used on the uIBX-250-BW. The selection is made through an AT/ATX switch located on the rear panel (Figure 3-12). To select AT mode or ATX mode, follow the steps below.

Step 1: Locate the AT/ATX switch on the rear panel (**Figure 3-12**).

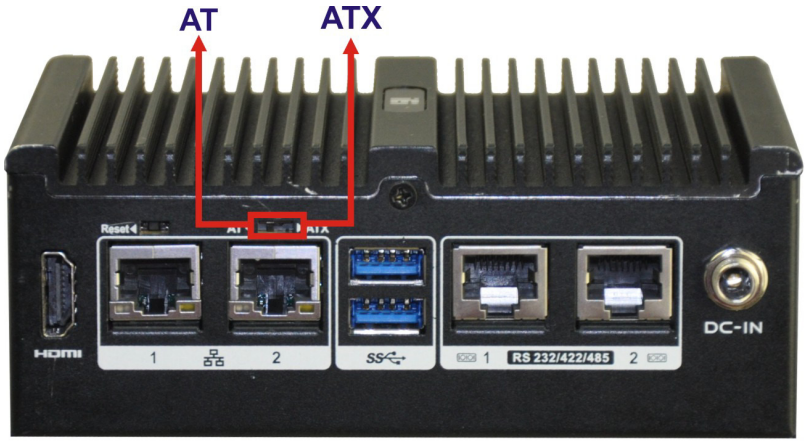

Figure 3-12: AT/ATX Switch Location

Step 2: Adjust the AT/ATX switch.

3.6.1 AT Power Mode

With the AT mode selected, the power is controlled by a central power unit rather than a power switch. The uIBX-250-BW panel PC turns on automatically when the power is connected. The AT mode benefits a production line to control multiple panel PCs from a central management center and other applications including:

- ATM
- Self-service kiosk
- Plant environment monitoring system
- Factory automation platform
- Manufacturing shop flow

3.6.2 ATX Power Mode

With the ATX mode selected, the uIBX-250-BW panel PC goes in a standby mode when it is turned off. The panel PC can be easily turned on via network or a power switch in standby mode. Remote power control is perfect for advertising applications since the broadcasting time for each panel PC can be set individually and controlled remotely. Other possible application includes:

- Security surveillance
- Point-of-Sale (POS)

- Advertising terminal

3.7 Reset the System

The reset button enables user to reboot the system when the system is turned on. To reboot the system, follow the steps below.

Step 1: Locate the reset button on the rear panel (**Figure 3-13**).

Figure 3-13: Reset Button Location

Step 2: Press the reset button.

3.8 Powering On/Off the System

- **Power on** the system: press the power button for 3 seconds
- **Power off** the system: press the power button for 6 seconds

Figure 3-14: Power Button Location

3.9 Mounting the System

3.9.1 Mounting the System with Mounting Brackets

To mount the embedded system onto a wall or some other surface using the two mounting brackets, please follow the steps below.

Step 1: Turn the embedded system over.

Step 2: Align the two retention screw holes in each bracket with the corresponding retention screw holes on the left side and right side.

Step 3: Secure the brackets to the system by inserting two retention screws into each bracket as illustrated in **Figure 3-15**.

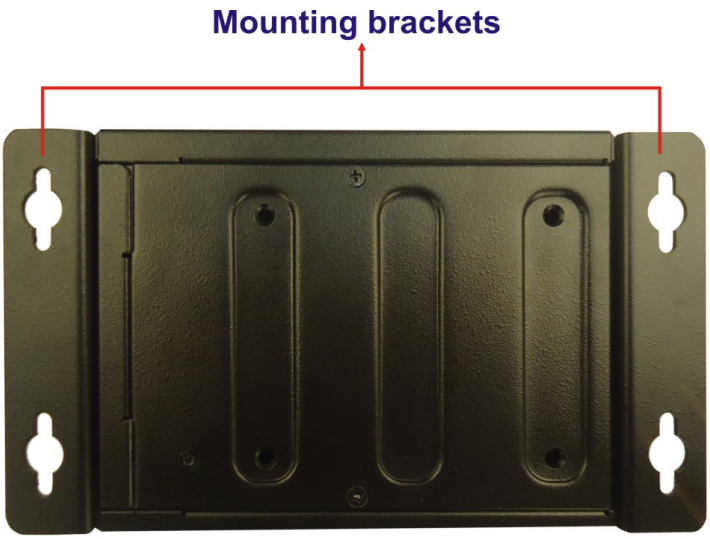

Figure 3-15: Mounting Bracket

Step 4: Drill holes in the intended installation surface.

Step 5: Align the mounting holes in the sides of the mounting brackets with the predrilled holes in the mounting surface.

Step 6: Insert four retention screws, two in each bracket, to secure the system to the wall.

3.9.2 Mounting the System with DIN Rail Mounting Kit

To mount the uIBX-250-BW embedded system onto a DIN rail, please follow the steps below.

Step 1: Attach the DIN rail mounting bracket to the bottom panel of the embedded system. Secure the bracket to the embedded system with the supplied retention screws (**Figure 3-16**).

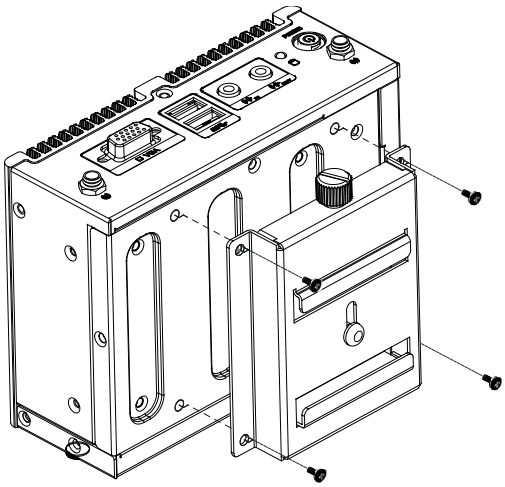

Figure 3-16: DIN Rail Mounting Bracket

Step 2: Make sure the inserted screw in the center of the bracket is at the lowest position of the elongated hole (**Figure 3-17**).

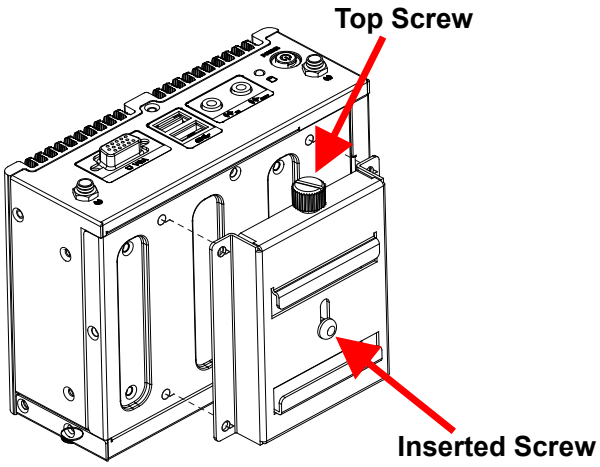

Figure 3-17: Screw Locations

Step 3: Place the DIN rail flush against the back of the mounting bracket making sure the edges of the rail are between the upper and lower clamps (**Figure 3-18**).

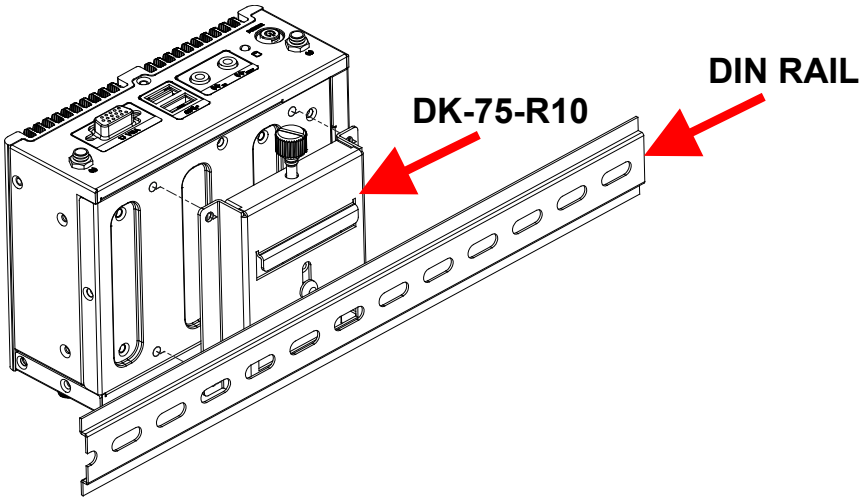

Figure 3-18: Mounting the DIN Rail

Step 4: Secure the DIN rail to the mounting bracket by turning the top screw clockwise. This draws the lower clamp up and secures the embedded system to the DIN rail (**Figure 3-19**).

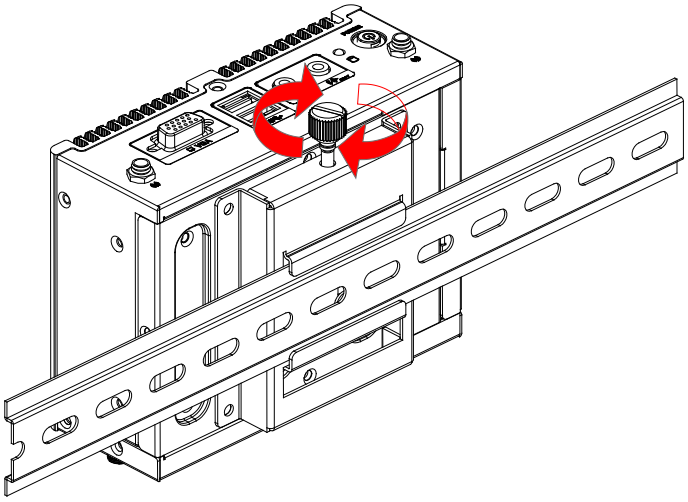

Figure 3-19: Secure the Assembly to the DIN Rail

3.10 RS-232/422/485 Serial Port Connection

The uIBX-250-BW has two RS-232/422/485 serial port connectors on the bottom panel. The two serial device slots (RJ-45) connect to a cable with a standard DB-9 connector at the other end (cables included). Follow the steps below to connect a serial device to the uIBX-250-BW.

Step 5: **Locate the RJ-45 connector**. The location of the RJ-45 serial port connector is shown in **Chapter 2**. The RJ-45 connectors for the serial ports can be identified easily as the RJ-45 for the network has two LEDs on the port, while the connectors for the serial cables don't.

Step 6: **Insert the RJ-45 to DB-9 cable.**

Step 7: **Insert the serial connector**. Insert the DB-9 connector of a serial device into the DB-9 connector on the cable. See **Figure 3-20**.

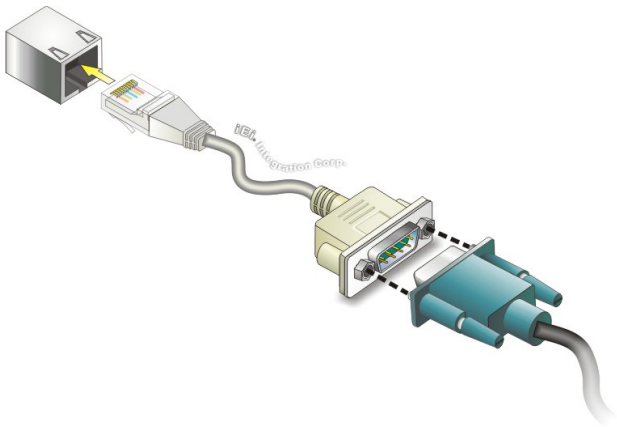

Figure 3-20: Serial Device Connector

Step 8: **Secure the connector**. Secure the serial device connector to the external interface by tightening the two retention screws on either side of the connector.

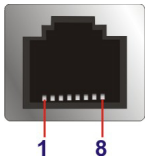

Figure 3-21: RJ-45 RS-232/422/485 Serial Port Connector

Pin	RS-232	RS-422	RS-485
1	NDCD1	TX-	DATA-
2	NDSR1		
3	NRX1	TX+	DATA+
4	NRTS1		
5	NTX1	RX+	
6	NCTS1		
7	NDTR1	RX-	
8	NRI1		

Table 3-1: RJ-45 RS-232/422/485 Serial Port Pinouts

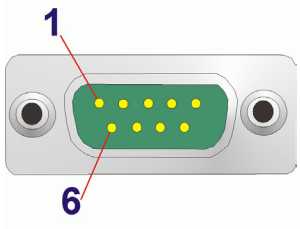

Figure 3-22: DB-9 RS-232/422/485 Connector Pinout Location

Pin	RS-232	RS-422	RS-485
1	NDCD	TX-	DATA-
2	NRX	TX+	DATA+
3	NTX	RX+	
4	NDTR	RX-	
5	GND		
6	NDSR		
7	NRTS		
8	NCTS		
9	NRI		

Table 3-2: DB-9 RS-232/422/485 Connector Pinouts

NOTE:

The communication protocol of the serial ports is set through the BIOS menu in "Advanced → F81866 Super IO Configuration → Serial Port 1/2 Configuration". Use the **Device Mode** BIOS option to configure the correspondent serial ports (refer to **Sections 4.3.2.1.1** and **4.3.2.1.2** for detailed information).

Chapter

4

BIOS

4.1 Introduction

The BIOS is programmed onto the BIOS chip. The BIOS setup program allows changes to certain system settings. This chapter outlines the options that can be changed.

NOTE:

Some of the BIOS options may vary throughout the life cycle of the product and are subject to change without prior notice.

4.1.1 Starting Setup

The UEFI BIOS is activated when the computer is turned on. The setup program can be activated in one of two ways.

1. Press the **DELETE** or **F2** key as soon as the system is turned on or
2. Press the **DELETE** or **F2** key when the "**Press Del to enter SETUP**" message appears on the screen.

If the message disappears before the **DELETE** or **F2** key is pressed, restart the computer and try again.

4.1.2 Using Setup

Use the arrow keys to highlight items, press **ENTER** to select, use the PageUp and PageDown keys to change entries, press **F1** for help and press **ESC** to quit. Navigation keys are shown in.

Key	Function
Up arrow	Move to previous item
Down arrow	Move to next item
Left arrow	Move to the item on the left hand side
Right arrow	Move to the item on the right hand side
+	Increase the numeric value or make changes

Key	Function
-	Decrease the numeric value or make changes
F1 key	General help, only for Status Page Setup Menu and Option Page Setup Menu
F2 key	Load previous values.
F3 key	Load optimized defaults
F4 key	Save changes and Exit BIOS
Esc key	Main Menu – Quit and not save changes into CMOS Status Page Setup Menu and Option Page Setup Menu -- Exit current page and return to Main Menu

Table 4-1: BIOS Navigation Keys

4.1.3 Getting Help

When **F1** is pressed a small help window describing the appropriate keys to use and the possible selections for the highlighted item appears. To exit the Help Window press **Esc** or the **F1** key again.

4.1.4 Unable to Reboot after Configuration Changes

If the computer cannot boot after changes to the system configuration is made, CMOS defaults. Use the jumper described in Chapter **3**.

4.1.5 BIOS Menu Bar

The **menu bar** on top of the BIOS screen has the following main items:

- Main – Changes the basic system configuration.
- Advanced – Changes the advanced system settings.
- Chipset – Changes the chipset settings.
- Security – Sets User and Supervisor Passwords.
- Boot – Changes the system boot configuration.
- Save & Exit – Selects exit options and loads default settings

The following sections completely describe the configuration options found in the menu items at the top of the BIOS screen and listed above.

4.2 Main

The **Main** BIOS menu (**BIOS Menu 1**) appears when the **BIOS Setup** program is entered. The **Main** menu gives an overview of the basic system information.

```
      Aptio Setup Utility – Copyright (C) 2016 American Megatrends, Inc.
  Main    Advanced   Chipset   Security    Boot    Save & Exit

BIOS Information                                  Set the Date. Use Tab to
BIOS Vendor                    American Megatrends switch between Data
Core Version                   5.11                elements.
Compliency                     UEFI 2.4; PI 1.3
Project Version                SEN2AR10.ROM
Build Date and Time            04/27/2016 11:43:31

iWDD Vendor                    iEi
iWDD Version                   SEN2ER10.bin

CPU Configuration
Microcode Patch                403
                                                  ---------------------
Memory Information
Total Memory                   2048 MB(LPDDR3)    ←→: Select Screen
                                                  ↑ ↓: Select Item
TXE Information                                   EnterSelect
Sec RC Version                 00.05.00.00        +/-: Change Opt.
TXE FW Version                 02.00.02.2092      F1:  General Help
                                                  F2:  Previous Values
System Date                    [Fri 05/27/2016]   F3:  Optimized Defaults
System Time                    [19:43:27]         F4:  Save & Exit
                                                  ESC: Exit
      Version 2.17.1249. Copyright (C) 2016 American Megatrends, Inc.
```

BIOS Menu 1: Main

The System Overview field also has two user configurable fields:

➔ System Date [xx/xx/xx]

Use the **System Date** option to set the system date. Manually enter the day, month and year.

➔ System Time [xx:xx:xx]

Use the **System Time** option to set the system time. Manually enter the hours, minutes and seconds.

4.3 Advanced

Use the **Advanced** menu (**BIOS Menu 2**) to configure the CPU and peripheral devices through the following sub-menus:

WARNING!

Setting the wrong values in the sections below may cause the system to malfunction. Make sure that the settings made are compatible with the hardware.

```
      Aptio Setup Utility - Copyright (C) 2016 American Megatrends, Inc.
  Main    Advanced  Chipset   Security    Boot    Save & Exit

> ACPI Settings                                   System ACPI Parameters.
> F81866 Super IO Configuration
> Hardware Monitor
> RTC Wake Settings
> Serial Port Console Redirection                 ----------------------
> iEi Feature                                     ←→: Select Screen
> CPU Configuration                               ↑ ↓: Select Item
> SATA Configuration                              EnterSelect
> USB Configuration                               F1   General Help
                                                  F2   Previous Values
                                                  F3   Optimized Defaults
                                                  F4   Save
                                                  ESC  Exit
        Version 2.17.1249. Copyright (C) 2016 American Megatrends, Inc.
```

BIOS Menu 2: Advanced

4.3.1 ACPI Settings

The **ACPI Settings** menu (**BIOS Menu 3**) configures the Advanced Configuration and Power Interface (ACPI) options.

```
Aptio Setup Utility - Copyright (C) 2016 American Megatrends, Inc.
Advanced

ACPI Settings

ACPI Sleep State                    [S3 (Suspend to RAM]

                                    ----------------------
                                    ←→: Select Screen
                                    ↑↓: Select Item
                                    EnterSelect
                                    +/-: Change Opt.
                                    F1:  General Help
                                    F2:  Previous Values
                                    F3:  Optimized Defaults
                                    F4:  Save & Exit
                                    ESC: Exit

Version 2.17.1249. Copyright (C) 2016 American Megatrends, Inc.
```

BIOS Menu 3: ACPI Configuration

➔ ACPI Sleep State [S3 only (Suspend to RAM)]

The fields in **ACPI Sleep State** option cannot be changed.

➔ **Suspend Disabled**	Disable the suspend function.
➔ **S3 (Suspend to RAM)** DEFAULT	The caches are flushed and the CPU is powered off. Power to the RAM is maintained. The computer returns slower to a working state, but more power is saved.

4.3.2 F81866 Super IO Configuration

Use the **F81866 Super IO Configuration** menu (**BIOS Menu 12**) to set or change the configurations for the serial ports.

```
Aptio Setup Utility - Copyright (C) 2016 American Megatrends, Inc.
Advanced

F81866 Super IO Configuration                    Set Parameters of Serial
                                                 Port 1 (COMA)
Super IO Chip                    F81866
> Serial Port 1 Configuration                    ---------------------
> Serial Port 2 Configuration                    ←→: Select Screen
                                                 ↑ ↓: Select Item
                                                 EnterSelect
                                                 F1   General Help
                                                 F2   Previous Values
                                                 F3    Optimized
                                                 Defaults
                                                 F4    Save
                                                 ESC   Exit
Version 2.17.1249. Copyright (C) 2016 American Megatrends, Inc.
```

BIOS Menu 4: Super IO Configuration

4.3.2.1 Serial Port n Configuration

Use the **Serial Port n Configuration** menu (**BIOS Menu 5**) to configure the serial port n.

```
Aptio Setup Utility - Copyright (C) 2013 American Megatrends, Inc.
Advanced

Serial Port 1 Configuration                      Enable or Disable Serial
                                                 Port (COM)
Serial Port                      [Enabled]
Device Settings                  IO=3F8h; IRQ=4
                                                 ---------------------
Change Settings                  [Auto]          ←→: Select Screen
Device Mode                      [RS232]         ↑ ↓: Select Item
                                                 EnterSelect
                                                 F1   General Help
                                                 F2   Previous Values
                                                 F3    Optimized
                                                 Defaults
                                                 F4    Save
                                                 ESC   Exit
Version 2.16.1242. Copyright (C) 2013 American Megatrends, Inc.
```

BIOS Menu 5: Serial Port 1 Configuration Menu

4.3.2.1.1 Serial Port 1 Configuration

➔ Serial Port [Enabled]

Use the **Serial Port** option to enable or disable the serial port.

➔ **Disabled**		Disable the serial port
➔ **Enabled**	**DEFAULT**	Enable the serial port

➔ Change Settings [Auto]

Use the **Change Settings** option to change the serial port IO port address and interrupt address.

➔ **Auto**	**DEFAULT**	The serial port IO port address and interrupt address are automatically detected.
➔ **IO=3F8h; IRQ=4**		Serial Port I/O port address is 3F8h and the interrupt address is IRQ4
➔ **IO=3F8h; IRQ=3, 4,5,6,7,9,10,11,12**		Serial Port I/O port address is 3F8h and the interrupt address is IRQ3,4,5,6,7,9,10,11,12
➔ **IO=2F8h; IRQ=3, 4,5,6,7,9,10,11,12**		Serial Port I/O port address is 2F8h and the interrupt address is IRQ3,4,5,6,7,9,10,11,12
➔ **IO=3E8h; IRQ=3, 4,5,6,7,9,10,11,12**		Serial Port I/O port address is 3E8h and the interrupt address is IRQ3,4,5,6,7,9,10,11,12
➔ **IO=2E8h; IRQ=3, 4,5,6,7,9,10,11,12**		Serial Port I/O port address is 2E8h and the interrupt address is IRQ3,4,5,6,7,9,10,11,12

➔ Device Mode [RS232]

Use the **Device Mode** option to select the serial port mode.

➔ **RS232**	**DEFAULT**	Enables serial port RS-232 support.
➔ **RS422**		Enables serial port RS-422 support.
➔ **RS485**		Enables serial port RS-485 support.

4.3.2.1.2 Serial Port 2 Configuration

➔ Serial Port [Enabled]

Use the **Serial Port** option to enable or disable the serial port.

➔ **Disabled**		Disable the serial port
➔ **Enabled**	**DEFAULT**	Enable the serial port

➔ Change Settings [Auto]

Use the **Change Settings** option to change the serial port IO port address and interrupt address.

➔ **Auto**	**DEFAULT**	The serial port IO port address and interrupt address are automatically detected.
➔ **IO=2F8h; IRQ=3**		Serial Port I/O port address is 2F8h and the interrupt address is IRQ3
➔ **IO=3F8h; IRQ=3, 4,5,6,7,9,10,11,12**		Serial Port I/O port address is 3F8h and the interrupt address is IRQ3,4,5,6,7,9,10,11,12
➔ **IO=2F8h; IRQ=3, 4,5,6,7,9,10,11,12**		Serial Port I/O port address is 2F8h and the interrupt address is IRQ3,4,5,6,7,9,10,11,12
➔ **IO=3E8h; IRQ=3, 4,5,6,7,9,10,11,12**		Serial Port I/O port address is 3E8h and the interrupt address is IRQ3,4,5,6,7,9,10,11,12
➔ **IO=2E8h; IRQ=3, 4,5,6,7,9,10,11,12**		Serial Port I/O port address is 2E8h and the interrupt address is IRQ3,4,5,6,7,9,10,11,12

➔ Device Mode [RS232]

Use the **Device Mode** option to select the serial port mode.

➔ **RS232**	**DEFAULT**	Enables serial port RS-232 support.
➔ **RS422**		Enables serial port RS-422 support.
➔ **RS485**		Enables serial port RS-485 support.

4.3.3 Hardware Monitor

The Hardware Monitor menu (**BIOS Menu 6**) contains the fan configuration submenus and displays operating temperature, fan speeds and system voltages.

```
Aptio Setup Utility - Copyright (C) 2016 American Megatrends, Inc.
Advanced

PC Health Status                                  Enable or Disable Smart
                                                  Fan
> Smart Fan Function
CPU temperature                  :+40 C
DRAM temperature                 :+38 C
SYS temperature                  :+43 C
Fan1 Speed                       :N/A
VCC0_CPU                         :+0.850 V
VGG                              :+0.727 V        ---------------------
VDDQ                             :+1.337 V        ←→: Select Screen
PSV                              :+5.048 V        ↑↓: Select Item
P12V                             :+12.182 V       EnterSelect
                                                  + -   Change Opt.
                                                  F1    General Help
                                                  F2    Previous Values
                                                  F3    Optimized Defaults
                                                  F4    Save & Exit
                                                  ESC   Exit
Version 2.17.1249. Copyright (C) 2016 American Megatrends, Inc.
```

BIOS Menu 6: Hardware Monitor

➔ PC Health Status

The following system parameters and values are shown. The system parameters that are monitored are:

- Temperatures:
  - CPU Temperature
  - DRAM temperature
  - SYS temperature
- Fan Speed:
  - CPU Fan Speed
- Voltages:
  - VCC0_CPU
  - VGG
  - VDDQ

- PSV
- P12V

4.3.3.1 Smart Fan Mode Configuration

Use the **Smart Fan Mode Configuration submenu** (**BIOS Menu 7**) to configure fan temperature and speed settings.

```
Aptio Setup Utility - Copyright (C) 2016 American Megatrends, Inc.
Advanced

Smart Fan Mode Configuration                    CPU Smart Fan control
                                                settings.
CPU Smart Fan control          [Auto PWM Mode]
Temperature of Off             75
Temperature of Start           80
Start PWM                      30
Slope(Duty Cycle)              [4]              ---------------------
                                                ←→: Select Screen
                                                ↑ ↓: Select Item
                                                EnterSelect
                                                + -   Change Opt.
                                                F1    General Help
                                                F2    Previous Values
                                                F3    Optimized Defaults
                                                F4    Save & Exit
                                                ESC   Exit
Version 2.17.1249. Copyright (C) 2016 American Megatrends, Inc.
```

BIOS Menu 7: Smart Fan Mode Configuration

➔ CPU Smart Fan control [Auto PWM Mode]

Use the **CPU Smart Fan control** BIOS option to configure the CPU Smart Fan.

➔ **Manual PWM Mode** — The fan spins at the speed set in the manual PWM setting

➔ **Auto PWM Mode** **DEFAULT** — The fan adjusts its speed using these settings:

- Temperature of Off
- Temperature of Start
- Start PWM
- Slope (Duty Cycle)

➔ Temperature of Off [75]

WARNING:

Setting this value too high may cause the fan to speed up only when the CPU is at a very high temperature and therefore cause the system to be damaged.

The **Temperature of Off** option can only be set if the **CPU Smart Fan control** option is set to **Auto Mode**. If the CPU temperature is lower than **Temperature of Off**, the fan speed change to be lowest. To set a value, select the **Temperature of Off** option and enter a decimal number between 0 and 127. The temperature range is specified below.

- Minimum Value: 0°C
- Maximum Value: 127°C

➔ Temperature of Start [80

WARNING:

Setting this value too high may cause the fan to rotate at full speed only when the CPU is at a very high temperature and therefore cause the system to be damaged.

The **Temperature of Start** option can only be set if the **CPU Smart Fan control** option is set to **Auto Mode**. If the CPU temperature is between **Temperature of Off** and **Temperature of Start**, the fan speed change to be **Start PWM**. To set a value, select the **Temperature of Start** option and enter a decimal number between 0 and 127. The temperature range is specified below.

- Minimum Value: 0°C
- Maximum Value: 127°C

➔ Start PWM [30]

The **Start PWM** option can only be set if the **CPU Smart Fan control** option is set to **Auto Mode**. Use the **Start PWM** option to set the PWM start value. To set a value, select the **Start PWM** option and enter a decimal number between 0 and 100. The temperature range is specified below.

- Minimum Value: 0
- Maximum Value: 100

➔ Slope (Duty Cycle) [4]

The **Slope (Duty Cycle)** option can only be set if the **CPU Smart Fan control** option is set to **Auto Mode**. Use the **Slope (Duty Cycle)** option to select the linear rate at which the PWM mode increases with respect to an increase in temperature. A list of available options is shown below:

- 0
- 1
- 2
- 4
- 8
- 16

4.3.4 RTC Wake Settings

The **RTC Wake Settings** menu (**BIOS Menu 8**) configures RTC wake event.

```
Aptio Setup Utility - Copyright (C) 2016 American Megatrends, Inc.
Advanced

Wake system with Fixed Time      [Disabled]

                                 Enable or disable System
                                 wake on alarm event. When
                                 enabled, System will
                                 wake on the
                                 date::hr::min::sec
                                 specified

                                 ----------------------
                                 ←→: Select Screen
                                 ↑ ↓: Select Item
                                 EnterSelect
                                 F1   General Help
                                 F2   Previous Values
                                 F3   Optimized Defaults
                                 F4   Save
                                 ESC  Exit
Version 2.17.1249. Copyright (C) 2016 American Megatrends, Inc.
```

BIOS Menu 8: RTC Wake Settings

➔ Wake system with Fixed Time [Disabled]

Use the **Wake system with Fixed Time** option to enable or disable the system wake on alarm event.

➔ **Disabled** **DEFAULT** The real time clock (RTC) cannot generate a wake event

➔ **Enabled** If selected, the **Wake up every day** option appears allowing you to enable to disable the system to wake every day at the specified time. Besides, the following options appear with values that can be selected:

Wake up date

Wake up hour

Wake up minute

Wake up second

After setting the alarm, the computer turns itself on from a suspend state when the alarm goes off.

4.3.5 Serial Port Console Redirection

The **Serial Port Console Redirection** menu (**BIOS Menu 17**) allows the console redirection options to be configured. Console redirection allows users to maintain a system remotely by re-directing keyboard input and text output through the serial port.

```
Aptio Setup Utility - Copyright (C) 2016 American Megatrends, Inc.
Advanced

 COM1                                          Console Redirection
 Console Redirection            [Disabled]     Enable or Disable
> Console Redirection Settings

 COM2                                          ---------------------
 Console Redirection            [Disabled]     ←→: Select Screen
> Console Redirection Settings                  ↑ ↓: Select Item
                                               EnterSelect
                                               F1   General Help
                                               F2   Previous Values
                                               F3    Optimized
                                               Defaults
                                               F4    Save
                                               ESC   Exit

Version 2.17.1249. Copyright (C) 2016 American Megatrends, Inc.
```

BIOS Menu 9: Serial Port Console Redirection

➔ Console Redirection [Disabled]

Use **Console Redirection** option to enable or disable the console redirection function.

➔ **Disabled**	**DEFAULT**	Disabled the console redirection function
➔ **Enabled**		Enabled the console redirection function

4.3.5.1 Console Redirection Settings

The **Console Redirection Settings** menu (**BIOS Menu 10**) allows the console redirection options to be configured. The option is active when Console Redirection option is enabled.

```
Aptio Setup Utility - Copyright (C) 2016 American Megatrends, Inc.
Advanced

COM1
Console Redirection Settings

Terminal Type                    [ANSI]
Bits per second                  [115200]
Data Bits                        [8]
Parity                           [None]
Stop Bits                        [1]

Emulation: ANSI:
Extended ASCII char set.
VT100: ASCII char set.
VT100+: Extends VT100 to
support color, function
keys, etc. VT-UTF8: Uses
UTF8 encoding to map
Unicode chars onto 1 or
more bytes.

---------------------
←→: Select Screen
↑↓: Select Item
EnterSelect
F1   General Help
F2   Previous Values
F3    Optimized
Defaults
F4    Save
ESC   Exit

Version 2.17.1249. Copyright (C) 2016 American Megatrends, Inc.
```

BIOS Menu 10: Console Redirection Settings

➔ Terminal Type [ANSI]

Use the **Terminal Type** option to specify the remote terminal type.

➔ **VT100**		The target terminal type is VT100
➔ **VT100+**		The target terminal type is VT100+
➔ **VT-UTF8**		The target terminal type is VT-UTF8
➔ **ANSI**	**DEFAULT**	The target terminal type is ANSI

➔ Bits per second [115200]

Use the **Bits per second** option to specify the serial port transmission speed. The speed must match the other side. Long or noisy lines may require lower speeds.

➔ **9600**	Sets the serial port transmission speed at 9600.
➔ **19200**	Sets the serial port transmission speed at 19200.

- **38400** — Sets the serial port transmission speed at 38400.
- **57600** — Sets the serial port transmission speed at 57600.
- **115200** **DEFAULT** — Sets the serial port transmission speed at 115200.

➔ Data Bits [8]

Use the **Data Bits** option to specify the number of data bits.

- **7** — Sets the data bits at 7.
- **8** **DEFAULT** — Sets the data bits at 8.

➔ Parity [None]

Use the **Parity** option to specify the parity bit that can be sent with the data bits for detecting the transmission errors.

- **None** **DEFAULT** — No parity bit is sent with the data bits.
- **Even** — The parity bit is 0 if the number of ones in the data bits is even.
- **Odd** — The parity bit is 0 if the number of ones in the data bits is odd.
- **Mark** — The parity bit is always 1. This option does not provide error detection.
- **Space** — The parity bit is always 0. This option does not provide error detection.

➔ Stop Bits [1]

Use the **Stop Bits** option to specify the number of stop bits used to indicate the end of a serial data packet. Communication with slow devices may require more than 1 stop bit.

- **1** **DEFAULT** — Sets the number of stop bits at 1.
- **2** — Sets the number of stop bits at 2.

4.3.6 iEi Feature

Use the **iEi Feature** menu (**BIOS Menu 11**) to configure the iEi features.

```
Aptio Setup Utility - Copyright (C) 2016 American Megatrends, Inc.
Advanced

iEi Feature                                   Auto Recovery Function
                                              Reboot and recover
Auto Recovery Function          [Disabled]    system automatically
                                              within 10 min, when OS
                                              crashes. Please install
                                              Auto Recovery API
                                              service before enabling
                                              this function.

                                              ---------------------
                                              ←→: Select Screen
                                              ↑ ↓: Select Item
                                              EnterSelect
                                              +/-: Change Opt.
                                              F1:  General Help
                                              F2:  Previous Values
                                              F3:  Optimized Defaults
                                              F4:  Save & Exit
                                              ESC: Exit
Version 2.17.1249. Copyright (C) 2016 American Megatrends, Inc.
```

BIOS Menu 11: iEi Feature

➔ Auto Recovery Function [Disabled]

Use **Auto Recovery Function** option to enable or disable the auto recovery function.

➔ **Disabled** **DEFAULT** Disabled the auto recovery function

➔ **Enabled** Enabled the auto recovery function

4.3.7 CPU Configuration

Use the **CPU Configuration** menu (**BIOS Menu 12**) to view detailed CPU specifications and configure the CPU.

```
Aptio Setup Utility - Copyright (C) 2016 American Megatrends, Inc.
Advanced

CPU Configuration                                  When enabled, a VMM can
                                                   utilize the additional
Intel(R) Celeron(R) CPU N3160 @ 1.60GHz            hardware capabilities
CPU Signature                    406C4             provided by Vanderpool
Microcode Patch                  403               Technology.
Max CPU Speed                    1600 MHz
Min CPU Speed                    480 MHz
Processor Cores                  4
Intel HT Technology              Not Supported
Intel VT-x Technology            Supported

L1 Data Cache                    24 KB x 4         ----------------------
L1 Code Cache                    32 KB x 4
L2 Cache                         1024 KB x 2       ←→: Select Screen
L3 Cache                         Not Present       ↑↓: Select Item
CPU Speed                        1834 MHz          EnterSelect
64-bit                           Supported         F1   General Help
                                                   F2   Previous Values
Intel Virtualization Technology  [Enabled]         F3    Optimized
EIST                             [Enabled]         Defaults
CPU C state Report               [Enabled]         F4    Save
                                                   ESC   Exit
Version 2.17.1249. Copyright (C) 2016 American Megatrends, Inc.
```

BIOS Menu 12: CPU Configuration

➔ Intel® Virtualization Technology [Disabled]

Use the **Intel® Virtualization Technology** option to enable or disable virtualization on the system. When combined with third party software, Intel Virtualization technology allows several OSs to run on the same system at the same time.

➔ **Disabled**	**DEFAULT**	Disables Intel Virtualization Technology.
➔ **Enabled**		Enables Intel Virtualization Technology.

➔ EIST [Enabled]

Use the **EIST** option to enable or disable the Intel Speed Step Technology.

➔ **Disabled** Disables the Intel Speed Step Technology.

➔ **Enabled** **DEFAULT** Enables the Intel Speed Step Technology.

➔ CPU C state Report [Disabled]

Use the **CPU C state Report** option to enable or disable the CPU C state report to OS.

➔ **Disabled** **DEFAULT** Disables the CPU C state report to OS.

➔ **Enabled** Enables the CPU C state report to OS.

4.3.8 SATA Configuration

Use the **SATA Configuration** menu (**BIOS Menu 13**) to change and/or set the configuration of the SATA devices installed in the system.

```
Aptio Setup Utility - Copyright (C) 2016 American Megatrends, Inc.
Advanced

ATA Configuration                                  Enable/Disable SATA
                                                   Device.
SATA Controller                  [Enabled]
SATA Mode Selection              [ACHI]

                                                   ---------------------
SATA Port1
Not Present                                        ←→: Select Screen
Hot Plug                         [Disabled]        ↑↓: Select Item
                                                   EnterSelect
                                                   F1   General Help
                                                   F2   Previous Values
                                                   F3    Optimized
                                                   Defaults
                                                   F4    Save
                                                   ESC   Exit
Version 2.17.1249. Copyright (C) 2016 American Megatrends, Inc.
```

BIOS Menu 13: IDE Configuration

➔ SATA Controller [Enabled]

Use the **SATA Controller** option to enable or disable the SATA device.

➔ **Disabled** Disables the SATA device.

➔ **Enabled** **DEFAULT** Enables the SATA device.

➔ SATA Mode Selection [AHCI]

Use the **SATA Mode Selection** option to configure SATA devices as normal IDE devices.

➔ **AHCI** **DEFAULT** Configures SATA devices as AHCI device.

➔ Hot Plug [Disabled]

Use the **Hot Plug** option to configure the port as Hot Pluggable.

➔ **Disabled** **DEFAULT** Disables the port as Hot Pluggable.

➔ **Enabled** Enables the port as Hot Pluggable.

4.3.9 USB Configuration

Use the **USB Configuration** menu (**BIOS Menu 14**) to read USB configuration information and configure the USB settings.

```
Aptio Setup Utility - Copyright (C) 2016 American Megatrends, Inc.
Advanced

USB Configuration                                  Enables Legacy USB
                                                   support. AUTO option
USB Devices:                                       disables legacy support
      1 Keyboard                                   if no USB devices are
                                                   connected. DISABLE
Legacy USB Support              [Enabled]          option will keep USB
                                                   devices available only
                                                   for EFI applications.

                                                   ---------------------
                                                   ←→: Select Screen
                                                   ↑ ↓: Select Item
                                                   EnterSelect
                                                   F1   General Help
                                                   F2   Previous Values
                                                   F3    Optimized
                                                   Defaults
                                                   F4    Save
                                                   ESC   Exit
Version 2.17.1249. Copyright (C) 2016 American Megatrends, Inc.
```

BIOS Menu 14: USB Configuration

➔ USB Devices

The **USB Devices Enabled** field lists the USB devices that are enabled on the system

➔ Legacy USB Support [Enabled]

Use the **Legacy USB Support** BIOS option to enable USB mouse and USB keyboard support. Normally if this option is not enabled, any attached USB mouse or USB keyboard does not become available until a USB compatible operating system is fully booted with all USB drivers loaded. When this option is enabled, any attached USB mouse or USB keyboard can control the system even when there is no USB driver loaded onto the system.

➔ **Enabled**	**DEFAULT**	Legacy USB support enabled
➔ **Disabled**		Legacy USB support disabled
➔ **Auto**		Legacy USB support disabled if no USB devices are connected

4.4 Chipset

Use the **Chipset** menu (**BIOS Menu 15**) to access the Northbridge and Southbridge configuration menus

WARNING!

Setting the wrong values for the Chipset BIOS selections in the Chipset BIOS menu may cause the system to malfunction.

```
Aptio Setup Utility - Copyright (C) 2016 American Megatrends, Inc.
Main    Advanced    Chipset    Security    Boot    Save & Exit

> North Bridge                          North Bridge Parameters
> South Bridge

                                        ---------------------
                                        ←→: Select Screen
                                        ↑↓: Select Item
                                        EnterSelect
                                        +/-:  Change Opt.
                                        F1    General Help
                                        F2    Previous Values
                                        F3    Optimized Defaults
                                        F4    Save & Exit
                                        ESC   Exit
Version 2.17.1249. Copyright (C) 2016 American Megatrends, Inc.
```

BIOS Menu 15: Chipset

4.4.1 North Bridge Configuration

Use the **North Bridge Configuration** menu (**BIOS Menu 16**) to configure the Intel IGD settings.

```
Aptio Setup Utility - Copyright (C) 2016 American Megatrends, Inc.
                    Chipset

> Intel IGD Configuration               Configure Intel IGD
                                        Settings.
Memory Information
Total Memory                  2048 MB(LPDDR3)
Memory Slot0                  2048 MB(LPDDR3)

                                        ---------------------
                                        ←→: Select Screen
                                        ↑↓: Select Item
                                        EnterSelect
                                        +/-:  Change Opt.
                                        F1:   General Help
                                        F2:   Previous Values
                                        F3:   Optimized Defaults
                                        F4:   Save & Exit
                                        ESC:  Exit
Version 2.17.1249. Copyright (C) 2016 American Megatrends, Inc.
```

BIOS Menu 16: Northbridge Chipset Configuration

➔ Memory Information

The **Memory Information** lists a brief summary of the on-board memory. The fields in **Memory Information** cannot be changed.

4.4.1.1 Intel IGD Configuration

Use the **Intel IGD Configuration** menu (**BIOS Menu 17**) to configure the video device connected to the system.

```
Aptio Setup Utility - Copyright (C) 2016 American Megatrends, Inc.
                    Chipset

Intel IGD Configuration                          Enable: Enabled Integrated
                                                 Graphics Device (IGD) when
Integrated Graphics Device        [Enabled]      selected as the Primary
                                                 Video Adaptor. Disable:
Primary Display                   [Auto]         Always disable IGD
DVMT Pre-Allocated                [256M]
DVMT Total Gfx Mem                [Max]          ---------------------
                                                 ←→: Select Screen
Primary IGFX Boot Display         [Auto]         ↑ ↓: Select Item
                                                 Enter Select
                                                 +/-:  Change Opt.
                                                 F1:   General Help
                                                 F2:   Previous Values
                                                 F3:   Optimized Defaults
                                                 F4:   Save & Exit
                                                 ESC:  Exit
Version 2.17.1249. Copyright (C) 2016 American Megatrends, Inc.
```

BIOS Menu 17: Integrated Graphics

➔ **Integrated Graphics Device** [Enabled]

Use the **Integrated Graphics Device** BIOS option to enable or disable the Integrated Graphics Device (IGD) as the primary video adaptor,

➔ **Enabled**	**DEFAULT**	Enable the Integrated Graphics Device (IGD).
➔ **Disabled**		Disable the Integrated Graphics Device (IGD).

➔ Primary Display [Auto]

Use the **Primary Display** option to select the primary graphics controller the system uses. The following options are available:

- Auto **Default**
- IGD
- PCIe

➔ DVMT Pre-Allocated [256MB]

Use the **DVMT Pre-Allocated** option to set the amount of system memory allocated to the integrated graphics processor when the system boots. The system memory allocated can then only be used as graphics memory, and is no longer available to applications or the operating system. Configuration options are listed below:

- 64M
- 128M
- 256M **Default**
- 512M

➔ DVMT Total Gfx Mem [Max]

Use the **DVMT Total Gfx Mem** option to select DVMT5.0 total graphic memory size used by the internal graphic device. The following options are available:

- 128M
- 256M
- Max **Default**

➔ Primary IGFX Boot Display [Auto]

Use the **Primary IGFX Boot Display** option to select the display device used by the system when it boots. Configuration options are listed below.

- Auto **DEFAULT**
- CRT
- HDMI

4.4.2 Southbridge Configuration

Use the **Southbridge Configuration** menu (**BIOS Menu 18**) to configure the Southbridge chipset.

```
Aptio Setup Utility - Copyright (C) 2016 American Megatrends, Inc.
                    Chipset

Auto Power Button Status        [Enabled(AT)]        Control Detection of the
                                                     Azalia device.
Audio Configuration                                  Disabled = Azalia will be
Audio Controller                [Enabled]            unconditionally disabled
Azalia HDMI Codec               [Enabled]            Enabled = Azalia will be
Azalia HDMI Codec Port B        [Enabled]            unconditionally enabled

Power Saving Function(EUP)      [Disabled]           ---------------------
                                                     ←→: Select Screen
                                                     ↑ ↓: Select Item
                                                     EnterSelect
                                                     +/-:  Change Opt.
                                                     F1:   General Help
                                                     F2:   Previous Values
                                                     F3:   Optimized Defaults
                                                     F4:   Save & Exit
                                                     ESC:  Exit
Version 2.17.1249. Copyright (C) 2016 American Megatrends, Inc.
```

BIOS Menu 18: Southbridge Chipset Configuration

➔ Audio Controller [Enabled]

Use the **Audio Controller** option to enable or disable the High Definition Audio controller.

➔ **Disabled** The onboard High Definition Audio controller is disabled

➔ **Enabled** **DEFAULT** The onboard High Definition Audio controller is detected automatically and enabled

➔ Azalia HDMI codec [Enabled]

Use the **Azalia HDMI codec** option to enable or disable the internal HDMI codec for Azalia.

➔ **Disabled** Disable internal HDMI codec for Azalia

➔ **Enabled** **DEFAULT** Enable internal HDMI codec for Azalia

➔ Azalia HDMI codec Port B [Enabled]

Use the **Azalia HDMI codec Port B** option to enable or disable the internal HDMI port codec for Azalia.

- ➔ **Disabled** Disable internal HDMI port codec for Azalia
- ➔ **Enabled** **DEFAULT** Enable internal HDMI port codec for Azalia

➔ Power Saving Function (EUP) [Disabled]

Use the **Power Saving Function (EUP)** option to enable or disable the power saving function.

- ➔ **Disabled** **DEFAULT** Power saving function is disabled.
- ➔ **Enabled** Power saving function is enabled. It will reduce power consumption when the system is off.

4.5 Security

Use the **Security** menu (**BIOS Menu 19**) to set system and user passwords.

```
      Aptio Setup Utility – Copyright (C) 2016 American Megatrends, Inc.
  Main    Advanced   Chipset   Security    Boot    Save & Exit

Password Description                          Set Setup Administrator
                                              Password
If ONLY the Administrator's password is set,
then this only limits access to Setup and is
only asked for when entering Setup            ---------------------
If ONLY the User's password is set, then this  ←→: Select Screen
is a power on password and must be entered to  ↑ ↓: Select Item
boot or enter Setup. In Setup the User will    EnterSelect
have Administrator rights.                     F1   General Help
The password length must be:                   F2   Previous Values
Minimum length                  3              F3    Optimized
Maximum length                  20             Defaults
                                               F4    Save
Administrator Password                         ESC   Exit
User Password

        Version 2.17.1249. Copyright (C) 2016 American Megatrends, Inc.
```

BIOS Menu 19: Security

➔ Administrator Password

Use the **Administrator Password** to set or change a administrator password.

➔ User Password

Use the **User Password** to set or change a user password.

4.6 Boot

Use the **Boot** menu (**BIOS Menu 20**) to configure system boot options.

```
      Aptio Setup Utility - Copyright (C) 2016 American Megatrends, Inc.
  Main    Advanced   Chipset   Security    Boot    Save & Exit

Boot Configuration                                  Select the keyboard
Bootup NumLock State              [On]              NumLock state
Quiet Boot                        [Enabled]
UEFI Boot                         [Disabled]
                                                    ---------------------
Launch PXE OpROM                  [Disabled]        ←→: Select Screen
Option ROM Messages               [Force BIOS]      ↑ ↓: Select Item
                                                    EnterSelect
Boot Option Priorities                              F1   General Help
                                                    F2   Previous Values
                                                    F3    Optimized
                                                    Defaults
                                                    F4    Save
                                                    ESC   Exit
        Version 2.17.1249. Copyright (C) 2016 American Megatrends, Inc.
```

BIOS Menu 20: Boot

➔ Bootup NumLock State [On]

Use the **Bootup NumLock State** BIOS option to specify if the number lock setting must be modified during boot up.

➔ **On** **DEFAULT** Allows the Number Lock on the keyboard to be enabled automatically when the computer system boots up. This allows the immediate use of the 10-key numeric keypad located on the right side of the keyboard. To confirm this, the Number Lock LED light on the keyboard is lit.

- **Off** — Does not enable the keyboard Number Lock automatically. To use the 10-keys on the keyboard, press the Number Lock key located on the upper left-hand corner of the 10-key pad. The Number Lock LED on the keyboard lights up when the Number Lock is engaged.

Quiet Boot [Enabled]

Use the **Quiet Boot** BIOS option to select the screen display when the system boots.

- **Disabled** — Normal POST messages displayed
- **Enabled** **DEFAULT** — OEM Logo displayed instead of POST messages

UEFI Boot [Disabled]

Use the **UEFI Boot** option to enable or disable to boot from the UEFI devices.

- **Enabled** — Boot from UEFI devices is enabled.
- **Disabled** **DEFAULT** — Boot from UEFI devices is disabled.

Launch PXE OpROM [Disabled]

Use the **Launch PXE OpROM** option to enable or disable boot option for legacy network devices.

- **Disabled** **DEFAULT** — Ignore all PXE Option ROMs
- **Enabled** — Load PXE Option ROMs.

Option ROM Messages [Force BIOS]

Use the **Option ROM Messages** option to set the Option ROM display mode.

- **Force BIOS** **DEFAULT** — Sets display mode to force BIOS.

➔ **Keep Current** Sets display mode to current.

➔ Boot Option Priority

Use the **Boot Option Priority** function to set the system boot sequence from the available devices. The drive sequence also depends on the boot sequence in the individual device section.

4.7 Exit

Use the **Exit** menu (**BIOS Menu 21**) to load default BIOS values, optimal failsafe values and to save configuration changes.

```
     Aptio Setup Utility - Copyright (C) 2016 American Megatrends, Inc.
 Main    Advanced   Chipset   Security    Boot    Save & Exit

 Save Changes and Reset                          Reset the system after
 Discard Changes and Reset                       saving the changes.

 Restore Defaults
 Save as User Defaults
 Restore User Defaults

                                                 ---------------------
                                                 ←→: Select Screen
                                                 ↑ ↓: Select Item
                                                 EnterSelect
                                                 F1   General Help
                                                 F2   Previous Values
                                                 F3    Optimized
                                                 Defaults
                                                 F4    Save
                                                 ESC   Exit
      Version 2.17.1249. Copyright (C) 2016 American Megatrends, Inc.
```

BIOS Menu 21:Exit

➔ Save Changes and Reset

Use the **Save Changes and Reset** option to save the changes made to the BIOS options and to exit the BIOS configuration setup program.

➔ Discard Changes and Reset

Use the **Discard Changes and Reset** option to exit the system without saving the changes made to the BIOS configuration setup program.

➔ Restore Defaults

Use the **Restore Defaults** option to load the optimal default values for each of the parameters on the Setup menus. **F3 key can be used for this operation.**

➔ Save as User Defaults

Use the **Save as User Defaults** option to save the changes done so far as user defaults.

➔ Restore User Defaults

Use the **Restore User Defaults** option to restore the user defaults to all the setup options.

Appendix

A

Regulatory Compliance

DECLARATION OF CONFORMITY

This equipment is in conformity with the following EU directives:

- EMC Directive (2004/108/EC, 2014/30/EU)
- Low-Voltage Directive (2006/95/EC, 2014/35/EU)
- RoHS II Directive (2011/65/EU, 2015/863/EU)

If the user modifies and/or install other devices in the equipment, the CE conformity declaration may no longer apply.

If this equipment has telecommunications functionality, it also complies with the requirements of the Radio Equipment Directive 2014/53/EU.

	English IEI Integration Corp declares that this equipment is in compliance wi the essential requirements and other relevant provisions of Directive 2014/53/EU.
	Български [Bulgarian] IEI Integration Corp. декларира, че този оборудване е в съответствие със съществените изисквания и другите приложим правила на Директива 2014/53/EU.
	Česky [Czech] IEI Integration Corp tímto prohlašuje, že tento zařízení je ve shodě s základními požadavky a dalšími příslušnými ustanoveními směrnice 2014/53/EU.
	Dansk [Danish] IEI Integration Corp erklærer herved, at følgende udstyr overholder de væsentlige krav og øvrige relevante krav i direktiv 2014/53/EU.

	Deutsch [German] IEI Integration Corp, erklärt dieses Gerät entspricht den grundlegenden Anforderungen und den weiteren entsprechenden Vorgaben der Richtlinie 2014/53/EU.
	Eesti [Estonian] IEI Integration Corp deklareerib seadme seadme vastavust direktiivi 2014/53/EÜ põhinõuetele ja nimetatud direktiivist tulenevatele teistele asjakohastele sätetele.
	Español [Spanish] IEI Integration Corp declara que el equipo cumple con los requisitos esenciales y cualesquiera otras disposiciones aplicables o exigibles de la Directiva 2014/53/EU.
	Ελληνική [Greek] IEI Integration Corp ΔΗΛΩΝΕΙ ΟΤΙ ΕΞΟΠΛΙΣΜΟΣ ΣΥΜΜΟΡΦΩΝΕΤΑΙ ΠΡΟΣ ΤΙΣ ΟΥΣΙΩΔΕΙΣ ΑΠΑΙΤΗΣΕΙΣ ΚΑΙ ΤΙΣ ΛΟΙΠΕΣ ΣΧΕΤΙΚΕΣ ΔΙΑΤΑΞΕΙΣ ΤΗΣ ΟΔΗΓΙΑΣ 2014/53/EU.
	Français [French] IEI Integration Corp déclare que l'appareil est conforme aux exigences essentielles et aux autres dispositions pertinentes de la directive 2014/53/EU.
	Italiano [Italian] IEI Integration Corp dichiara che questo apparecchio è conforme ai requisiti essenziali ed alle altre disposizioni pertinenti stabilite dalla direttiva 2014/53/EU.
	Latviski [Latvian] IEI Integration Corp deklarē, ka iekārta atbilst būtiskajām prasībām un citiem ar to saistītajiem noteikumiem Direktīvas 2014/53/EU.

	Lietuvių [Lithuanian] IEI Integration Corp deklaruoja, kad šis įranga atitinka esminius reikalavimus ir kitas 2014/53/EU Direktyvos nuostatas.
	Nederlands [Dutch] IEI Integration Corp dat het toestel toestel in overeenstemming is met de essentiële eisen en de andere relevante bepalingen van richtlijn 2014/53/EU.
	Malti [Maltese] IEI Integration Corp jiddikjara li dan prodott jikkonforma mal-ħtiġijiet essenzjali u ma provvedimenti oħrajn relevanti li hemm fid-Dirrettiva 2014/53/EU.
	Magyar [Hungarian] IEI Integration Corp nyilatkozom, hogy a berendezés megfelel a vonatkozó alapvetõ követelményeknek és az 2014/53/EU irányelv egyéb elõírásainak.
	Polski [Polish] IEI Integration Corp oświadcza, że wyrobu jest zgodny z zasadniczymi wymogami oraz pozostałymi stosownymi postanowieniami Dyrektywy 2014/53/EU.
	Português [Portuguese] IEI Integration Corp declara que este equipamento está conforme com os requisitos essenciais e outras disposições da Directiva 2014/53/EU.
	Româna [Romanian] IEI Integration Corp declară că acest echipament este in conformitate cu cerințele esențiale şi cu celelalte prevederi relevante ale Directivei 2014/53/EU.

	Slovensko [Slovenian] IEI Integration Corp izjavlja, da je ta opreme v skladu z bistvenimi zahtevami in ostalimi relevantnimi določili direktive 2014/53/EU.
	Slovensky [Slovak] IEI Integration Corp týmto vyhlasuje, že zariadenia spĺňa základné požiadavky a všetky príslušné ustanovenia Smernice 2014/53/EU.
	Suomi [Finnish] IEI Integration Corp vakuuttaa täten että laitteet on direktiivin 2014/53/EU oleellisten vaatimusten ja sitä koskevien direktiivin muiden ehtojen mukainen.
	Svenska [Swedish] IEI Integration Corp förklarar att denna utrustningstyp står I överensstämmelse med de väsentliga egenskapskrav och övriga relevanta bestämmelser som framgår av direktiv 2014/53/EU.

FCC WARNING

This equipment complies with Part 15 of the FCC Rules. Operation is subject to the following two conditions:

- This device may not cause harmful interference, and
- This device must accept any interference received, including interference that may cause undesired operation.

This equipment has been tested and found to comply with the limits for a Class A digital device, pursuant to part 15 of the FCC Rules. These limits are designed to provide reasonable protection against harmful interference when the equipment is operated in a commercial environment. This equipment generates, uses, and can radiate radio frequency energy and, if not installed and used in accordance with the instruction manual, may cause harmful interference to radio communications. Operation of this equipment in a residential area is likely to cause harmful interference in which case the user will be required to correct the interference at his own expense.

Federal Communication Commission Interference Statement

This equipment has been assembled with components that comply with the limits for a Class B digital device, pursuant to Part 15 of the FCC Rules. These limits are designed to provide reasonable protection against harmful interference in a residential installation. This equipment generates, uses and can radiate radio frequency energy and, if not installed and used in accordance with the instructions, may cause harmful interference to radio communications. However, there is no guarantee that interference will not occur in a particular installation. If this equipment does cause harmful interference to radio or television reception, which can be determined by turning the equipment off and on, the user is encouraged to try to correct the interference by one of the following measures:

- Reorient or relocate the receiving antenna.
- Increase the separation between the equipment and receiver.
- Connect the equipment into an outlet on a circuit different from that to which the receiver is connected.
- Consult the dealer or an experienced radio/TV technician for help.

Appendix

B

Safety Precautions

WARNING:

The precautions outlined in this chapter should be strictly followed. Failure to follow these precautions may result in permanent damage to the uIBX-250-BW.

B.1 Safety Precautions

Please follow the safety precautions outlined in the sections that follow:

B.1.1 General Safety Precautions

Please ensure the following safety precautions are adhered to at all times.

- ***Follow the electrostatic precautions*** outlined below whenever the device is opened.
- ***Make sure the power is turned off and the power cord is disconnected*** whenever the uIBX-250-BW is being installed, moved or modified.
- ***To prevent the risk of electric shock, make sure power cord is unplugged from wall socket.*** To fully disengage the power to the unit, please disconnect the power cord from the AC outlet. Refer servicing to qualified service personnel. The AC outlet shall be readily available and accessible.
- ***Do not apply voltage levels that exceed the specified voltage range***. Doing so may cause fire and/or an electrical shock. Use a power cord that matches the voltage of the power outlet, which has been approved and complies with the safety standard of your particular country.
- ***Electric shocks can occur*** if the uIBX-250-BW chassis is opened when it is running. To avoid risk of electric shock, this device must only be connected to a supply mains with protective earth.
- ***Do not drop or insert any objects*** into the ventilation openings of the uIBX-250-BW.

- ***If considerable amounts of dust, water, or fluids enter the* device**, turn off the power supply immediately, unplug the power cord, and contact the uIBX-250-BW vendor.
- **DO NOT**:
  - Drop the device against a hard surface.
  - Strike or exert excessive force onto the LCD panel.
  - Touch any of the LCD panels with a sharp object
  - In a site where the ambient temperature exceeds the rated temperature

B.1.2 Anti-static Precautions

WARNING:

Failure to take ESD precautions during the installation of the uIBX-250-BW may result in permanent damage to the uIBX-250-BW and severe injury to the user.

Electrostatic discharge (ESD) can cause serious damage to electronic components, including the uIBX-250-BW. Dry climates are especially susceptible to ESD. It is therefore critical that whenever the uIBX-250-BW is opened and any of the electrical components are handled, the following anti-static precautions are strictly adhered to.

- ***Wear an anti-static wristband***: Wearing a simple anti-static wristband can help to prevent ESD from damaging any electrical component.
- ***Self-grounding***: Before handling any electrical component, touch any grounded conducting material. During the time the electrical component is handled, frequently touch any conducting materials that are connected to the ground.
- ***Use an anti-static pad***: When configuring or working with an electrical component, place it on an anti-static pad. This reduces the possibility of ESD damage.
- ***Only handle the edges of the electrical component***: When handling the electrical component, hold the electrical component by its edges.

B.1.3 Product Disposal

CAUTION:

Risk of explosion if battery is replaced by an incorrect type. Only certified engineers should replace the on-board battery.

Dispose of used batteries according to instructions and local regulations.

- Outside the European Union – If you wish to dispose of used electrical and electronic products outside the European Union, please contact your local authority so as to comply with the correct disposal method.
- Within the European Union – The device that produces less waste and is easier to recycle is classified as electronic device in terms of the European Directive 2012/19/EU (WEEE), and must not be disposed of as domestic garbage.

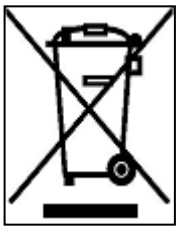

EU-wide legislation, as implemented in each Member State, requires that waste electrical and electronic products carrying the mark (left) must be disposed of separately from normal household waste. This includes monitors and electrical accessories, such as signal cables or power cords. When you need to dispose of your display products, please follow the guidance of your local authority, or ask the shop where you purchased the product. The mark on electrical and electronic products only applies to the current European Union Member States.

Please follow the national guidelines for electrical and electronic product disposal.

B.2 Maintenance and Cleaning Precautions

When maintaining or cleaning the uIBX-250-BW, please follow the guidelines below.

WARNING:

- For safety reasons, turn-off the power and unplug the panel PC before cleaning.
- If you dropped any material or liquid such as water onto the panel PC when cleaning, unplug the power cable immediately and contact your dealer or the nearest service center. Always make sure your hands are dry when unplugging the power cable.

B.2.1 Maintenance and Cleaning

Prior to cleaning any part or component of the uIBX-250-BW, please read the details below.

- Except for the LCD panel, never spray or squirt liquids directly onto any other components. To clean the LCD panel, gently wipe it with a piece of soft dry cloth or a slightly moistened cloth.
- The interior of the device does not require cleaning. Keep fluids away from the device interior.
- Be cautious of all small removable components when vacuuming the device.
- Never drop any objects or liquids through the openings of the device.
- Be cautious of any possible allergic reactions to solvents or chemicals used when cleaning the device.
- Avoid eating, drinking and smoking within vicinity of the device.

B.2.2 Cleaning Tools

Some components in the uIBX-250-BW may only be cleaned using a product specifically designed for the purpose. In such case, the product will be explicitly mentioned in the cleaning tips. Below is a list of items to use when cleaning the uIBX-250-BW.

- ***Cloth*** – Although paper towels or tissues can be used, a soft, clean piece of cloth is recommended when cleaning the device.

- ***Water or rubbing alcohol*** – A cloth moistened with water or rubbing alcohol can be used to clean the device.
- ***Using solvents*** – The use of solvents is not recommended when cleaning the device as they may damage the plastic parts.
- ***Vacuum cleaner*** – Using a vacuum specifically designed for computers is one of the best methods of cleaning the device. Dust and dirt can restrict the airflow in the device and cause its circuitry to corrode.
- ***Cotton swabs*** – Cotton swaps moistened with rubbing alcohol or water are excellent tools for wiping hard to reach areas.
- **Foam swabs** – Whenever possible, it is best to use lint free swabs such as foam swabs for cleaning.

Appendix

C

BIOS Menu Options

Below is a list of BIOS configuration options in the BIOS chapter.

Appendix

D

Terminology

AC '97	Audio Codec 97 (AC'97) refers to a codec standard developed by Intel® in 1997.
ACPI	Advanced Configuration and Power Interface (ACPI) is an OS-directed configuration, power management, and thermal management interface.
AHCI	Advanced Host Controller Interface (AHCI) is a SATA Host controller register-level interface.
ATA	The Advanced Technology Attachment (ATA) interface connects storage devices including hard disks and CD-ROM drives to a computer.
ARMD	An ATAPI Removable Media Device (ARMD) is any ATAPI device that supports removable media, besides CD and DVD drives.
ASKIR	Amplitude Shift Keyed Infrared (ASKIR) is a form of modulation that represents a digital signal by varying the amplitude ("volume") of the signal. A low amplitude signal represents a binary 0, while a high amplitude signal represents a binary 1.
BIOS	The Basic Input/Output System (BIOS) is firmware that is first run when the computer is turned on and can be configured by the end user
CODEC	The Compressor-Decompressor (CODEC) encodes and decodes digital audio data on the system.
CompactFlash®	CompactFlash® is a solid-state storage device. CompactFlash® devices use flash memory in a standard size enclosure. Type II is thicker than Type I, but a Type II slot can support both types.
CMOS	Complimentary metal-oxide-conductor is an integrated circuit used in chips like static RAM and microprocessors.
COM	COM refers to serial ports. Serial ports offer serial communication to expansion devices. The serial port on a personal computer is usually a male D-sub 9 connector.
DAC	The Digital-to-Analog Converter (DAC) converts digital signals to analog signals.
DDR	Double Data Rate refers to a data bus transferring data on both the rising and falling edges of the clock signal.

DMA	Direct Memory Access (DMA) enables some peripheral devices to bypass the system processor and communicate directly with the system memory.
DIMM	Dual Inline Memory Modules are a type of RAM that offer a 64-bit data bus and have separate electrical contacts on each side of the module.
DIO	The digital inputs and digital outputs are general control signals that control the on/off circuit of external devices or TTL devices. Data can be read or written to the selected address to enable the DIO functions.
EHCI	The Enhanced Host Controller Interface (EHCI) specification is a register-level interface description for USB 2.0 Host Controllers.
EIDE	Enhanced IDE (EIDE) is a newer IDE interface standard that has data transfer rates between 4.0 MBps and 16.6 MBps.
EIST	Enhanced Intel® SpeedStep Technology (EIST) allows users to modify the power consumption levels and processor performance through application software. The application software changes the bus-to-core frequency ratio and the processor core voltage.
FSB	The Front Side Bus (FSB) is the bi-directional communication channel between the processor and the Northbridge chipset.
GbE	Gigabit Ethernet (GbE) is an Ethernet version that transfers data at 1.0 Gbps and complies with the IEEE 802.3-2005 standard.
GPIO	General purpose input
HDD	Hard disk drive (HDD) is a type of magnetic, non-volatile computer storage device that stores digitally encoded data.
ICH	The Input/Ouput Controll Hub (ICH) is an Intel® Southbridge chipset.
IrDA	Infrared Data Association (IrDA) specify infrared data transmission protocols used to enable electronic devices to wirelessly communicate with each other.
L1 Cache	The Level 1 Cache (L1 Cache) is a small memory cache built into the system processor.
L2 Cache	The Level 2 Cache (L2 Cache) is an external processor memory cache.

LCD	Liquid crystal display (LCD) is a flat, low-power display device that consists of two polarizing plates with a liquid crystal panel in between.
LVDS	Low-voltage differential signaling (LVDS) is a dual-wire, high-speed differential electrical signaling system commonly used to connect LCD displays to a computer.
POST	The Power-on Self Test (POST) is the pre-boot actions the system performs when the system is turned-on.
RAM	Random Access Memory (RAM) is volatile memory that loses data when power is lost. RAM has very fast data transfer rates compared to other storage like hard drives.
SATA	Serial ATA (SATA) is a serial communications bus designed for data transfers between storage devices and the computer chipsets. The SATA bus has transfer speeds up to 1.5 Gbps and the SATA II bus has data transfer speeds of up to 3.0 Gbps.
S.M.A.R.T	Self Monitoring Analysis and Reporting Technology (S.M.A.R.T) refers to automatic status checking technology implemented on hard disk drives.
UART	Universal Asynchronous Receiver-transmitter (UART) is responsible for asynchronous communications on the system and manages the system's serial communication (COM) ports.
UHCI	The Universal Host Controller Interface (UHCI) specification is a register-level interface description for USB 1.1 Host Controllers.
USB	The Universal Serial Bus (USB) is an external bus standard for interfacing devices. USB 1.1 supports 12Mbps data transfer rates and USB 2.0 supports 480Mbps data transfer rates.
VGA	The Video Graphics Array (VGA) is a graphics display system developed by IBM.

Appendix

E

Hazardous Materials Disclosure

The details provided in this appendix are to ensure that the product is compliant with the Peoples Republic of China (China) RoHS standards. The table below acknowledges the presences of small quantities of certain materials in the product, and is applicable to China RoHS only.

A label will be placed on each product to indicate the estimated "Environmentally Friendly Use Period" (EFUP). This is an estimate of the number of years that these substances would "not leak out or undergo abrupt change." This product may contain replaceable sub-assemblies/components which have a shorter EFUP such as batteries and lamps. These components will be separately marked.

Please refer to the following table.

Part Name	Toxic or Hazardous Substances and Elements					
	Lead (Pb)	Mercury (Hg)	Cadmium (Cd)	Hexavalent Chromium (CR(VI))	Polybrominated Biphenyls (PBB)	Polybrominated Diphenyl Ethers (PBDE)
Housing	O	O	O	O	O	O
Display	O	O	O	O	O	O
Printed Circuit Board	O	O	O	O	O	O
Metal Fasteners	O	O	O	O	O	O
Cable Assembly	O	O	O	O	O	O
Fan Assembly	O	O	O	O	O	O
Power Supply Assemblies	O	O	O	O	O	O
Battery	O	O	O	O	O	O

O: This toxic or hazardous substance is contained in all of the homogeneous materials for the part is below the limit requirement in SJ/T11363-2006 (now replaced by GB/T 26572-2011).

X: This toxic or hazardous substance is contained in at least one of the homogeneous materials for this part is above the limit requirement in SJ/T11363-2006 (now replaced by GB/T 26572-2011).

此附件旨在确保本产品符合中国 RoHS 标准。以下表格标示此产品中某有毒物质的含量符合中国 RoHS 标准规定的限量要求。

本产品上会附有"环境友好使用期限"的标签，此期限是估算这些物质"不会有泄漏或突变"的年限。本产品可能包含有较短的环境友好使用期限的可替换元件，像是电池或灯管，这些元件将会单独标示出来。

部件名称	有毒有害物质或元素					
	铅 (Pb)	汞 (Hg)	镉 (Cd)	六价铬 (CR(VI))	多溴联苯 (PBB)	多溴二苯醚 (PBDE)
壳体	O	O	O	O	O	O
显示	O	O	O	O	O	O
印刷电路板	O	O	O	O	O	O
金属螺帽	O	O	O	O	O	O
电缆组装	O	O	O	O	O	O
风扇组装	O	O	O	O	O	O
电力供应组装	O	O	O	O	O	O
电池	O	O	O	O	O	O

O: 表示该有毒有害物质在该部件所有物质材料中的含量均在 SJ/T 11363-2006 (现由 GB/T 26572-2011 取代) 标准规定的限量要求以下。

X: 表示该有毒有害物质至少在该部件的某一均质材料中的含量超出 SJ/T 11363-2006 (现由 GB/T 26572-2011 取代) 标准规定的限量要求。