CLK-A17SX035-DR-A1-SP

17" SXGA LED LCD Panel w/ 5-wire Resistive Touch Kit &

A/D Board Kit(VGA/DVI) + VGA Cable

Content:

Appendix A: Specification of TFT G170EG01 V1

Appendix B: Specification of Touch 10170001 V0

Appendix C: Specification of Touch Controller Board CAB-MB-MER4050UEBG-02

Appendix D: Specification of A/D Board Kit CAB-F2281L-01 (VGA/DVI)

Appendix E: Drawing of VGA Cable

Specification

Of

TFT G170EG01 V1

☐ **Preliminary Specification**
■ **Final Specification**

Module	17.0” SXGA Color TFT-LCD
Model Name	G170EG01 V1

Customer	**Date**	**Checked & Approved by**	**Date**
_____	_____	***Vito Huang***	2013/06/24
Approved by		**Prepared by**	
		Elsie Kuo	2013/06/24
Note: This Specification is subject to change without notice.		Desktop Display Business Group / AU Optronics corporation	

Contents

1. Handling Precautions **5**
2. General Description **6**
2.1 Display Characteristics 6
2.2 Optical Characteristics 7
3. Functional Block Diagram **11**
4. Absolute Maximum Ratings **12**
4.1 TFT LCD Module 12
4.2 Backlight Unit 12
4.3 Absolute Ratings of Environment 12
5. Electrical characteristics **13**
5.1 TFT LCD Module 13
5.2 Backlight Unit 15
6. Signal Characteristic **16**
6.1 Pixel Format Image 16
6.2 The Input Data Format 16
6.3 Signal Description 17
6.4 Timing Characteristics 19
6.5 Power ON/OFF Sequence 21
7. Connector & Pin Assignment **22**
7.1 TFT LCD Module 22
7.2 Backlight Unit 23
8. Reliability Test **24**
9. Label and Packaging **25**
9.1 Shipping Label (on the rear side of TFT-LCD display) 25
9.2 Carton Package 25
10. Mechanical Characteristics **27**

Record of Revision

Version and Date	Page	Old description	New Description	Remark
0.1 2011/01/12	All	First Edition for Customer	All	
0.2 2011/01/14	5	350 (center,Typ)@7.5 mA	350	
	24	Items: Temperature Humidity Bias (THB); Required Condition: Ta= 50℃, 90%RH, 300hours	Items: Temperature Humidity Bias (THB); Required Condition: Ta= 50℃, 80%RH, 300hours	
0.3 2011/01/24	11	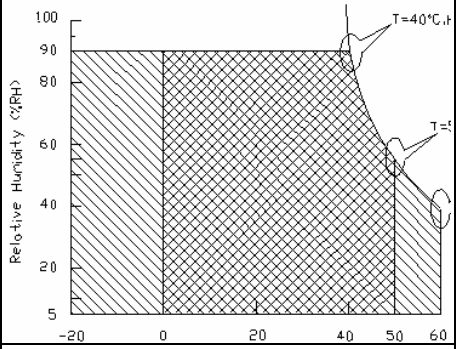	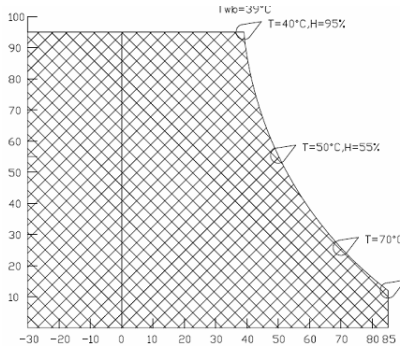	
	26	Thickness= 15.8 mm	Thickness= 18.0 mm	
0.4 2011/04/06	5, 6	Optical ResponseTime= 5 ms	Optical ResponseTime= 30 ms	
	5	This module does not contain an inverter card for backlight.	This module embbededs an LED driver on it.	
	5	Weight: 1800 (g) Typ.	Weight: 1350 (g) Typ.	
	11	4.2 Backlight Unit: Item: LED Current; Symbol: ICFL; Min.: -; Max.: 110; Unit: [mA] rms; Conditions: Note 1,2	4.2 Backlight Unit: Item: LED Forward Current; Symbol: I_F; Min.: -; Max.: 120; Unit: [mA]; Conditions: Note 1,2	
	23	No pins drawing of LED driver board	New add pins drawing	
1.0 2011/09/30	6	Without RGB color coordinate	Red x: 0.598, 0.648, 0.698 Red y: 0.289, 0.339, 0.389 Green x: 0.273, 0.323, 0.373 Green y: 0.563, 0.613, 0.663 Blue x: 0.093, 0.143, 0.193 Blue y: 0.020, 0.070, 0.120	
	6	Contrast Ratio: -, -, 600, 1000, -, 4	Contrast Ratio: -, -, 600, 800, -, 4	
	24	Without EMI item is RA list	EMI: 30-230 MHz, limit 40 dBu V/m, 230-1000 MHz, limit 47 dBu V/m	
	25	Outside dimension of carton:434(L)mm*278(W)mm*390(H)mm	Outside dimension of carton:426(L)mm*270(W)mm*375(H)mm	
1.1 2012/02/01	5	Operation temperature -30 to +85	Operation temperature -30 to +70	
1.2 2012/05/25	6	No Color Gamut spec	Add Color Gamut 72%	
1.3 2012/07/12		Change View Angle Spec & Delete	Change View Angle spec(CR=10) & Delete	

		View Angle spec(CR=5)	View Angle spec(CR=5) Typ. From L85/R85/U80/D80 to L80/R80/U60/D80 Min From L70/R70/U70/D70 to L70/R70/U50/D70	
1.4 2013/6/24	6	Operation temperature -30 to +70	Operation temperature -30 to +85	
	25	**9.2 Carton Package** Max capacity : 8 TFT-LCD module per carton Max weight: 14 kg per carton Outside dimension of carton:426(L)mm*270(W)mm*375(H)mm	**9.2 Carton Package** Max capacity : 8 TFT-LCD module per carton Max weight: 18 kg per carton Outside dimension of carton:434(L)mm*278(W)mm*391(H)mm	
	26	No palletizing info	Add palletizing info	

1. Handling Precautions

1) Since front polarizer is easily damaged, pay attention not to scratch it.
2) Be sure to turn off power supply when inserting or disconnecting from input connector.
3) Wipe off water drop immediately. Long contact with water may cause discoloration or spots.
4) When the panel surface is soiled, wipe it with absorbent cotton or other soft cloth.
5) Since the panel is made of glass, it may break or crack if dropped or bumped on hard surface.
6) Since CMOS LSI is used in this module, take care of static electricity and insure human earth when handling.
7) Do not open or modify the Module Assembly.
8) Do not press the reflector sheet at the back of the module to any directions.
9) In case if a Module has to be put back into the packing container slot after once it was taken out from the container, do not press the center of the LED light bar edge. Instead, press at the far ends of the LED light bar edge softly. Otherwise the TFT Module may be damaged.
10) At the insertion or removal of the Signal Interface Connector, be sure not to rotate nor tilt the Interface Connector of the TFT Module.
11) After installation of the TFT Module into an enclosure, do not twist nor bend the TFT Module even momentary. At designing the enclosure, it should be taken into consideration that no bending/twisting forces are applied to the TFT Module from outside. Otherwise the TFT Module may be damaged.
12) Small amount of materials having no flammability grade is used in the LCD module. The LCD module should be supplied by power complied with requirements of Limited Power Source (IEC60950 or UL1950), or be applied exemption.

2. General Description

This specification applies to the 17 inch Color TFT-LCD Module G170EG01 V1.

The display supports the SXGA+ (1280(H) x 1024(V)) screen format and 16.7M colors (RGB 6-bits+Hi-FRC data).All input signals are 2 Channel LVDS interface compatible.

This module embbededs an LED driver on it.

2.1 Display Characteristics

The following items are characteristics summary on the table under 25 □ condition:

Items	Unit	Specifications
Screen Diagonal	[mm]	432 (17.0”)
Active Area	[mm]	337.920(H) × 270.336(V)
Pixels H x V		1280 × 3(RGB) × 1024
Pixel Pitch	[mm]	0.264(per one triad) × 0.264
Pixel Arrangement		R.G.B. Vertical Stripe
Display Mode		Normally White
White Luminance	[cd/m^2]	350
Contrast Ratio		800 : 1 (Typ)
Optical ResponseTime	[msec]	30 (Typ)
Nominal Input Voltage VDD	[Volt]	+5.0 (Typ)
Power Consumption (VDD line + LED line)	[Watt]	22 W (Typ.) (with LED driver, all black pattern)
Weight	[Grams]	1350 Typ.
Physical Size (H x V x D)	[mm]	358.5(H) x 296.5(V) Typ. x 18.0(D) Max
Electrical Interface		Dual Channel LVDS
Surface Treatment		Anti-glare type, Hardness 3H
Support Color		16.7M colors (RGB 6-bits +Hi-FRC data)
Temperature Range Operating Storage (Non-Operating)	 [^{o}C] [^{o}C]	 -30 to +85 -30 to +85
RoHS Compliance		RoHS Compliance

2.2 Optical Characteristics

The optical characteristics are measured under stable conditions at 25□ (Room Temperature):

Item	Unit	Conditions	Min.	Typ.	Max.	Note
Viewing Angle	[degree]	Horizontal (Right) CR = 10 (Left)	70 70	80 80	-	1
		Vertical (Up) CR = 10 (Down)	50 70	60 80	-	
Luminance Uniformity	[%]	9 Points	75	80	-	2, 3
Optical Response Time	[msec]	Rising	-	20	25	4, 6
		Falling	-	10	15	
		Rising + Falling	-	30	40	
Color / Chromaticity Coordinates (CIE 1931)		Red x Red y	0.598 0.289	0.648 0.339	0.698 0.389	4
		Green x Green y	0.273 0.563	0.323 0.613	0.373 0.663	
		Blue x Blue y	0.093 0.020	0.143 0.070	0.193 0.120	
		White x White y	0.263 0.279	0.313 0.329	0.363 0.379	
White Luminance (At LED= 110mA)	[cd/m^2]		280	350	-	4
Contrast Ratio			600	800	-	4
Cross Talk (At 75Hz)	[%]		-	-	1.5	5
Flicker	[dB]		-	-	-20	7
Color Gamut	[%]			72		

Optical Equipment: BM-5A, BM-7, PR880, or equivalent

Note 1: Definition of viewing angle

Viewing angle is the measurement of contrast ratio □10, at the screen center, over a 180° horizontal and 180° vertical range (off-normal viewing angles). The 180° viewing angle range is broken down as follows; 90° (θ) horizontal left and right and 90° (Φ) vertical, high (up) and low (down). The measurement direction is typically perpendicular to the display surface with the screen rotated about its center to develop the desired measurement viewing angle.

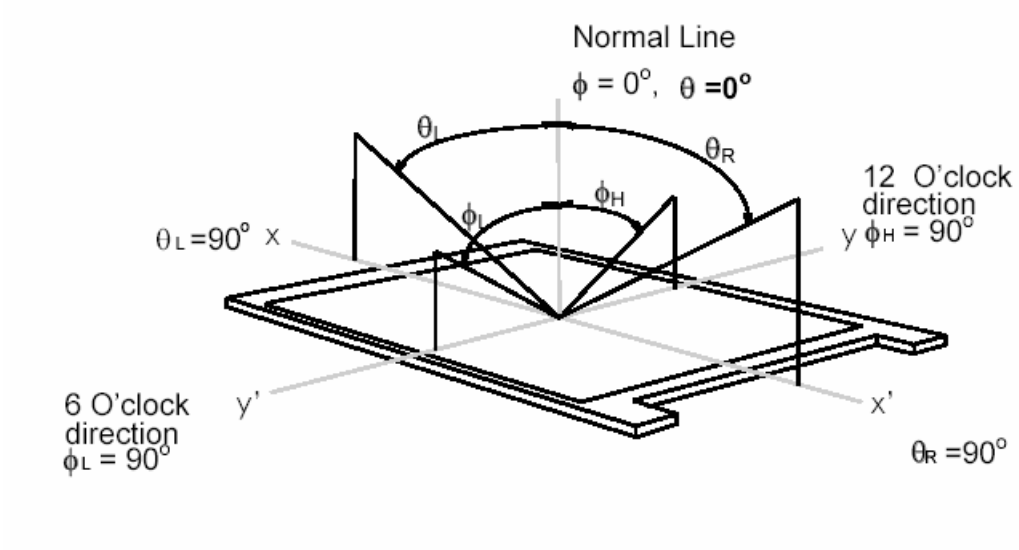

Note 2: 9 points position

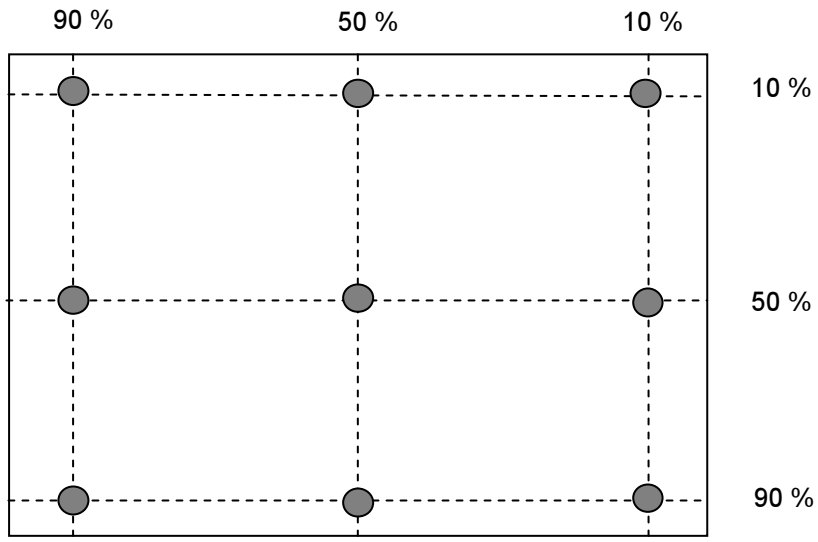

Note 3: The luminance uniformity of 9 points is defined by dividing the maximum luminance values by the minimum test point luminance

$$\delta_{W9} = \frac{\text{Minimum Luminance of 9 points}}{\text{Maximum Luminance of 9 points}}$$

Note 4: Measurement method

The LCD module should be stabilized at given temperature for 30 minutes to avoid abrupt temperature change during measuring. In order to stabilize the luminance, the measurement should be executed after lighting Backlight for 30 minutes in a stable, windless and dark room.

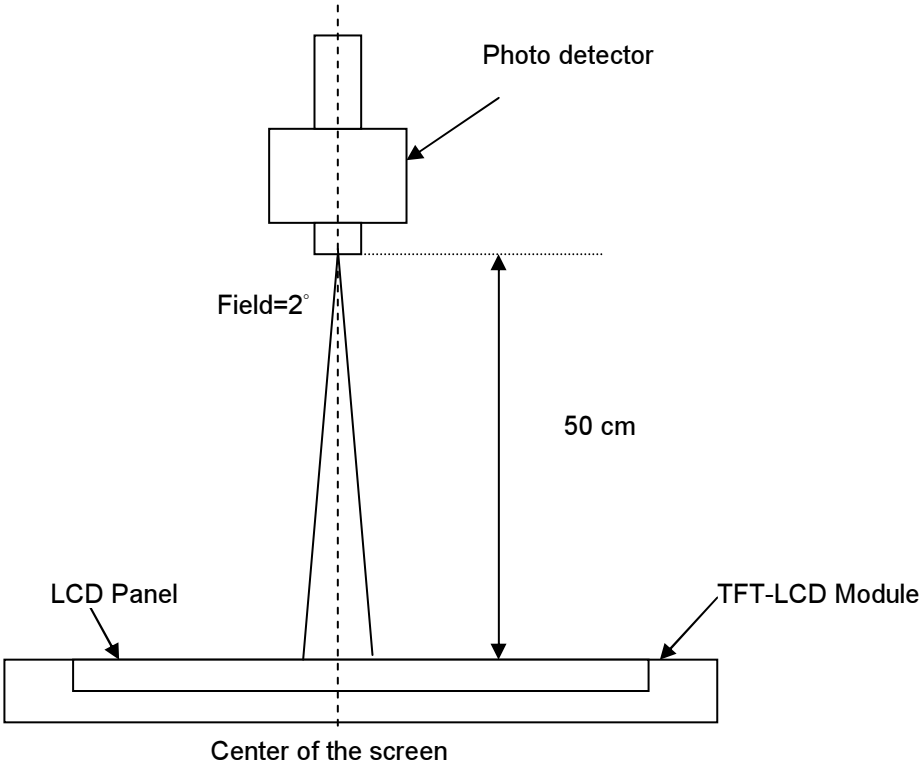

Note 5: Definition of Cross Talk (CT)

CT = | YB – YA | / YA × 100 (%)

Where

YA = Luminance of measured location without gray level 0 pattern (cd/m2)

YB = Luminance of measured location with gray level 0 pattern (cd/m2)

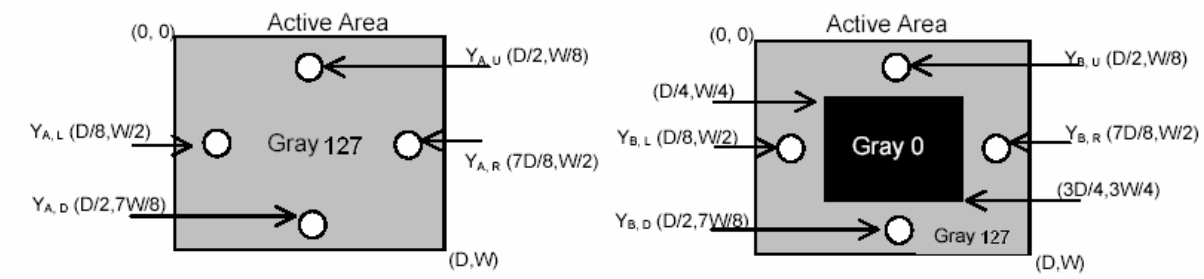

Note 6: Definition of response time:

The output signals of photo detector are measured when the input signals are changed from “Full Black” to “Full White” (rising time), and from “Full White” to “Full Black ”(falling time), respectively. The response time is interval between the 10% and 90% of amplitudes. Please refer to the figure as below.

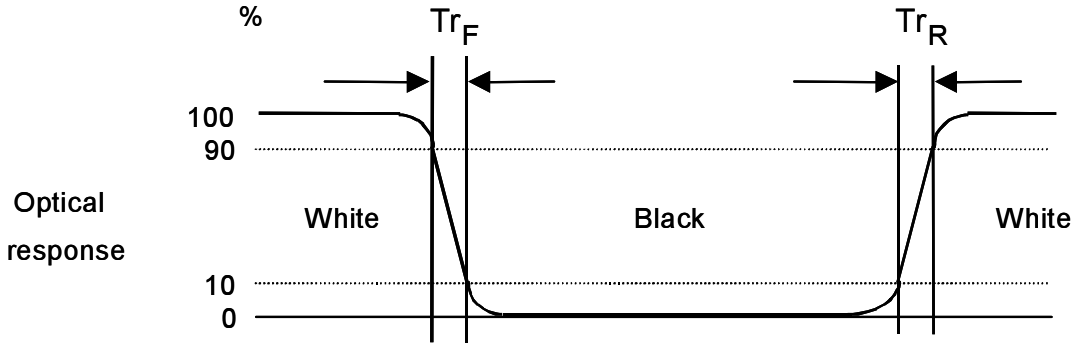

Note 7: Subchecker Pattern

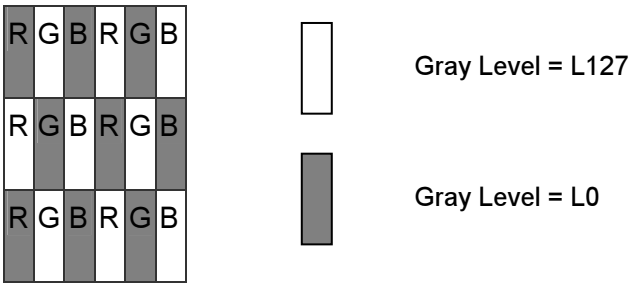

Method: Record dBV & DC value with (WESTAR)TRD-100

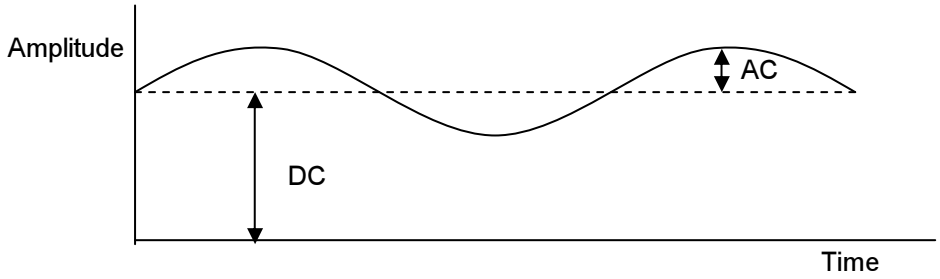

$$\text{Flicker (dB)} = 20\log\frac{\text{AC Level(at 30 Hz)}}{\text{DC Level}}$$

3. Functional Block Diagram

The following diagram shows the functional block of the 17.0 inches Color TFT-LCD Module:

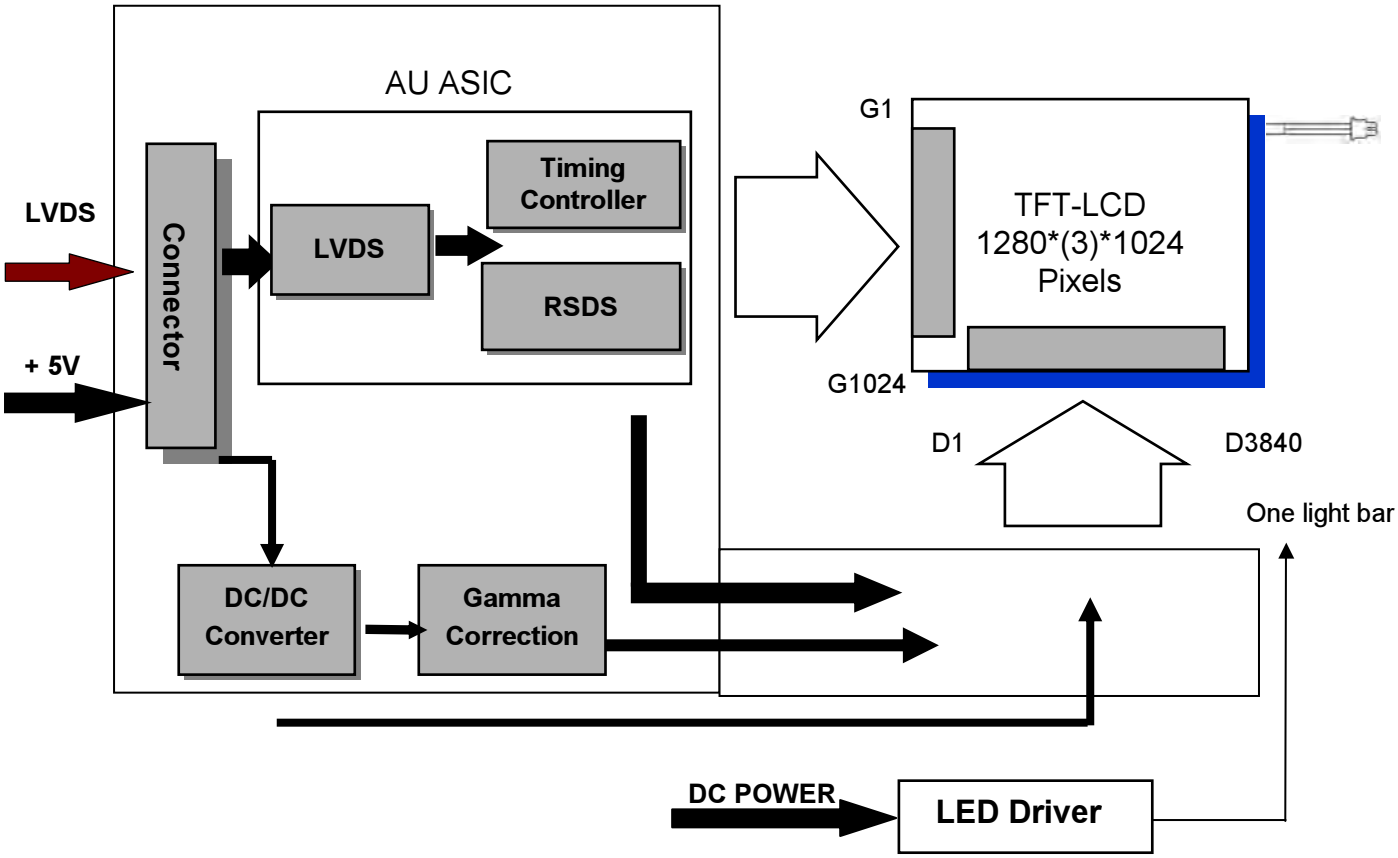

PCBA Connector:

JAE FI-XB30SSL-HF15
Or Compatible

LED Driver Connector:

3806K-F06Y-03R
Or Compatible

4. Absolute Maximum Ratings

Absolute maximum ratings of the module is as following:

4.1 TFT LCD Module

Item	Symbol	Min	Max	Unit	Conditions
Logic/LCD Drive Voltage	VIN	-0.3	6	[Volt]	***Note 1,2***

4.2 Backlight Unit

Item	Symbol	Min	Max	Unit	Conditions
LED Forward Current	I_F	-	120	[mA]	***Note 1,2***

4.3 Absolute Ratings of Environment

Item	Symbol	Min	Max	Unit	Conditions
Operating Temperature	TOP	-30	+85	[°C]	***Note 3***
Operation Humidity	HOP	8	90	[%RH]	
Storage Temperature	TST	-30	+85	[°C]	
Storage Humidity	HST	8	90	[%RH]	

Note 1: With in Ta (25□)

Note 2: Permanent damage to the device may occur if exceed maximum values

Note 3: For quality performance, please refer to AUO IIS (Incoming Inspection Standard).

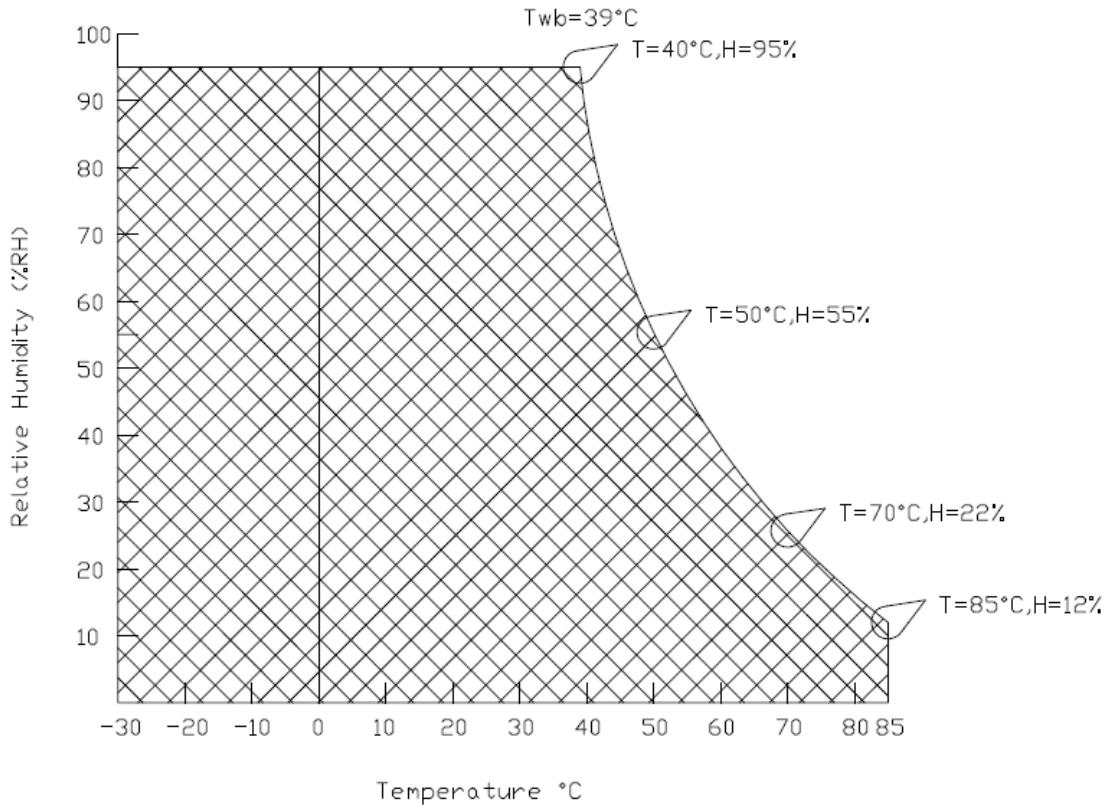

5. Electrical characteristics

5.1 TFT LCD Module

5.1.1 Power Specification

Input power specifications are as follows:

Symble	Parameter	Min.	Typ.	Max.	Unit	Condition
VCC	Logic/LCD Drive Voltage	4.5	5.0	5.5	[Volt]	±10%
ICC	Input Current	-	1.05	1.16	[A]	Vin=5V , All Black Pattern, at 75Hz
IRush	Inrush Current	-	-	3.0	[A]	Note
PCC	VCCPower	-	5.25	5.8	[Watt]	Vin=5V , All Black Pattern, at 75Hz
VCCrp	Allowable Logic/LCD Drive Ripple Voltage	-	-	200	[mV] p-p	With panel loading

Note: Measurement conditions:

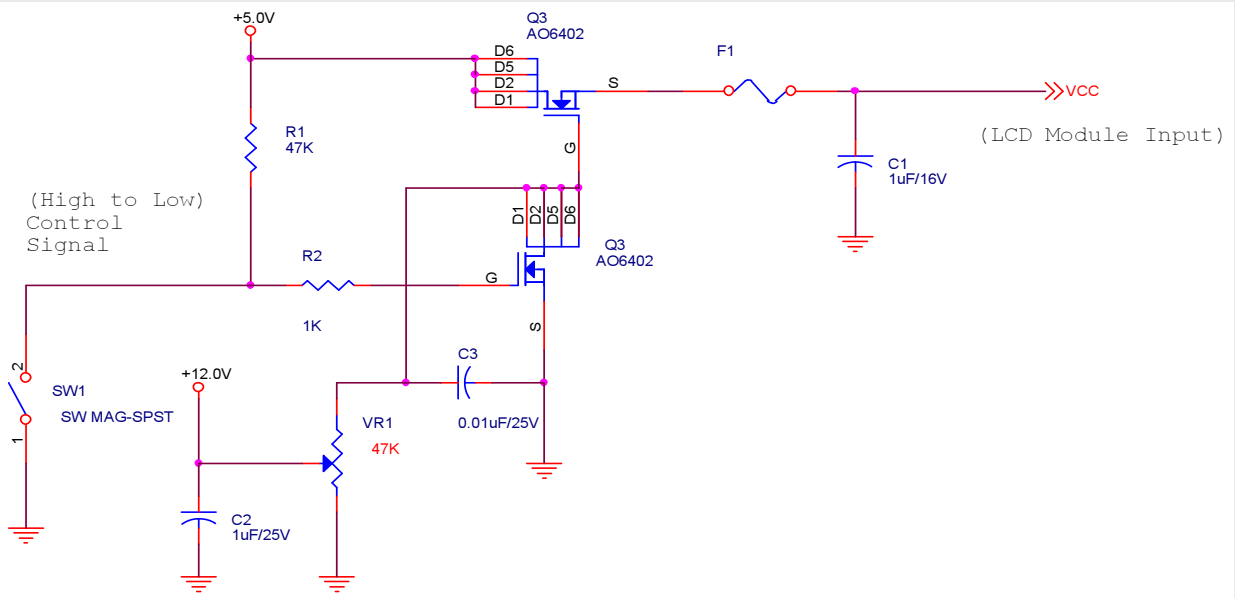

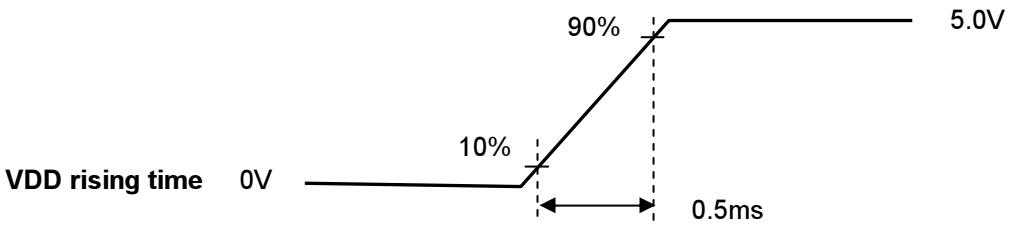

5.1.2 Signal Electrical Characteristics

Input signals shall be low or Hi-Z state when Vin is off
It is recommended to refer the specifications of SN75LVDS82DGG (Texas Instruments) in detail.

Each signal characteristics are as follows;

Symbol	Parameter	Min	Typ	Max	Units	Condition
VTH	Differential Input High Threshold	-	-	+100	[mV]	VICM = 1.2V ***Note***
VTL	Differential Input Low Threshold	-100	-	-	[mV]	VICM = 1.2V ***Note***
|VID|	Input Differential Voltage	100	400	600	[mV]	***Note***
VICM	Differential Input Common Mode Voltage	+1.0	+1.2	+1.5	[V]	VTH/VTL = ±100MV ***Note***

Note: LVDS Signal Waveform

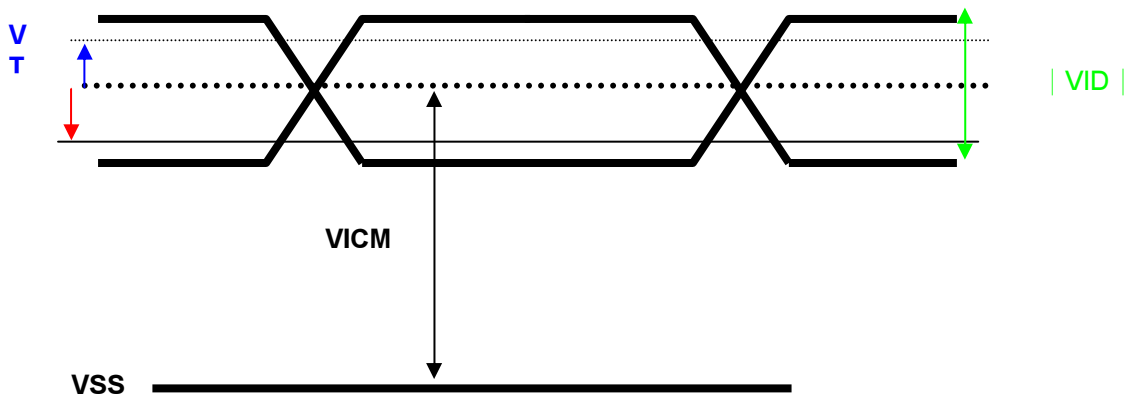

5.2 Backlight Unit

Parameter guideline LED

Following characteristics are measured under stable condition at 25℃ (Room Temperature)

Symbol	Parameter	Min.	Typ.	Max.	Unit	Remark
V_{LED}	Input Voltage	10.8	12	12.6	Volt	
I_{LED}	Input Current	-	1.18	-	A	100% Dimming
P_{LED}	Power Consumption	-	14.16	-	Watt	100% Dimming
$I_{INRUSH\ LED}$	Inrush Current	-	-	5.1	A	V_{LED} rising time ~ 470us
F_{PWM}	PWM Dimming Frequency	200	-	20K	Hz	Note 1,2
$V_{PWM\ DIM}$	Swing Voltage High	4.5	5.0	5.5	Volt	
	Swing Voltage Low	-	-	0.8	Volt	
D_{PWM}	Dimming Duty Cycle	10	-	100	%	
I_F	LED Forward Current	-	110	-	mA	Ta = 25℃
$V_{LED\ ON/OFF}$	On Control Voltage	3.0	3.3	5.5	Volt	Note 3, 4
	Off Control Voltage	-	-	0.8	Volt	
Operating Life		50000	-	-	Hrs	Note 5, 6

Note 1: PWM dimming function can be operated by PWM signal. PWM duty cycle can adjust white Luminance. (PWM High: ON and PWM Low: OFF)

Note 2: PWM signal can not be floating and pull-down to ground when waiting.

Note 3: Enable ($V_{LED\ On/Off}$) must be turned on late than V_{LED} and PWM Signal.

Note 4: Enable ($V_{LED\ On/Off}$) must be turned off early than V_{LED} and PWM Signal.

Note 5: If G170EG01 V1 module is driven by high current or at high ambient temperature & humidity condition. The operating life will be reduced.

Note 6: Operating life means brightness goes down to 50% initial brightness. Minimum operating life time is estimated data.

6. Signal Characteristic

6.1 Pixel Format Image

Following figure shows the relationship of the input signals and LCD pixel format.

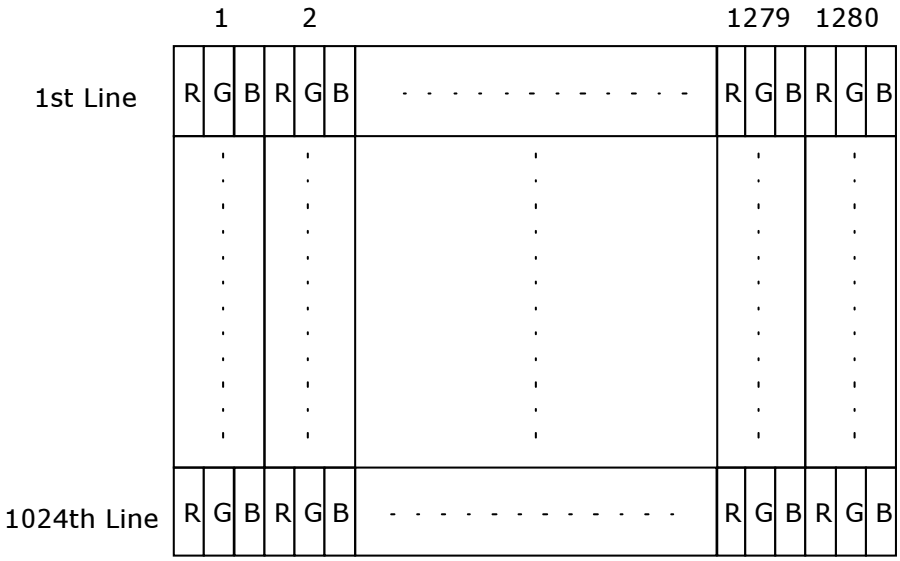

6.2 The Input Data Format

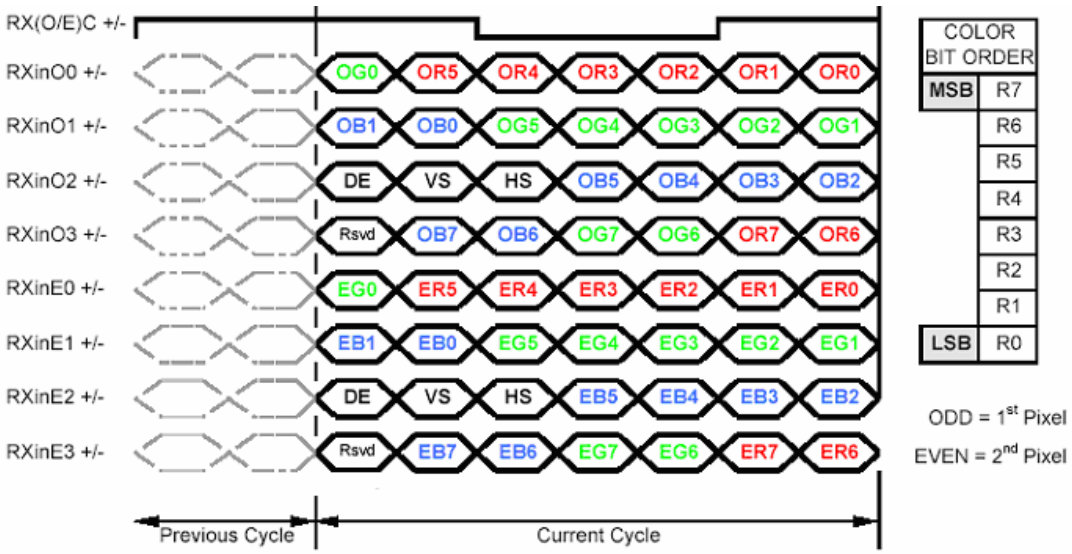

Note1: Normally, DE, VS, HS on EVEN channel are not used.
Note2: Please follow PSWG.
Note3: 8-bit in

6.3 Signal Description

The module using a pair of LVDS receiver SN75LVDS82(Texas Instruments) or compatible. LVDS is a differential signal technology for LCD interface and high speed data transfer device. Transmitter shall be SN75LVDS83(negative edge sampling) or compatible. The first LVDS port(RxOxxx) transmits odd pixels while the second LVDS port(RxExxx) transmits even pixels.

PIN #	SIGNAL NAME	DESCRIPTION
1	RxO0-	Negative LVDS differential data input (Odd data)
2	RxO0+	Positive LVDS differential data input (Odd data)
3	RxO1-	Negative LVDS differential data input (Odd data)
4	RxO1+	Positive LVDS differential data input (Odd data)
5	RxO2-	Negative LVDS differential data input (Odd data, H-Sync,V-Sync,DSPTMG)
6	RxO2+	Positive LVDS differential data input (Odd data, H-Sync,V-Sync,DSPTMG)
7	GND	Power Ground
8	RxOC-	Negative LVDS differential clock input (Odd clock)
9	RxOC+	Positive LVDS differential clock input (Odd clock)
10	RxO3-	Negative LVDS differential data input (Odd data)
11	RxO3+	Positive LVDS differential data input (Odd data)
12	RxE0-	Negative LVDS differential data input (Even data)
13	RxE0+	Positive LVDS differential data input (Even data)
14	GND	Power Ground
15	RxE1-	Negative LVDS differential data input (Even data)
16	RxE1+	Positive LVDS differential data input (Even data)
17	GND	Power Ground
18	RxE2-	Negative LVDS differential data input (Even data)
19	RxE2+	Positive LVDS differential data input (Even data)
20	RxEC-	Negative LVDS differential clock input (Even clock)
21	RxEC+	Positive LVDS differential clock input (Even clock)
22	RxE3-	Negative LVDS differential data input (Even data)
23	RxE3+	Positive LVDS differential data input (Even data)
24	GND	Power Ground
25	GND	Power Ground (For AUO test Aging+HVS mode)
26	NC	No contact
27	GND	Power Ground
28	VCC	+5.0V Power Supply
29	VCC	+5.0V Power Supply
30	VCC	+5.0V Power Supply

Note1: Start from left side

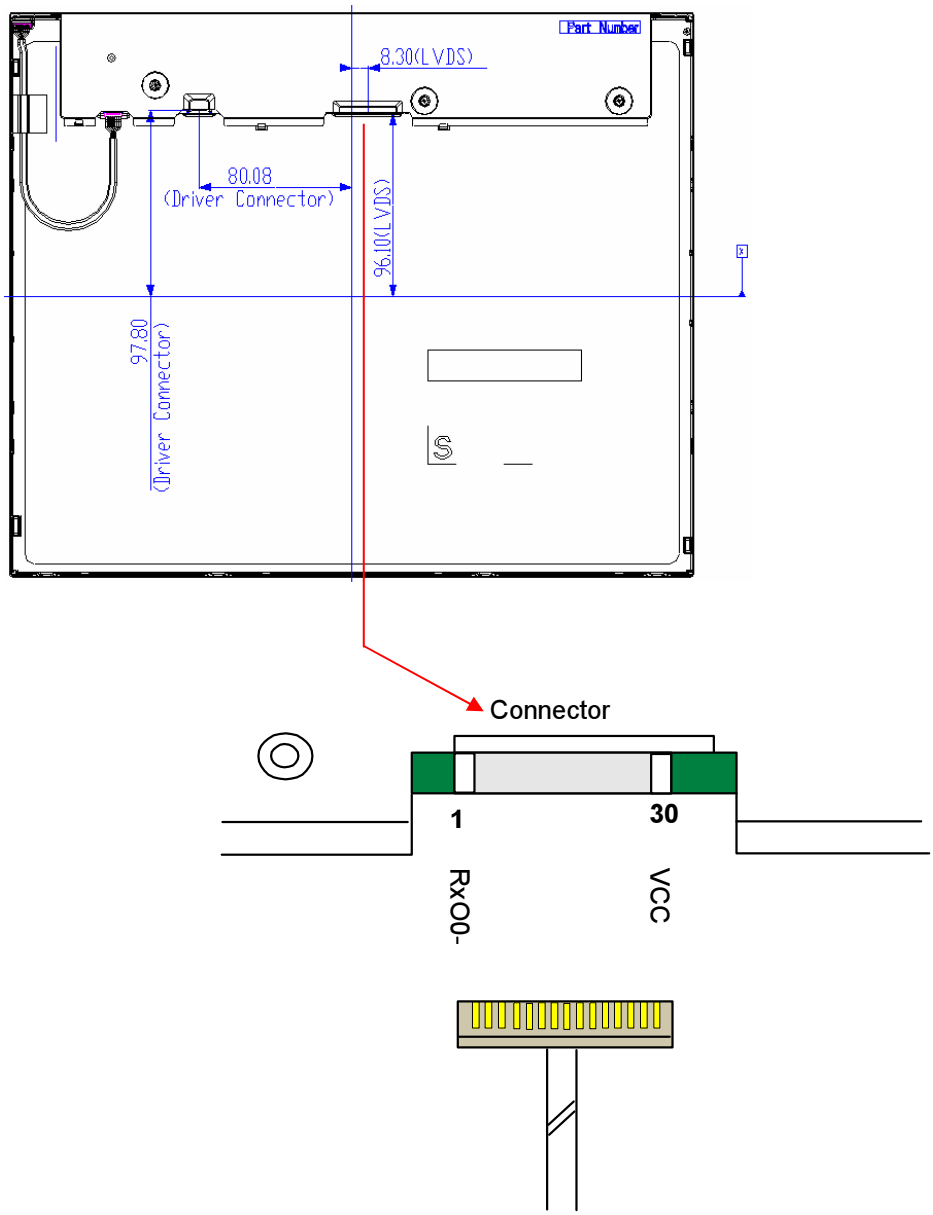

Note2: Input signals of odd and even clock shall be the same timing.

Note3: Please follow PSWG.

6.4 Timing Characteristics

6.4.1 Timing Characteristics

Basically, interface timings described here is not actual input timing of LCD module but output timing of SN75LVDS82DGG (Texas Instruments) or equivalent.

Signal	Item	Symbol	Min	Typ	Max	Unit
Vertical Section	Period	Tv	1034	1066	2048	Th
	Active	Tdisp(v)	1024	1024	1024	Th
	Blanking	Tbp(v)+Tfp(v)+PWvs	10	42	1024	Th
Horizontal Section	Period	Th	750	844	2048	Tclk
	Active	Tdisp(h)	640	640	640	Tclk
	Blanking	Tbp(h)+Tfp(h)+PWhs	110	204	1408	Tclk
Clock	Period	Tclk	14.81	18.52	25	ns
	Frequency	Freq	40	54	70	MHz
Frame rate	Frame rate	F	49	60	76	Hz

Note : DE mode only

6.4.2 Timing Diagram

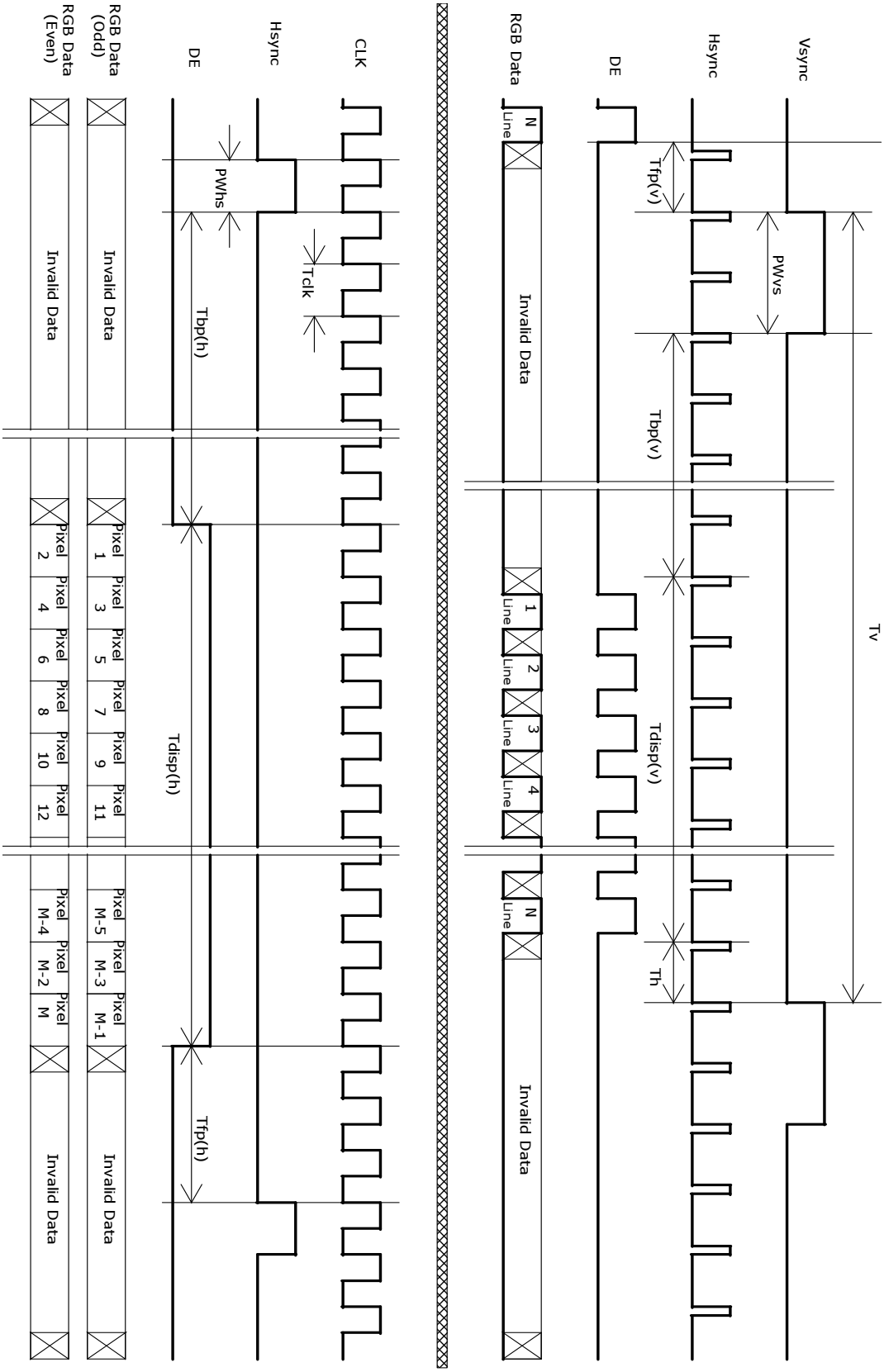

6.5 Power ON/OFF Sequence

VDD power and lamp on/off sequence is as follows. Interface signals are also shown in the chart. Signals from any system shall be Hi-Z state or low level when VDD is off.

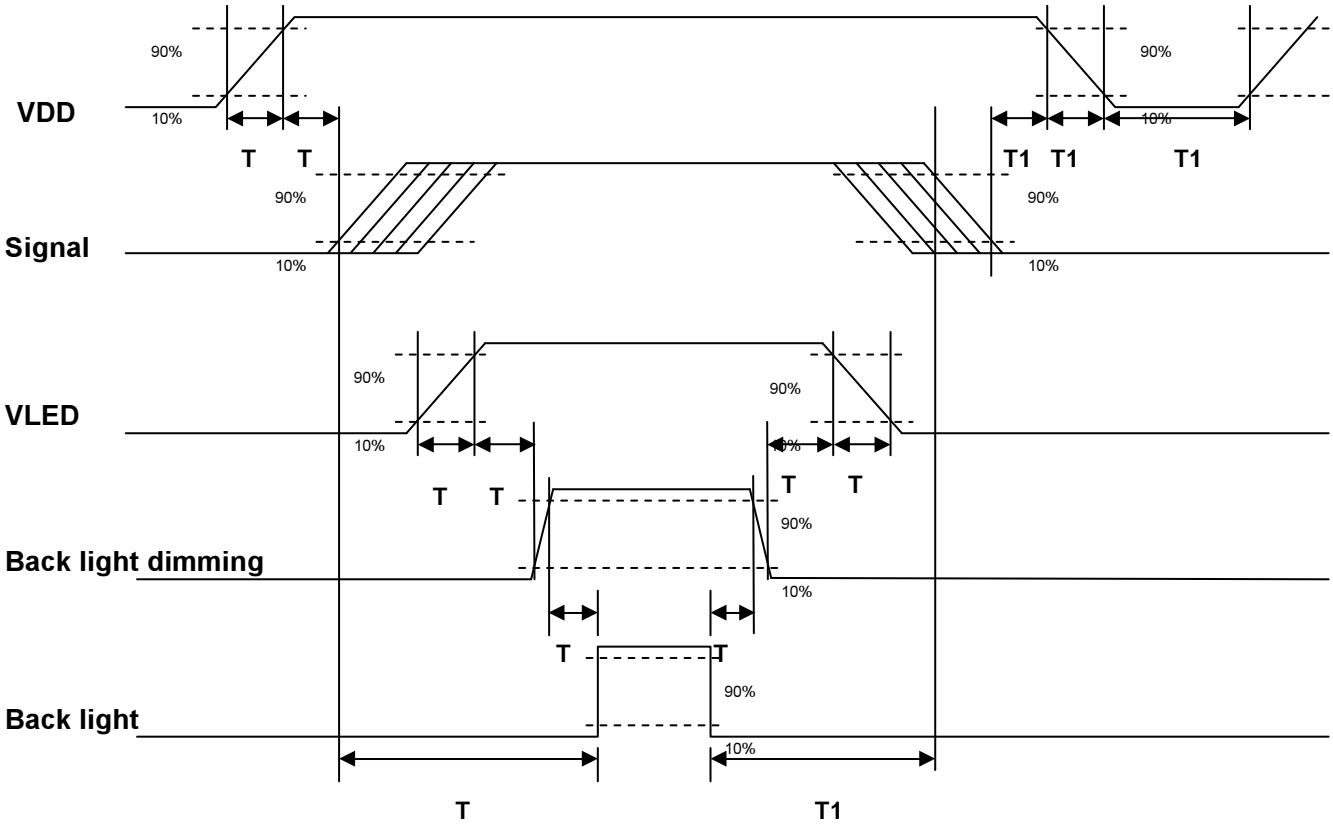

Power Sequence Timing

Parameter	Value			Unit
	Min.	Typ.	Max.	
T1	0.5	-	10	[ms]
T2	30	40	50	[ms]
T3	200	-	-	[ms]
T4	0.5	-	10	[ms]
T5	10	-	-	[ms]
T6	10	-	-	[ms]
T7	0	-	-	[ms]
T8	10	-	-	[ms]
T9	-	-	10	[ms]
T10	110	-	-	[ms]
T11	0	16	50	[ms]
T12	-	-	10	[ms]
T13	1000	-	-	[ms]

7. Connector & Pin Assignment

Physical interface is described as for the connector on module.These connectors are capable of accommodating the following signals and will be following components.

7.1 TFT LCD Module

7.1.1 Connector

Connector Name / Designation	Interface Connector
Manufacturer	JAE or Compatible
Type Part Number	FI-XB30SSL-HF15 or Compatible
Mating Housing Part Number	JAE FI-X30HL or Compatible

7.1.2 Pin Assignment

Pin#	Signal Name	Pin#	Signal Name
1	RxOIN0-	2	RxOIN0+
3	RxOIN1-	4	RxOIN1+
5	RxOIN2-	6	RxOIN2+
7	GND	8	RxOCLKIN-
9	RxOCLKIN+	10	RxOIN3-
11	RxOIN3+	12	RxEIN0-
13	RxEIN0+	14	GND
15	RxEIN1-	16	RxEIN1+
17	GND	18	RxEIN2-
19	RxEIN2+	20	RxECLKIN-
21	RxECLKIN+	22	RxEIN3-
23	RxEIN3+	24	GND
25	GND (AGMODE+HVS)	26	NC
27	GND	28	VCC
29	VCC	30	VCC

7.2 Backlight Unit

Physical interface is described as for the connector on module. These connectors are capable of accommodating the following signals and will be following components.

Connector Name / Designation	Lamp Connector
Manufacturer	E&T or compatible
Connector Model Number	3806K-F06Y-03R or compatible
Mating Connector Model Number	H208K-P06N-02B or compatible

7.2.1 Signal for LED driver connector

Pin#	Symbol	Signal Name
1	VCC	12V
2	VCC	12V
3	GND	GND
4	GND	GND
5	Display on	5V-On / 0V-Off
6	Dimming	PWM Dimming

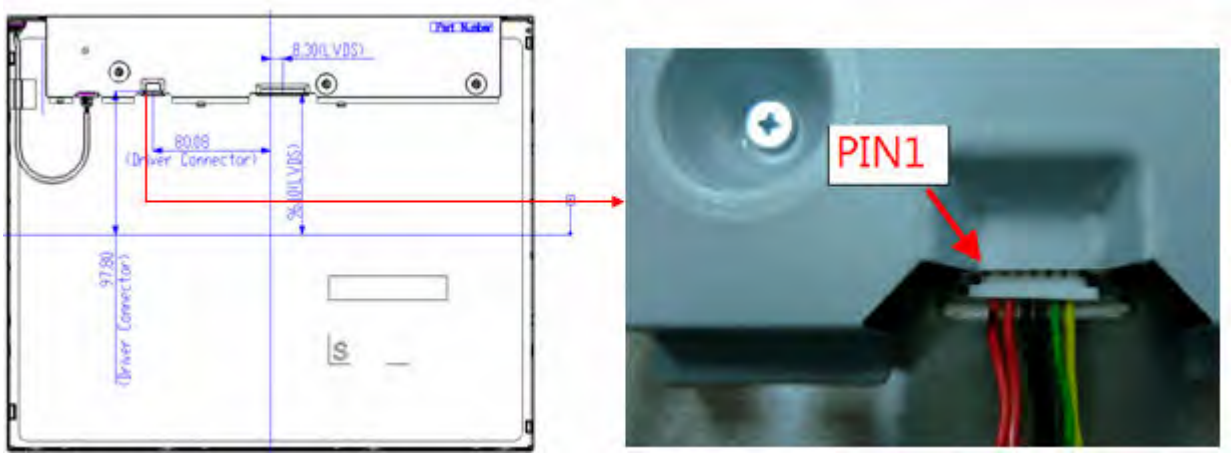

8. Reliability Test

Environment test conditions are listed as following table.

Items	Required Condition	Note
Temperature Humidity Bias (THB)	Ta= 50□, 80%RH, 300hours	
High Temperature Operation (HTO)	Ta= 85□, 300hours	
Low Temperature Operation (LTO)	Ta= -30□, 300hours	
High Temperature Storage (HTS)	Ta= 85□, 300hours	
Low Temperature Storage (LTS)	Ta= -30□, 300hours	
Vibration Test (Non-operation)	Acceleration: 1.5 G Wave: Random Frequency: 10 - 200 - 10 Hz Sweep: 30 Minutes each Axis (X, Y, Z)	
Shock Test (Non-operation)	Acceleration: 50 G Wave: Half-sine Active Time: 20 ms Direction: ±X, ±Y, ±Z (one time for each Axis)	
Drop Test	Height: 60 cm, package test	
Thermal Shock Test (TST)	-20□/30min, 60□/30min, 100 cycles	
On/Off Test	On/10sec, Off/10sec, 30,000 cycles	
ESD	Contact Discharge: ± 8KV, 150pF(330Ω) 1sec, 8 points, 25 times/ point.	1
	Air Discharge: ± 15KV, 150pF(330Ω) 1sec 8 points, 25 times/ point.	
EMI	30-230 MHz, limit 40 dBu V/m, 230-1000 MHz, limit 47 dBu V/m	
Altitude Test	Operation:10,000 ft Non-Operation:30,000 ft	

Note1: According to EN61000-4-2, ESD class B: Some performance degradation allowed. No data lost Self-recoverable. No hardware failures.

Note2:

- Water condensation is not allowed for each test items.
- Each test is done by new TFT-LCD module. Don't use the same TFT-LCD module repeatedly for reliability test.
- The reliability test is performed only to examine the TFT-LCD module capability.
- To inspect TFT-LCD module after reliability test, please store it at room temperature and room humidity for 24 hours at least in advance.
- No function failure occurs.

9. Label and Packaging

9.1 Shipping Label (on the rear side of TFT-LCD display)

The shipping label format is shown as below.

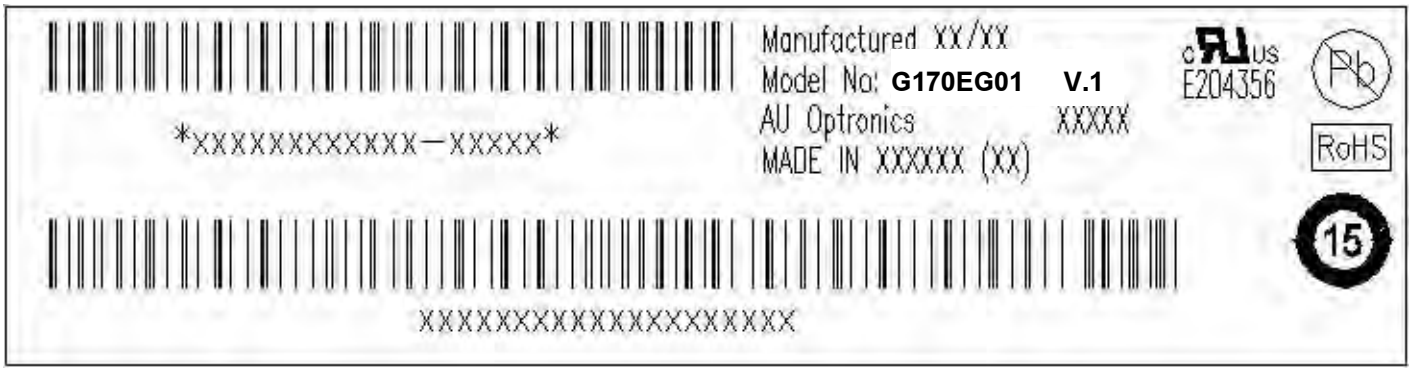

9.2 Carton Package

Max capacity：8 TFT-LCD module per carton
Max weight: 18 kg per carton
Outside dimension of carton:434(L)mm*278(W)mm*391(H)mm

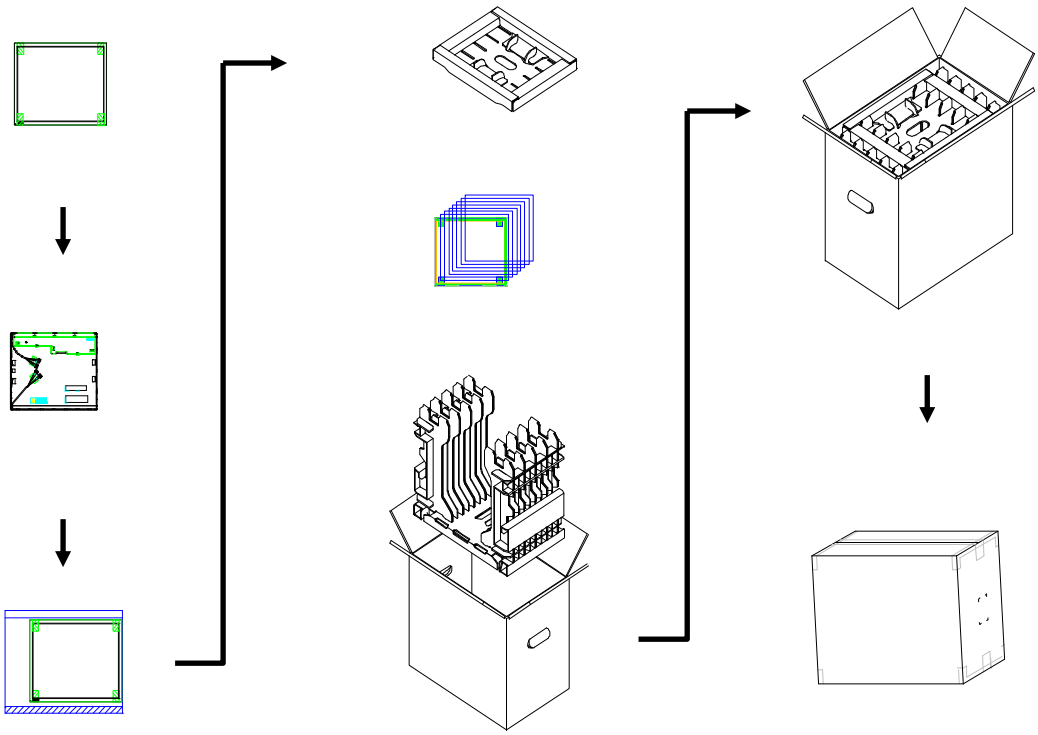

9.3 Palletizing

	MAX_SHIPPING BY AIR	MAX_SHIPPING BY SEA	MAX_SHIPPING BY SEA_HQ
MODULE/CARTON	8	8	7
CARTON/LAYER	8	8	8
LAYER/PALLET	3	3+1	3+2
MODULE/PALLET	192	256	280
CARTON SIZE(MM)	434(L)*278(W)*391(H)	434(L)*278(W)*391(H)	434(L)*278(W)*391(H)
PALLET SIZE(MM)	1140(L)*890(W)*135(H)	1140(L)*890(W)*135(H)	1140(L)*890(W)*135(H)
TOTAL PALLET HEIGHT(MM)	1308	1834	2258
TOTAL PALLET WEIGHT(KG)	445	602	746

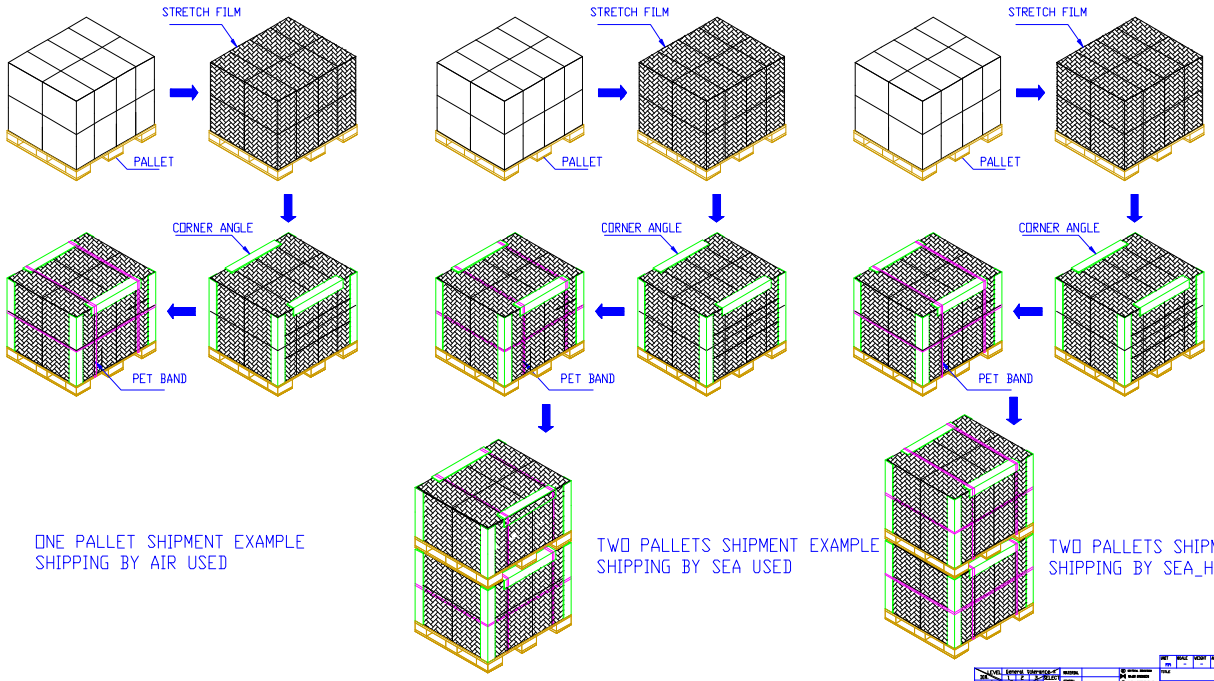

10. Mechanical Characteristics

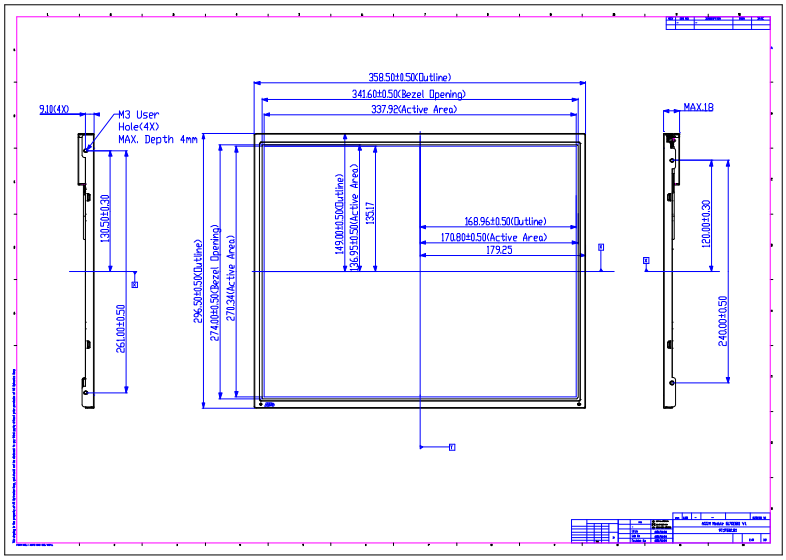

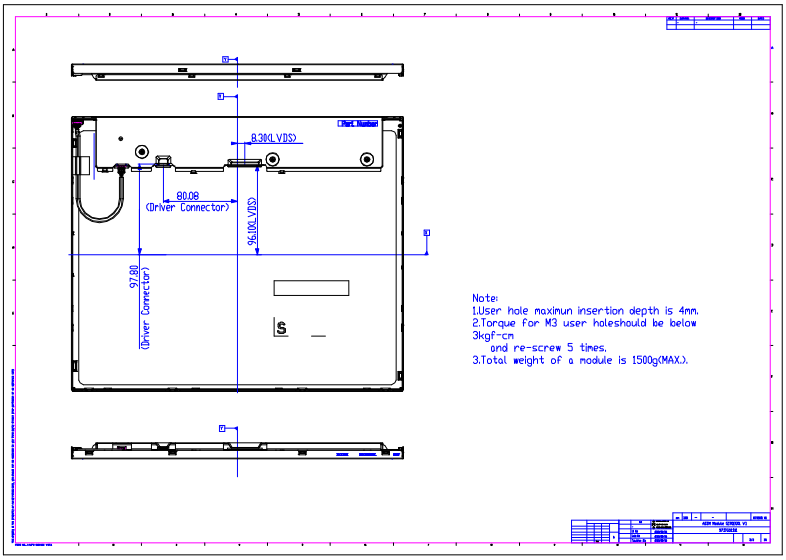

Specification

Of

Touch 10170001 V0

1. General

1.1 This document is included the specifications of touch screen.
1.2 This touch screen is 5 wires analog resistive type.
1.3 It is designed to be activated by pressure of finger or stylus.

2. Environmental Specifications

2.1 Storing Environment
Temperature Range：- 20℃ ～ 70℃
Humidity Range：20% RH ～ 90% RH (Non Condensing)

2.2 Operating Environment
Temperature Range： -10℃ ～60℃
Humidity Range：20% RH ～80% RH (Non Condensing)

2.3 The above envionment is under normal pressure of the atmosphere.

3. Mechanical Specifications

3.1 Touch panel style

style : Analog resistance

3.2 Dimension Specifications:

Dimension outline	356.00 x 286.50 mm ± 0.30mm
Viewable area	343.00 x 275.50 mm ± 0.20mm
Active area	337.00 x 269.50 mm ± 0.20mm
Total thickness	2.20 mm ± 0.20mm
Tail length	205.00 mm ± 6.00mm

3.3 Operating Force ≦ 80g (R0.8 Touch Pen)

3.4 Surface Hardness ≧ 3H (ASTM D3363, pressure 750g/45°)

3.5 Static Load : 5 kg within 10cm² area for 30sec

3.6 Impact : Impact at center area one time , no damage (25.0ψDIA. Steel Ball/67g , Height=50cm)

3.7 Bending : 90° 10 times left & right

3.8 Peeling : 800g by vertical 90°

4. Optical Specifications

4.1 Transparency ： 80 ±3% (BYK Gardner , 550nm , ASTM D1003)

4.2 Haze：8 ±3%(BYK Gardner , ASTM D1003)

5. Electrical Specifications

5.1 Loop resistance X:20Ω ～ 500Ω , Y:20Ω ～ 500Ω

5.2 Voltage endurance DC 50V/60sec.

5.3 Linearity deviation X≦ 1.5% ，Y≦ 1.5%

5.4 Insulation resistance ≧ 20MΩ/25V DC

5.5 Chattering ≦10ms

6. Appearance Inspection

6.1 The inspection shall be performed by using one 17w fluorescent lamp as back or side light . The panel shall be placed at 30cm away from eyes. (Figure1.1 and Figure1.2)

.

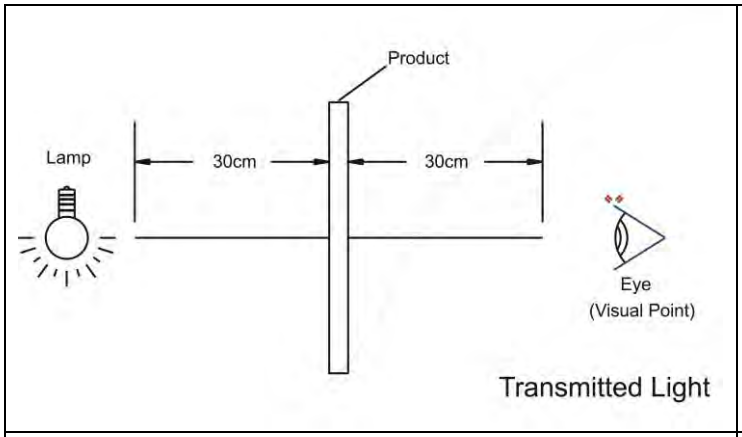

Figure 1.1

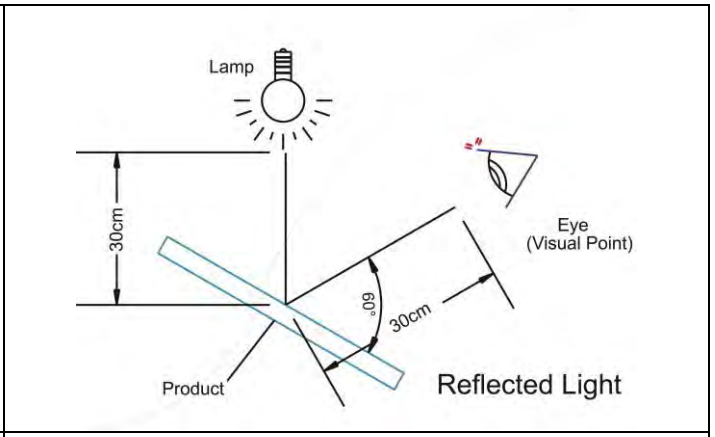

Figure 1.2

6.2 The flaws and Impurities are allowed outside viewing area except those affecting electrical functions.

Inside the viewing area , it meets the following :

(1) Linear Object :

W ≦ 0.05 mm OK

0.05 mm < W ≦ 0.1 mm and L≦20, total≦5 OK

W > 0.1 mm No good

(W : width of flaws , L : length of flaws)

(2) Dot-shaped Impurities :

D ≦ 0.4 mm OK

0.4 mm < D ≦ 0.6 mm , each area contains≦3, total≦6 OK

D > 0.6 mm No good

(D : average of diameter , Each area contains=20 ϕ)

(3) Scratch：

W ≦ 0.04 OK

0.04 mm < W ≦ 0.06 mm and L ≦ 12 mm , total≦7 OK

0.07 mm < W ≦ 0.1 mm and L ≦ 6 mm , total≦6 OK

W > 0.1 mm ，No good

(W : width of scratch , L : length of scratch)

Glass Flaw

(1) Progressive Flaw : No good (Figure2.1)

(2) corner chips : X ≦ 3 mm , Y ≦ 3 mm , Z ≦ T (Figure2.2)

(3) border chips : X ≦ 10 mm , Y ≦ 3 mm , Z ≦ T (Figure2.3)

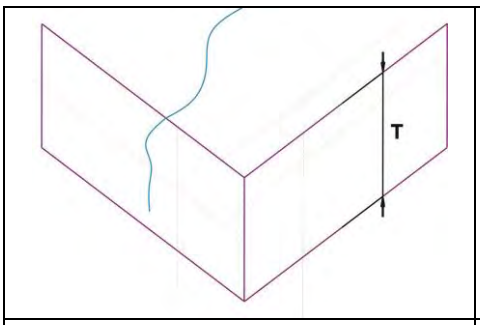

Figure 2.1

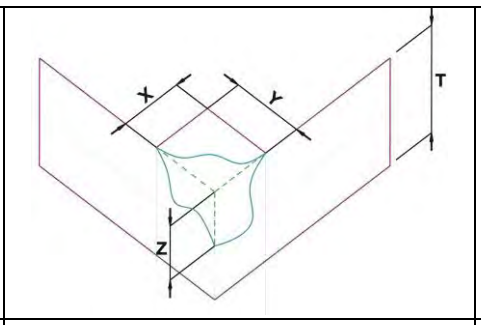

Figure 2.2

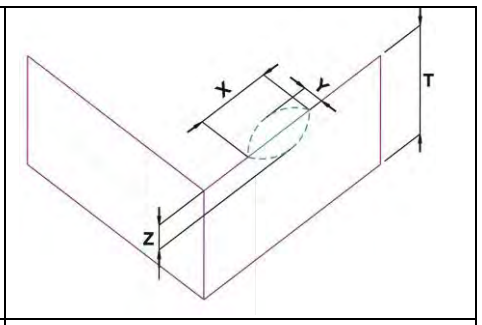

Figure 2.3

X : Width direction against the edge line.
Y : Length direction against the edge line.
Z : Thickness direction against the edge line.

The chips are not supposed to affect any of the electrical functions.

7. Durability

Knock test : 10,000,000 times keystrokes

They still meet the specification required in section 5.1 and 5.4 , and section 5.3 satisfies X≦2.5%, Y≦2.5% ; Operating force must not exceed 250g after reliability test

8. Reliability

8.1 High temperature test
After putting panels at 70℃ for 240 hours and allow panels stay in normal environment for 4 hours , they still meet the specification required in section 5.1 and 5.4 , and section 5.3 satisfies X≦2.5%, Y≦2.5% ; Operating force must not exceed 250g after reliability test

8.2 Low temperature test
After putting panels at -20℃ for 240 hours and allow panels stay in normal environment for 4 hours , they still meet the specification required in section 5.1 and 5.4 , and section 5.3 satisfies X≦2.5%, Y≦2.5% ; Operating force must not exceed 250g after reliability test

8.3 High temperature and high humidity test
After putting panels at 60℃ , 90% RH for 240 hours and allow panels stay in normal environment for 4 hours , they still meet the specification required in section 5.1 and 5.4 , and section 5.3 satisfies X≦2.5%, Y≦2.5% ; Operating force must not exceed 250g after reliability test

8.4 Thermal shock test
1 Cycle : -20℃ →70℃ (60 minutes period)
After putting panels for 50 cycles and allow panels stay in normal environment for 4 hours , they still meet the specification required in section 5.1 and 5.4 , and section 5.3 satisfies X≦2.5%, Y≦2.5% ; Operating force must not exceed 250g after reliability test

8.5 All the above tests may cause the film puffed .

9. Inspection Method

9.1 Linearity

(1) Short RT and RL(or short RL and LL).
(2) apply voltage DC 5V.
(3) short LT and LL (or short RT and LT).
(4) apply grounding.
(5) draw points along Lx and Ly at 5.0mm intervals within pattern area and detect the voltage at SG.
(6) measure the voltage differences between RT and LT(or RT and RL)

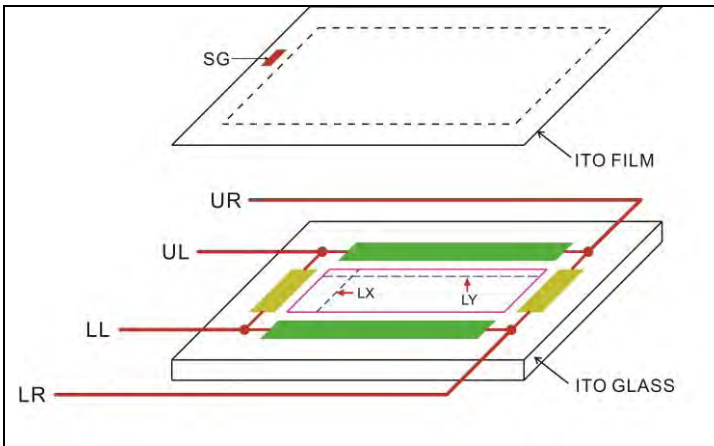

Figure 3.1

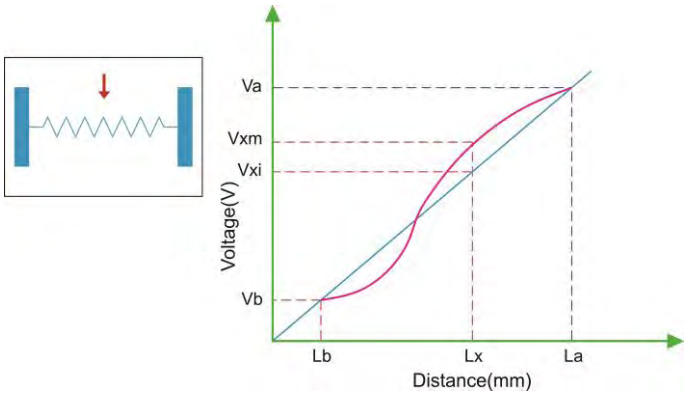

Figure 3.2

9.2 Specification

Linearity must meet the electrical characteristic specified in section 5.3

10. Warranty

Miracletouch provide two years warranty of Miracletouch products.

The followings are not in guaranty:

(1) Damages caused by improper handling from clients, including shipping, installation and integration.
(2) Damage caused by self-repairs, modifications or disassembling of the product.
(3) Damages caused by disasters, either by natural causes or human factors, after the delivery of products

11.Cautions

11.1 The bezel which contacts with PET film should keep a distance at least 3 mm from the active area to avoid short.

11.2 The bezel which contacts with PET film should not place heavy pressure on the film and the surface of bezel should be kept smooth.

11.3 Please keep clean on the surface of PET film , Don't attach any tape on that.

11.4 Neither pull tail upward nor push downward with an angle of 90° It should keep an arch at least R5.

11.5 If there exist any high voltage power , please make an adequate protect.

11.6 To avoid the high voltage static power to damage panel , please don't operate touch panel without connecting controller.

11.7 The panel could be cleaned with cloth containing ethanol or neutral cleaner. It is no effects to the characteristics

11.8 Miracletouch retain the right of changing the materials with same grade and specification.

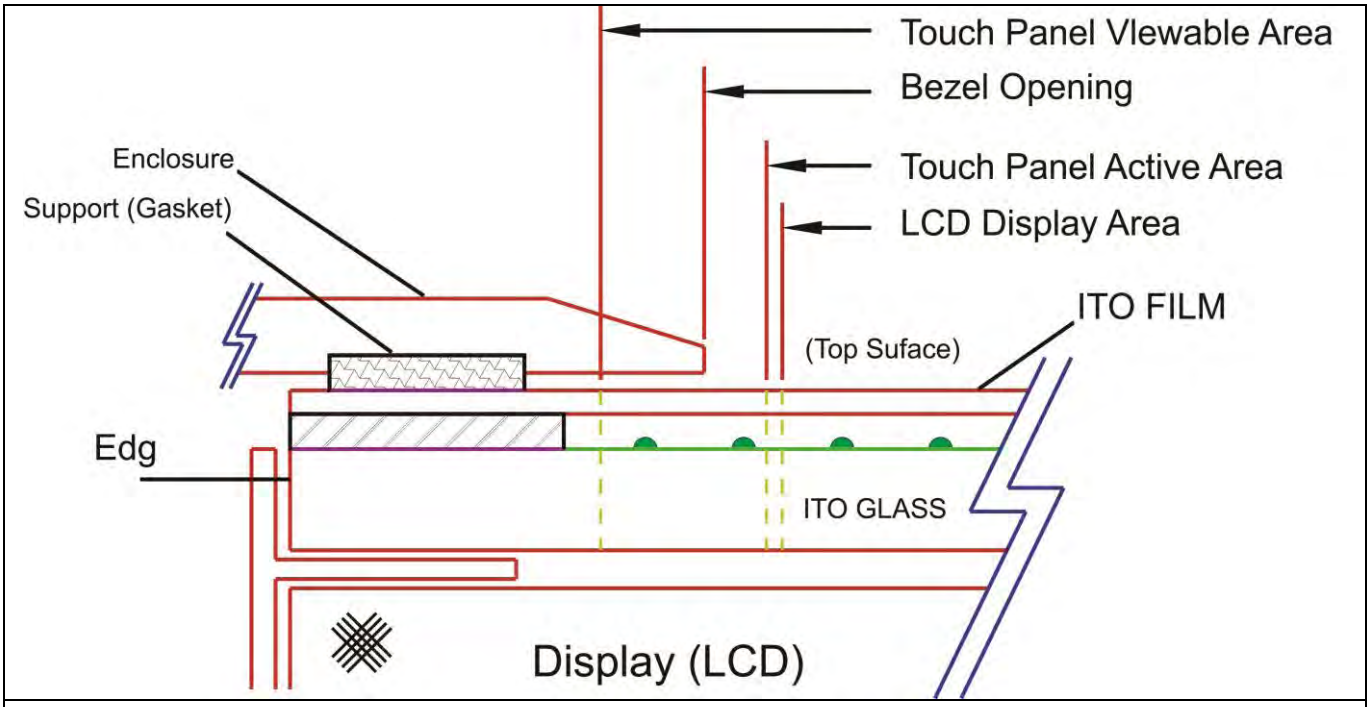

Figure 4.1

Connector Pinout	
Pin NO.	Designation
1	UR
2	LR
3	SG
4	UL
5	LL

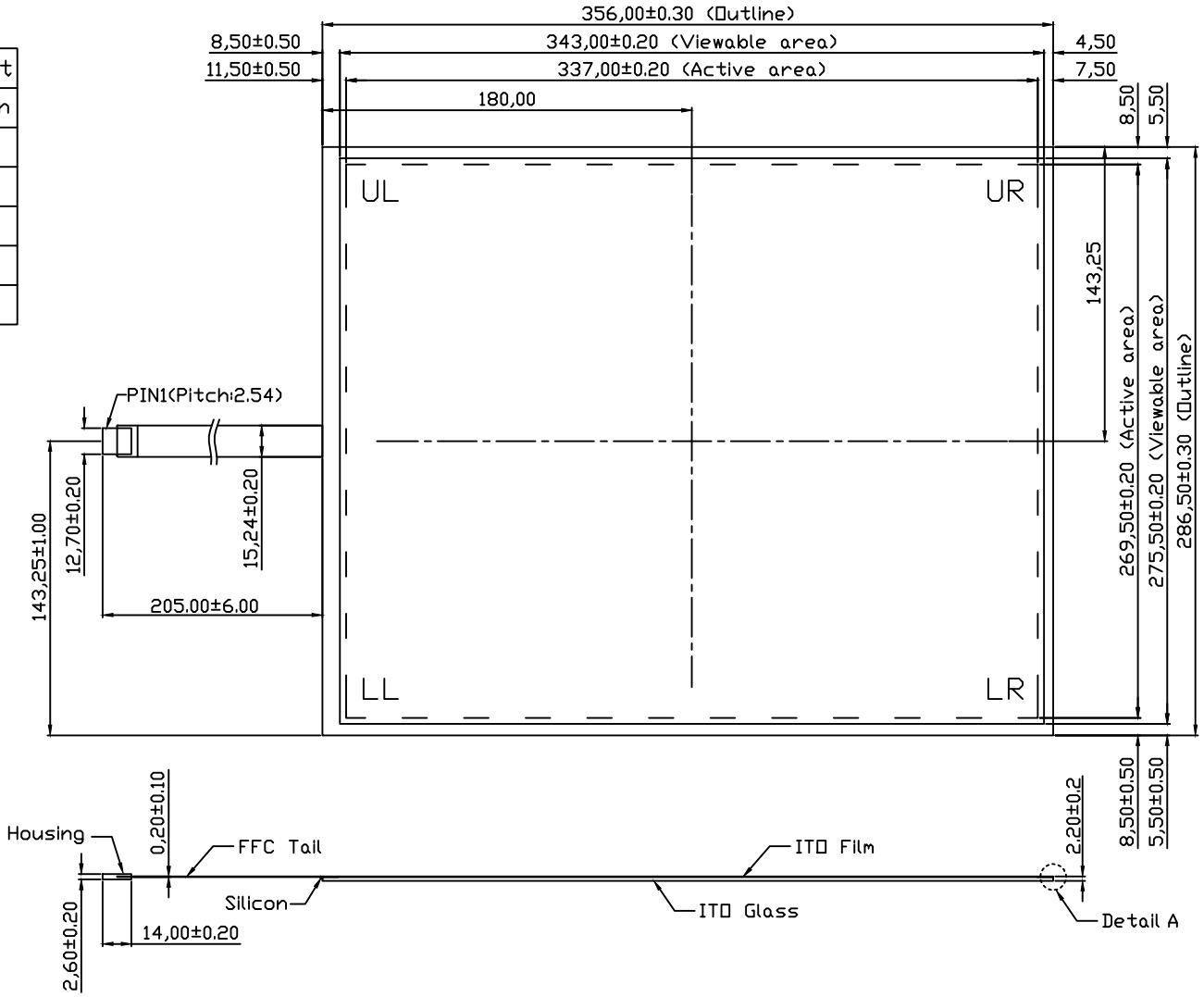

Detail A

REV	DATE	DESIGN	DATE	APPROVED
01	2012.11.25	Eric	2012.11.25	Eric

THIRD ANGLE	MODEL	17" 5W Touch Panel
	DRAWING NO.	10170001

Specification

Of

Touch Controller Board CAB-MB-MER4050UEBG-02

CAB-MB-MER4050UEBG-02

5-Wire USB
Touch Panel Controller

This touch control board provides an optimised performance for 5wire analog resistive touch panels. It is sensitive, accurate and come with a user-friendly touch panel driver that emulates mouse left and right button function.

The controller has met latest Restriction of Hazardous Substances (RoHS) Directive, it communicates with host system through USB or RS232 interface, supporting operation systems are as followed list.

OS	Version	Interfaces
Windows	Windows 7 Windows Vista, XP/2000, 9x/ME Windows CE 2.12/3.0/.net(4.0/5.0)/6.0/7.0 Windows Embedded Windows XP Tablet PC edition	RS232 USB PS2
Windows	Windows NT4	RS232 PS2
Linux	*The new Linux driver supports most of the Linux distribution on 32/64 bit versions, including Kernel 2.4.x/2.6.x/3.X with XFree86 4.X / Xorg 6.7 to 7.7 (Up to X server 1.11.x)* CentOS, Debian, Fedora, Gentoo, Mandrake (Mandriva), Red Hat, Slackware, SuSE (OpenSuSE), Ubuntu (Xubuntu), Yellow Dog, and Meego etc.	RS232 USB PS2
Android	1.6 Donut to 4.0.x Ice Cream Sandwich *(Support X86 and ARM platform)*	RS232 USB I2C
DOS	DOS 6.22	RS232 PS2
Mac	Mac OS 9,X Mac OS X	USB
QNX	QNX Neutrino RTOS v6.3	RS232

CAB-MB-MER4050UEBG-02

Controller:

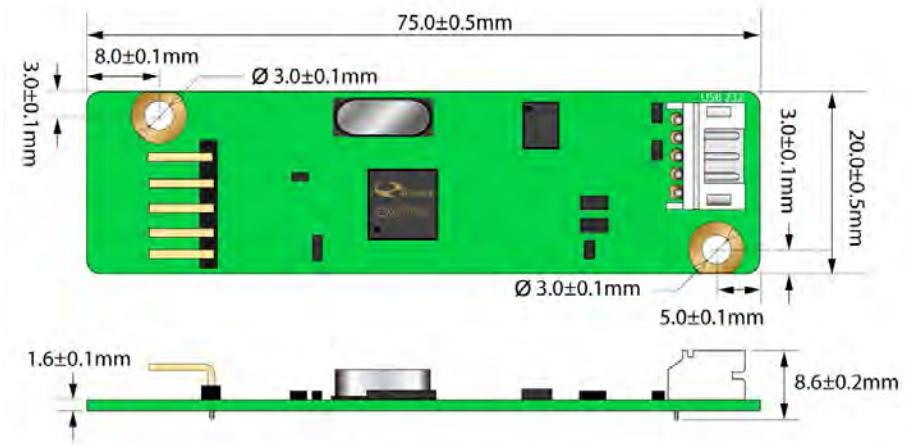

Specifications:

5wire Type Controller	
Circuit Board Dimension	20mm x 75mm (0.79inches x 2.95inches)
Power Requirements	D.C.+5V (100mA typical,50mV peak to peak maximum ripple and noise)
Operating Temperature	-25 to 85 ℃
Storage Temperature	-25 to 85 ℃
Relative Humidity	95% at 60 ℃, RH Non-condensing
Interface	USB: 1.1 Full Speed
Resolution	2048×2048
Report rate	USB: Max. 200 points/sec
Response time	Max. 20 ms
Attached Cable	USB: 180cm shielded cable with USB-A onnector
Regulatory Approvals	FCC-B , CE
EMI	Unaffected by environmental EMI
Panel resistance	5 wire resistive model: 50 ~ 200 ohm (Pin to pin on same layer, Touch Resistance under 3k ohm)
Green Product	RoHS Compliant
MTBF	200,000 hrs

CAB-MB-MER4050UEBG-02 Full Package includes:

(1) CAB-MB-MER4050UEBG (5 wire control board)

(2) CAB-CB-SXU00 (USB cable)

(3) CAB-CB-5XN00 (5 pin Flat cable)

CAB-MB-MER4050UEBG-02

For 5-Wire Resistive Touch Panel

Controller Panel Pin Assignment:

ELO TYPE Pin-Out

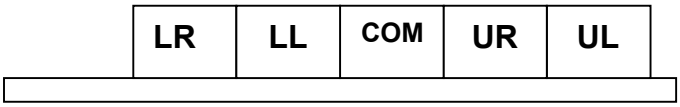

ELO PIN-OUT

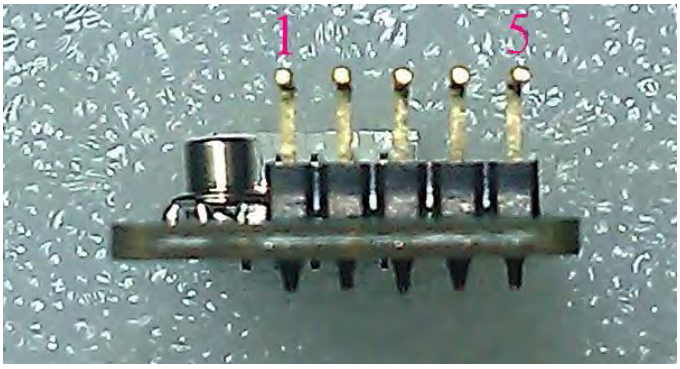

Controller Wafer Pin Assignment:

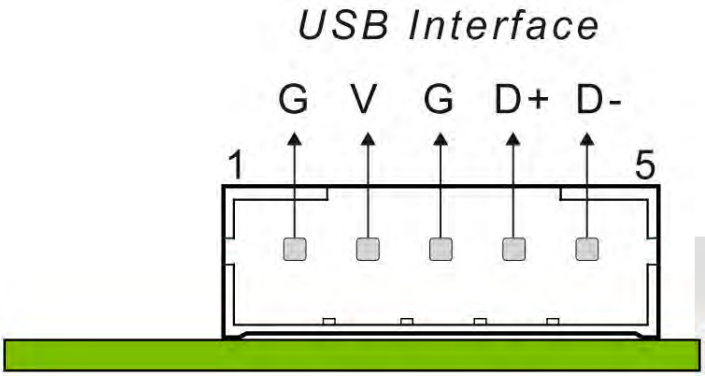

Rev V1.01

Specification

Of

A/D Board Kit CAB-F2281L-01 (VGA/DVI)

1. General Description

1.1 Introduction

The CAB-F2281L is highly integrated TFT flat panel interface board that allows connect analog, 15 pin RGB source with TFT panels. From a single 12 V power supply, the CAB-F2281L generates all the voltages required by the TFT panel and includes the power sequencing features. The CAB-F2281L is capable of displaying FULL HD and lower resolutions. Synchronization signals of applicable resolution modes can be detected automatically.

1.2 Technical Information Summary

Analog RGB Input port

- **Support up to 1920 X 1080**
- **Support for Sync-on-Green (SOG)**

DVI Compliant Digital Input

- **Single link on chip TMDS receiver**
- **Long cable support to 1.65Ghz**

Scaling

- **Support non-liner scaling from 4:3 to 16:9 or 16:9 to 4:3**

Audio: 2W x 2

OSD key: Up to 7 KEY.

1.2 Power consumption

Panel: AU 19”

DC IN: 12V

Inverter: 4 Lamp

Resolution: 1280 X 1024 75Hz

Condition	Audio minimum	Audio maximum
A/D Board only	3W	
A/D Board + Panel + Inverter	26W	28W
Power saving	0.4W	

2. Dimension & Pin definition

Dimension: 130mm (L) *51 mm (W)* 14.2mm(H)

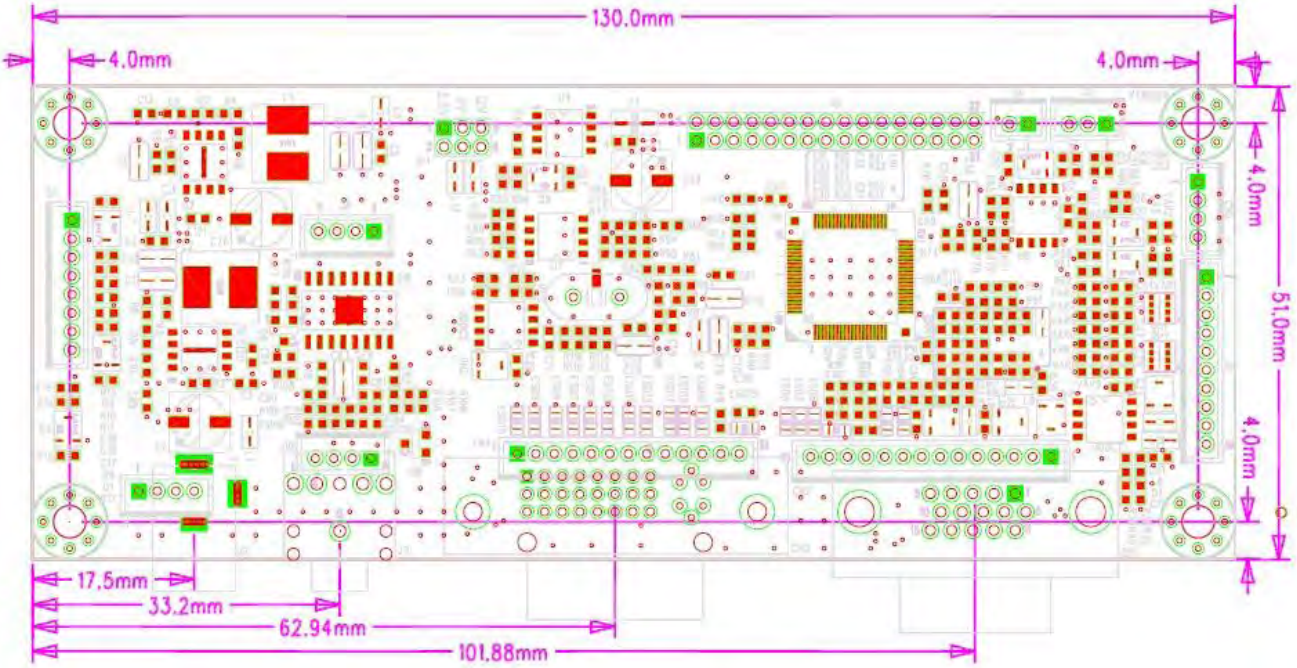

2.1 PIN Define

Item	SPECIFICATION	Description
LVDS Output	32 PIN	J5
VGA	14 PIN	CN2
DVI	13 PIN	CN4
OSD KEY	10 PIN	J6
Inverter	5 PIN	J3
Speaker Out	4 PIN	J8
Audio In	4 PIN	J10
POWER	4 PIN	J1

LVDS OUT (J5)

PIN	FUNCTION	PIN	FUNCTION
1	VCC	2	VCC
3	RXO0-	4	RXO0+
5	RXO1-	6	RXO1+
7	RXO2-	8	RXO2+
9	GND	10	GND
11	RXOC-	12	RXOC+
13	RXO3-	14	RXO3+
15	GND	16	GND
17	RXE0-	18	RXE0+
19	RXE1-	20	RXE1+
21	RXE2-	22	RXE2+
23	GND	24	GND
25	RXEC-	26	RXEC+
27	RXE3-	28	RXE3+
29	GND	30	GND
31	NC	32	NC

OSD KEY : **J6 WAFER 10 pin 2.0mm**

PIN	FUNCTION	PIN	FUNCTION
1	GREEN-LED	2	GND
3	RED-LED	4	POWER-KEY
5	MENU-KEY	6	AUTO-KEY
7	RIGHT-KEY	8	LEFT-KEY
9	UP-KEY	10	DOWN-KEY

INVERTER

J3 WAFER 5pin 2.0mm

PIN	Function	PIN	Function
1	+12V	2	GND
3	Brightness	4	GND
5	ON/OFF		-

Speaker out: J8 WAFER 4pin 2.0mm

PIN	FUNCTION	PIN	FUNCTION
1	**AUDIO LOUT**	**2**	**GND**
3	**AUDIO ROUT**	**4**	**GND**

Power in: J1 WAFER 4pin 2.0mm

PIN	FUNCTION	PIN	FUNCTION
1	**+12V**	**2**	**+12V**
3	**GND**	**4**	**GND**

3. Applicable Timing

Resolution	Refresh Rate	Horizontal Frequency	Pixel Frequency	Standard Type	Remarks
640 x 400	70 Hz	31.46 KHz		VESA Standard	
720 x 400	70 Hz	31.46 KHz		VESA Standard	
640 x 480	60 Hz	31.50 KHz	25.175 MHz	Industrial Standard	
	72 Hz	37.90 KHz	31.500 MHz	VESA Standard	
	75 Hz	37.50 KHz	31.500 MHz	VESA Standard	
800 x 600	60 Hz	37.9 KHz	40.000 MHz	VESA Guideline	
	72 Hz	48.10 KHz	50.000 MHz	VESA Standard	
	75 Hz	46.90 KHz	49.500 MHz	VESA Standard	
1024 x 768	60 Hz	48.40 KHz	65.000 MHz	VESA Guideline	
	70 Hz	56.5 KHz	75.000 MHz	VESA Standard	
	75 Hz	60.00 KHz	78.750 MHz	VESA Standard	
1280 x 1024	60 Hz	64.00 KHz	108.000 MHz		
	75 Hz	80.00 KHz	135.000 MHz		
1360 x 768	60Hz	47.70KHz	85.500MHz		
1440 x 900	60Hz	59.9KHz	106.500MHz		
	75Hz	75.0KHz	136.750MHz		
1600 X 1200	60Hz	75.0KHz	162.000MHz		
	75Hz	93.8KHz	202.500MHz		
1680 X 1050	60Hz	64.7KHz	119.000MHz		
	75Hz	74.9KHz	187.000MHz		
1920 X 1080	60Hz	59.9KHz	106.500MHz		

4. LCD OSD Setting

4.1 OSD Control Button

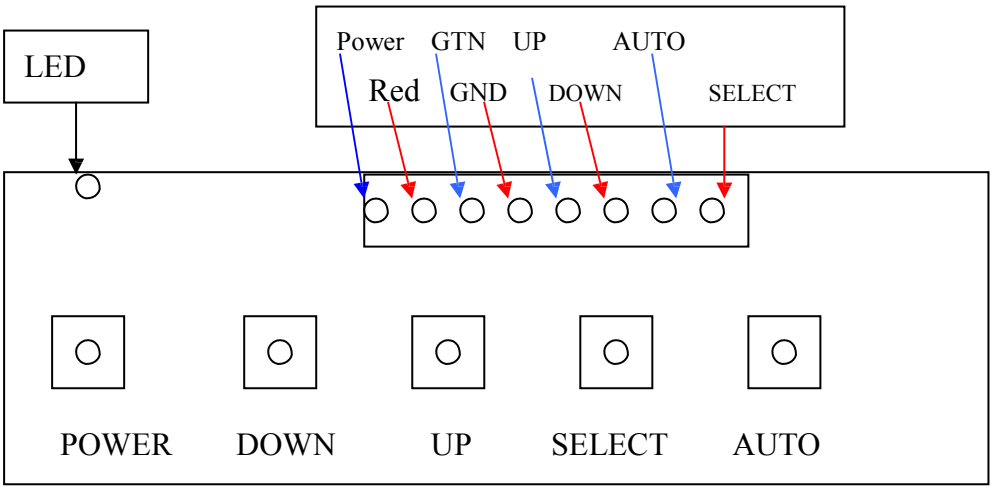

Down / Left (◄): Decrease setting or scroll down the menu bar
Up / Right (►): increase setting or scroll up the menu bar
SELECT (MENU): Activate OSD menu
Power: Turn on or off the main board

4.2 OSD (On Screen Display)

4.2-1

Picture

4.2-2

Display

4.2-3

Color

4.2-4

Advance

4.2-5

Source

4.2-6

Audio

4.2-7

Other

4.2-8

Information

5. Burn in mode & other setting

5.1 Burn in mode

When no input signal, you can press “MENU” key & “POWER” key at same time to run the

“Burn in” mode, when the VGA or DVI signal input, will return to normal mode.

5.2. Factory mode

Drawing

Of

VGA Cable

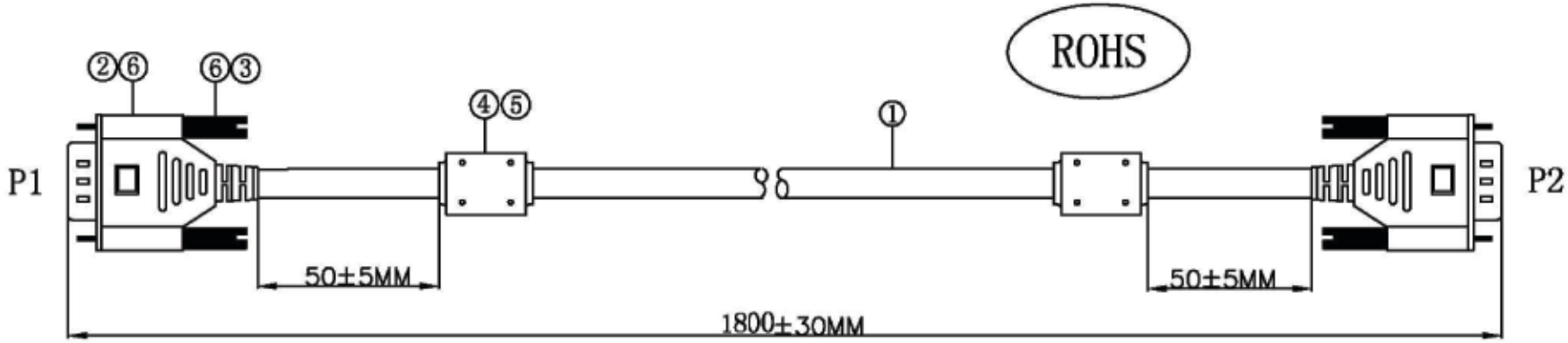

	Material Name Specification	用量
1	20276(30#*1C+EA)*3C+(30#*1C+EA)*1C+30# *4C+AL+128B+GND OD5.5 BLACK	1500MM
	兄 AWM E89980-C SUNF PU STYLE 20276 80℃ 30V VW-1 CSA LL64151-C AWM II A/B 80℃ 30V FT1-	
	E210567 兄 AWM 20276 80℃ 30V VW-1...C 兄 AWM 80℃ 30V I/II A FT1 KAIBO(间隔25MM) LF	
	AWM E101344 STYLE 20276 80℃ 30V DVI DIGITAL SINGLE LINK SPACE SHUTTLE-Z	
2	HDB15PM OD7.0	2set
3	螺丝2.3*32MM SCREWS	4PCS
4	9.8*13.5*6.35MM	2PCS
5	PVC 45P BLACK	8g
6	PVC 30P BLUE	24.6g

P1	color	P2
1	RED	1
2	GREEN	2
3	BLUE	3
10	BLACK	10
12	Orange	12
13	Transparent	13
14	White	14
15	Yellow	15
4/5/6/7/8/11/16		4/5/6/7/8/11/16

Name: VGA CABEL	
Version:	Unit: MM
	Date: 12/02/03