IEI Integration Corp.

MODEL:

DRPC-120-BTi

Fanless Embedded System with Intel® Atom™ E3845 CPU, DIN Rail Mounting Support, OLED Display or LED Indicators, Dual GbE, USB, DIO, Serial Ports, 9V~28V DC Power Input, RoHS Compliant

User Manual

Rev. 1.04 – March 1, 2017

RoHS Lead Free

Revision

Date	Version	Changes
March 1, 2017	1.04	Modified Chapter 2
July 30, 2015	1.03	Added the Watchdog Timer appendix
June 11, 2015	1.02	Added maximum input wattage (36 W) information
March 25, 2015	1.01	Added a warning message in Section 3.3: HDD Installation Added Appendix A: Regulatory Compliance
November 20, 2014	1.00	Initial release

Copyright

COPYRIGHT NOTICE

TRADEMARKS

Manual Conventions

WARNING

Warnings appear where overlooked details may cause damage to the equipment or result in personal injury. Warnings should be taken seriously.

CAUTION

Cautionary messages should be heeded to help reduce the chance of losing data or damaging the product.

NOTE

These messages inform the reader of essential but non-critical information. These messages should be read carefully as any directions or instructions contained therein can help avoid making mistakes.

HOT SURFACE

This symbol indicates a hot surface that should not be touched without taking care.

Table of Contents

List of Figures

List of Tables

Chapter

1

Introduction

1.1 Overview

Figure 1-1: DRPC-120-BTi Series

The DRPC-120-BTi fanless embedded system is powered by the Intel® Atom™ E3845 processor. It is designed for harsh environment applications, and supports DIN rail mounting method.

The DRPC-120-BTi accepts a wide range of DC power input (9 V ~ 28 V), allowing it to be powered anywhere. Two USB 3.0, two USB 2.0, two GbE, two RS-232, two RS-422/485, and one 8-bit DIO provide rich I/O options for various applications.

1.2 Model Variations

The model variations of the DRPC-120-BTi are listed below.

Model No.	Indicators
DRPC-120-BTi-E5-LED/2G	LED
DRPC-120-BTi-E5-OLED/2G	OLED

Table 1-1: DRPC-120-BTi Model Variations

1.3 Features

The DRPC-120-BTi features are listed below:

- 1.91 GHz quad-core Intel® Atom™ E3845 processor
- Low power consumption
- Fanless design
- DIN rail mounting support
- Preinstalled one 2 GB DDR3L SO-DIMM (system max. 8 GB)
- Supports one mSATA and one 2.5” SATA HDD
- Wide range DC power input (9 V ~ 28 V, max. 36 W)
- Extended temperature fanless design supports -20°C ~ 60°C (with SSD)
- Two PCIe Mini card slots
- Serial interfaces with isolation protection
- 8-bit digital IO (4-bit output, 4-bit input)
- Supports two GbE, two USB 3.0, two USB 2.0, two RS-232 and two RS-422/485
- LED indicators (DRPC-120-BTi-E5-LED only)
- Programmable OLED display (DRPC-120-BTi-E5-OLED only)
- RoHS compliant

1.4 Connector Panel

1.4.1 Front Panel

The DRPC-120-BTi front panel contains:

- 2 x RJ-45 Gigabit LAN ports
- 2 x RS-232 serial ports with isolation
- 2 x RS-422/485 serial ports with isolation
- 2 x USB 3.0 ports
- 2 x USB 2.0 ports
- LED or OLED indicators
- Function keys (DRPC-120-BTi-E5-OLED only)

The overview of the front panels of both model are shown in **Figure 1-2** and **Figure 1-3**.

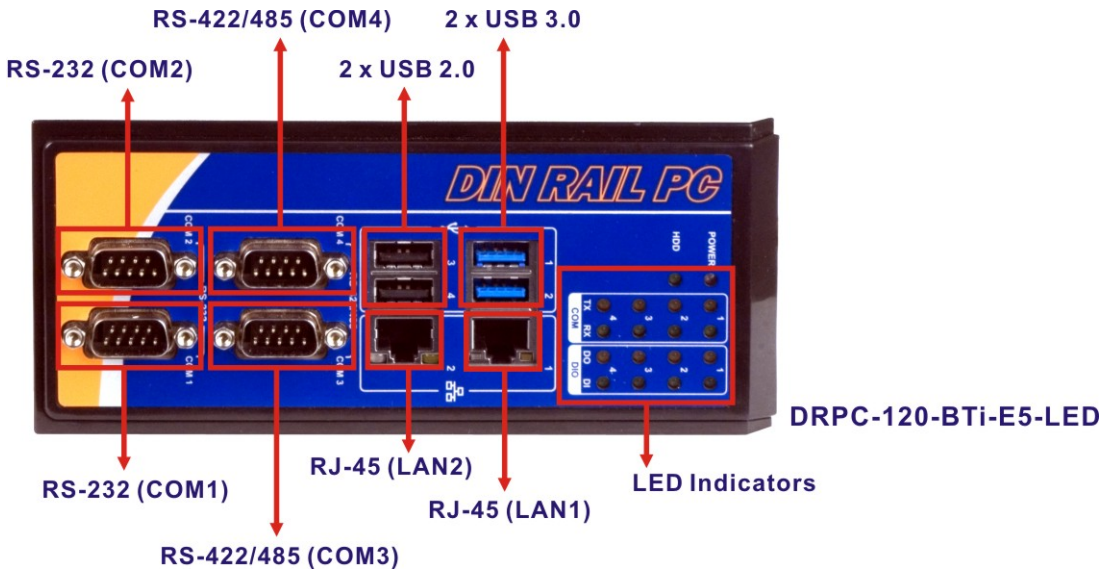

Figure 1-2: DRPC-120-BTi-E5-LED Front Panel

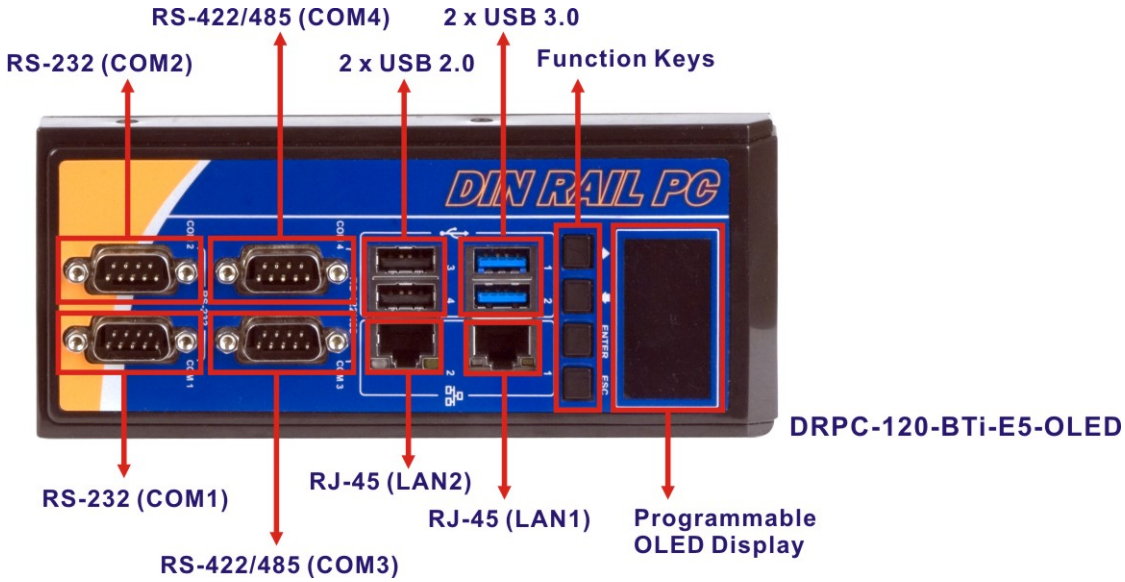

Figure 1-3: DRPC-120-BTi-E5-OLED Front Panel

1.4.2 Top Panel

The DRPC-120-BTi top panel contains:

- 1 x 8-bit digital I/O (Phoenix terminal block, 4-bit input/4-bit output)
- 1 x 9 V ~ 28 V DC power terminal block
- 1 x AT/ATX power switch
- 1 x HDMI connector
- 1 x Power button
- 1 x Reset button
- 1 x VGA connector

An overview of the top panel is shown in **Figure 1-4** below.

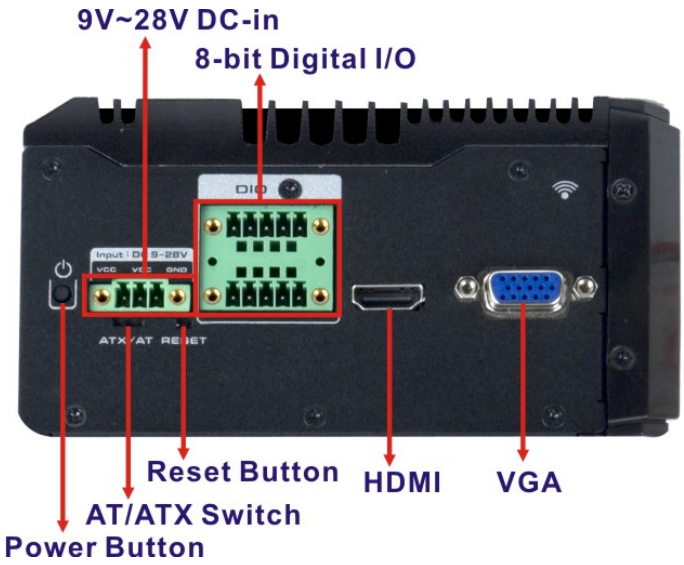

Figure 1-4: DRPC-120-BTi Top Panel

1.5 LED Indicators (DRPC-120-BTi-E5-LED Only)

The LED indicators on the front panel of the DRPC-120-BTi-E5-LED are shown in **Figure 1-5**.

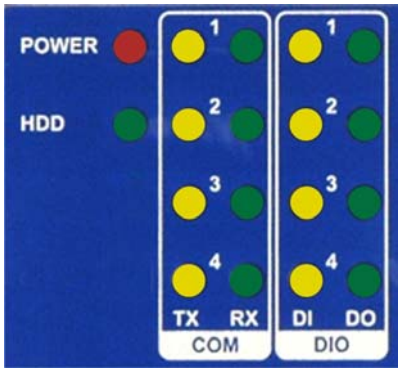

Figure 1-5: LED Indicators of DRPC-120-BTi-E5-LED

All the LED definitions are listed in **Table 1-2**.

LED	Color	Status	Description
POWER	Red	On	System power is on
		Off	System power is off
HDD	Green	Blinking	Storage device accessing

		Off	Storage device not accessing
COM TX 1~4	Yellow	On	COM port is transmitting data
		Off	COM port is not transmitting data
COM RX 1~4	Green	On	COM port is receiving data
		Off	COM port is not receiving data
DIO DI 1~4*	Yellow	On	Active
		Off	Inactive
DIO DO 1~4*	Green	On	Active
		Off	Inactive
***** When the DIO is set to pull-high, the DIO LED indicators always light up. When the DIO is set to pull-low, the DIO LED indicators are always off.			

Table 1-2: DRPC-120-BTi-E5-LED LED Definitions

1.6 Programmable OLED Display (DRPC-120-BTi-E5-OLED Only)

For programming the OLED display on the front panel of the DRPC-120-BTi-E5-OLED, refer to **Chapter 6**.

1.7 Technical Specifications

The DRPC-120-BTi technical specifications are listed in **Table 1-3**.

Specifications	
System	
CPU (SoC)	1.91 GHz quad-core Intel® Atom™ E3845 processor
Memory	One 2 GB 204-pin DDR3L SO-DIMM preinstalled (system max. 8 GB)
Ethernet Controller	One Intel® I210 GbE controller One Intel® I211 GbE controller
Wireless	802.1b/g/n 1T1R (optional)
IPMI	iRIS-2400 IPMI module (optional)
Supported OS	Microsoft Windows 8, Microsoft Windows Embedded Standard 7

Storage	
HDD	One 2.5” SATA 3Gb/s HDD/SSD bay
mSATA	One PCIe Mini full-size card slot for mSATA module (SATA 3Gb/s)
I/O and Indicators	
Ethernet	2 x RJ-45 ports
RS-232	2 x DB-9 serial ports with 3KV isolation protection
RS-422/RS-485	2 x DB-9 serial ports with 3KV isolation protection
USB	2 x USB 3.0 ports 2 x USB 2.0 ports
Display	Supports resolution up to 1920 x 1200 1 x VGA port 1 x HDMI port
Digital I/O	1 x Phoenix terminal block (8-bit, 4-bit input/4-bit output)
Interior Expansion	1 x PCIe Mini full-size card slot (co-lay mSATA) 1 x PCIe Mini half-size card slot (reserved for optional Wi-Fi module)
Indicators	LED (for DRPC-120-BTi-E5-LED) OLED (for DRPC-120-BTi-E5-OLED)
Buttons	Power button Reset button
Power	
Power Input	One 3-pin terminal block power connector 9 V ~ 28 V DC, max. 36 W
Power Consumption	12V@2.1A (1.91 GHz quad-core Intel® Atom™ E3845 processor with 2 GB memory)
AT/ATX Mode	AT/ATX switch
Environmental and Mechanical	
Mounting	DIN rail, desktop

Operating Temperature	-20°C~60°C with air flow (with SSD)
Storage Temperature	-30°C~70°C
Humidity	5%~95%, non-condensing
Chassis Construction	Extruded aluminum alloy for fanless support
Color	Blue C + Black C
Operating Shock	Half-sine shock test 5G/11ms, 3 shocks per axis
Operating Vibration	MIL-STD-810F 514.5 C-2 (SSD)
Safety	CE/FCC
Weight (Net/Gross)	1.4 kg/2.5 kg
Physical Dimensions	74.8 mm x 140 mm x 171.5 mm (W x D x H)

Table 1-3: Technical Specifications

1.8 Dimensions

The physical dimensions are shown below:

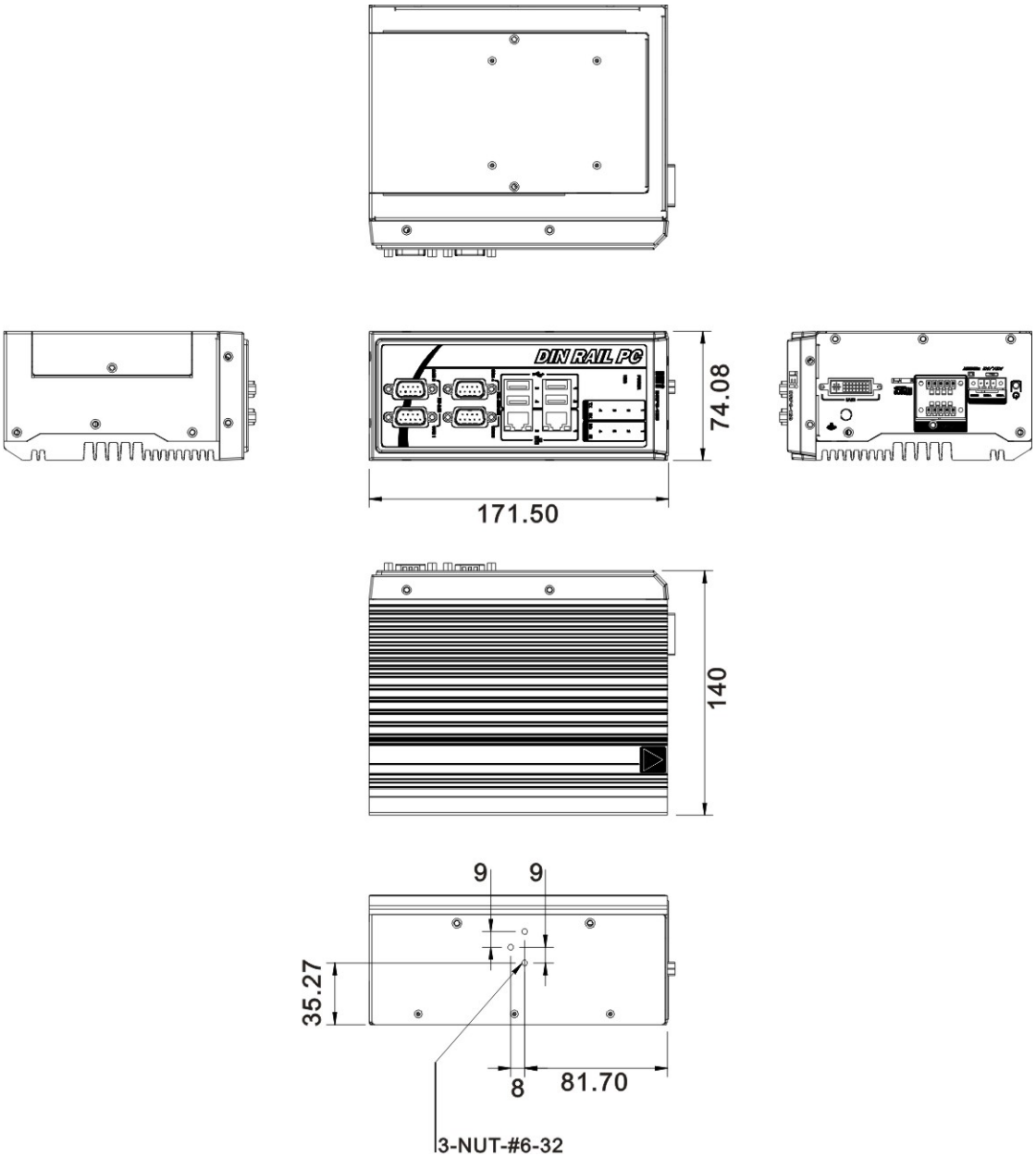

Figure 1-6: Physical Dimensions (millimeters)

Chapter

2

Unpacking

2.1 Anti-static Precautions

WARNING:

Failure to take ESD precautions during installation may result in permanent damage to the DRPC-120-BTi and severe injury to the user.

Electrostatic discharge (ESD) can cause serious damage to electronic components, including the DRPC-120-BTi. Dry climates are especially susceptible to ESD. It is therefore critical that whenever the DRPC-120-BTi or any other electrical component is handled, the following anti-static precautions are strictly adhered to.

- ***Wear an anti-static wristband***: Wearing a simple anti-static wristband can help to prevent ESD from damaging the board.
- ***Self-grounding***: Before handling the board, touch any grounded conducting material. During the time the board is handled, frequently touch any conducting materials that are connected to the ground.
- ***Use an anti-static pad***: When configuring the DRPC-120-BTi, place it on an anti-static pad. This reduces the possibility of ESD damaging the DRPC-120-BTi.

2.2 Unpacking Precautions

When the DRPC-120-BTi is unpacked, please do the following:

- Follow the anti-static precautions outlined in **Section 2.1**.
- Make sure the packing box is facing upwards so the DRPC-120-BTi does not fall out of the box.
- Make sure all the components shown in **Section 2.3** are present.

2.3 Unpacking Checklist

NOTE:

If some of the components listed in the checklist below are missing, please do not proceed with the installation. Contact the IEI reseller or vendor you purchased the DRPC-120-BTi from or contact an IEI sales representative directly. To contact an IEI sales representative, please send an email to sales@ieiworld.com

The DRPC-120-BTi is shipped with the following components:

Quantity	Item and Part Number	Image
Standard		
1	DRPC-120-BTi	 or
1	3-pin terminal block	
2	5-pin terminal block	
1	SATA cable (P/N: 32801-000702-100-RS)	
1	SATA power cable (P/N: 32102-010700-100-RS)	
1	DIN rail mounting bracket (50 mm x 45 mm x 8.7 mm) (P/N: 42011-0025E4-00-RS)	

Quantity	Item and Part Number	Image
Standard		
3	Mounting bracket screw	
4	Screw (for securing an PCIe Mini card)	
1	One Key Recovery CD	
1	User manual and driver CD	

The following table lists the optional items that can be purchased separately.

Optional	
Power adapter (**P/N**: 63040-010036-121-RS)	
Power cord, European standard, 1800 mm (**P/N**: 32702-000400-200-RS)	
Power cord, American standard, 1830 mm (**P/N**: 32000-000025-RS)	
Power cable, DC jack (5.5x2.5) to 3-pin terminal block, 200 mm (**P/N**: 32102-026500-100-RS)	

Optional	
Wireless kit (**P/N**: EMB-WIFI-KIT01-R11)	
DIN-Rail mounting kit (**P/N**: DK-DRPC-R10)	
Flash disk, mSATA, 2GB~32GB, 0°C ~ 70°C (**P/N**: IPE-5200IM-xxx)	
Flash disk, mSATA, 2GB~32GB, -40°C ~ 85°C (**P/N**: IPE-5200VM-xxx)	

Chapter

3

Installation

3.1 Installation Precautions

During installation, be aware of the precautions below:

- **Read the user manual**: The user manual provides a complete description of the DRPC-120-BTi, installation instructions and configuration options.
- **DANGER! Disconnect Power**: Power to the DRPC-120-BTi must be disconnected during the installation process. Failing to disconnect the power may cause severe injury to the body and/or damage to the system.
- **Qualified Personnel**: The DRPC-120-BTi must be installed and operated only by trained and qualified personnel. Maintenance, upgrades, or repairs may only be carried out by qualified personnel who are familiar with the associated dangers.
- **Air Circulation**: Make sure there is sufficient air circulation when installing the DRPC-120-BTi. The DRPC-120-BTi's cooling vents must not be obstructed by any objects. Blocking the vents can cause overheating of the DRPC-120-BTi. Leave at least 5 cm of clearance around the DRPC-120-BTi to prevent overheating.
- **Grounding**: The DRPC-120-BTi should be properly grounded. The voltage feeds must not be overloaded. Adjust the cabling and provide external overcharge protection per the electrical values indicated on the label attached to the back of the DRPC-120-BTi.

3.1.1 High Surface Temperature

WARNING:

Some surfaces of the equipment may become hot during operation.

The surface temperature may be up to several tens of degrees hotter than the ambient temperature. Under these circumstances, the equipment needs to be protected against accidental contact.

The equipment is intended for installation in a RESTRICTED ACCESS LOCATION.

- Access can only be gained by SERVICE PERSONS or by USERS who have been instructed about the reasons for the restrictions applied to the location and about any precautions that shall be taken.
- Access is through the use of a TOOL or lock and key, or other means of security, and is controlled by the authority responsible for the location.

3.2 Internal Access Panel Removal

Before installing or maintaining the internal components, the internal access panel must be removed from the DRPC-120-BTi. Follow the steps below to complete the task.

Step 1: Remove the three retention screws indicated in **Figure 3-1**.

Step 2: Slide the panel and gently lift the panel (**Figure 3-1**).

Figure 3-1: Internal Access Panel Removal

3.3 HDD Installation

WARNING:

Please install a solid state drive (SSD) when the DRPC-120-BTi is used in a harsh environment with extreme shock and vibration.

The DRPC-120-BTi allows installation of one 2.5" HDD/SSD. To install a HDD into the system, please follow the steps below.

Step 1: Remove the internal access panel from the DRPC-120-BTi. Please follow the instruction described in **Section 3.2**.

Step 2: Install the HDD into the bracket on the internal access panel, and secure the HDD with four retention screws (**Figure 3-2**).

Step 3: Connect the SATA cable and the SATA power cable to the rear of the HDD (**Figure 3-2**).

Step 4: Connect the SATA cable and the SATA power cable from the HDD to the SATA connector and SATA power connector on the motherboard (**Figure 3-2**).

Figure 3-2: HDD Installation

Step 5: Replace and secure the internal access panel to the system.

3.4 mSATA SSD Installation

The DRPC-120-BTi has one full-size PCIe Mini slot on the motherboard for mSATA SSD installation. To install the mSATA SSD, follow the instructions below.

Step 1: Remove the internal access panel from the DRPC-120-BTi. Please follow the instruction described in **Section 3.2**.

Step 2: Locate the PCIe Mini slot on the motherboard (**Figure 3-3**).

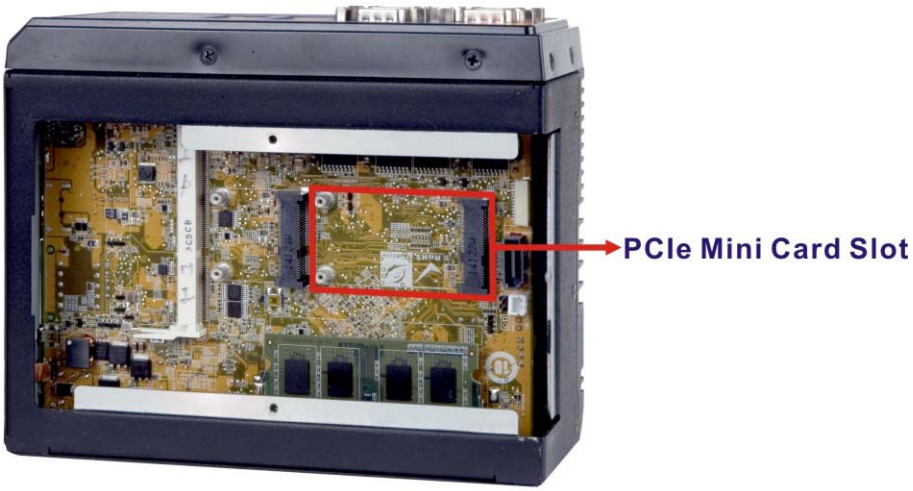

Figure 3-3: PCIe Mini Slot Location

Step 3: **Insert into the socket at an angle**. Line up the notch on the card with the notch on the connector. Slide the PCIe Mini card into the socket at an angle of about 20º (**Figure 3-4**).

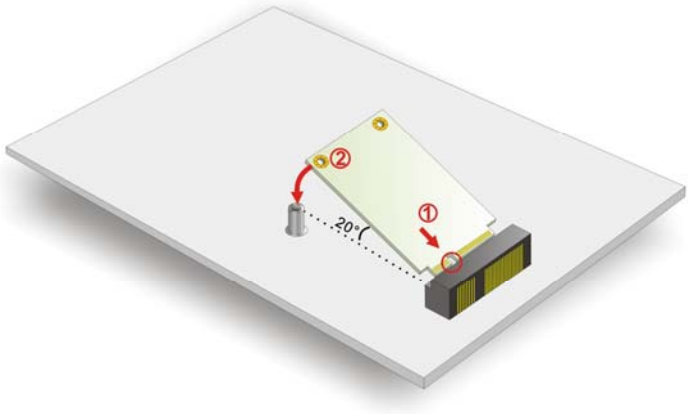

Figure 3-4: Inserting the PCIe Mini Card into the Socket

Step 4: **Secure the PCIe Mini card**. Secure the PCIe Mini card with the supplied retention screws (**Figure 3-5**).

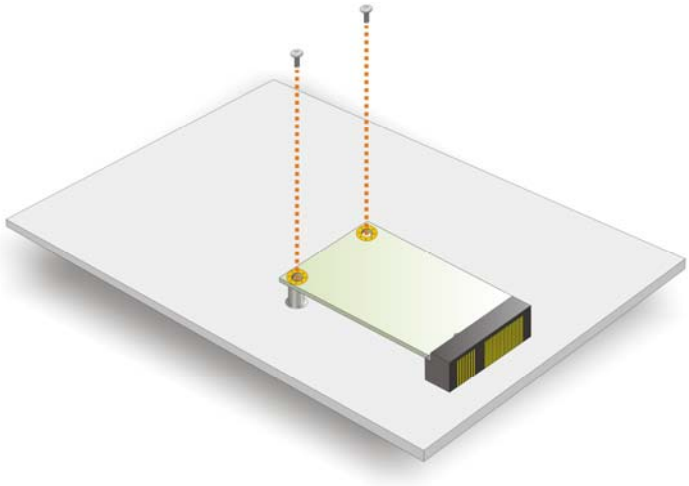

Figure 3-5: Securing the PCIe Mini Card

Step 5: Replace and secure the internal access panel to the system.

3.5 IPMI Module Installation (Optional)

NOTE:

The IPMI module slot is designed to install the IEI iRIS-2400 IPMI 2.0 module only. DO NOT install other modules into the IPMI module slot. Doing so may cause damage to the DRPC-120-BTi.

Please follow the steps below to install the iRIS-2400 module, and refer to **Section 3.10** for the setup procedure.

Step 1: Remove the internal access panel from the DRPC-120-BTi. Please follow the instruction described in **Section 3.2**.

Step 2: Locate the IPMI module slot on the motherboard (**Figure 3-3**).

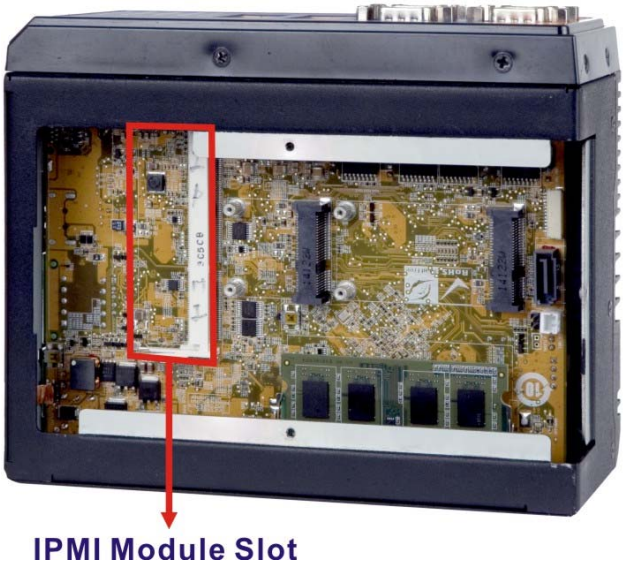

Figure 3-6: IPMI Module Slot Location

Step 3: **Align the iRIS-2400 module with the IPMI module slot**. Align the notch on the module with the notch on the IPMI module slot.

Step 4: Insert the iRIS-2400 module. Push the module in at a 20º angle (**Figure 3-7**).

Step 5: Seat the iRIS-2400 module. Gently push downwards and the arms clip into place (**Figure 3-7**).

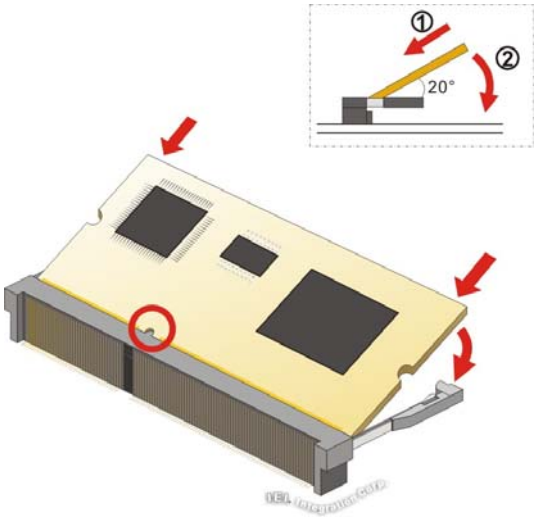

Figure 3-7: IPMI Module Installation

Step 6: Replace and secure the internal access panel to the system.

3.6 Clear CMOS

If the DRPC-120-BTi fails to boot due to improper BIOS settings, the clear CMOS button clears the CMOS data and resets the system BIOS information. To do this, push the clear CMOS button for a few seconds.

If the "CMOS Settings Wrong" message is displayed during the boot up process, the fault may be corrected by pressing the F1 to enter the CMOS Setup menu. Do one of the following:

- Enter the correct CMOS setting
- Load Optimal Defaults
- Load Failsafe Defaults.

After having done one of the above, save the changes and exit the CMOS Setup menu.

The clear CMOS button location is shown in **Figure 3-8** below.

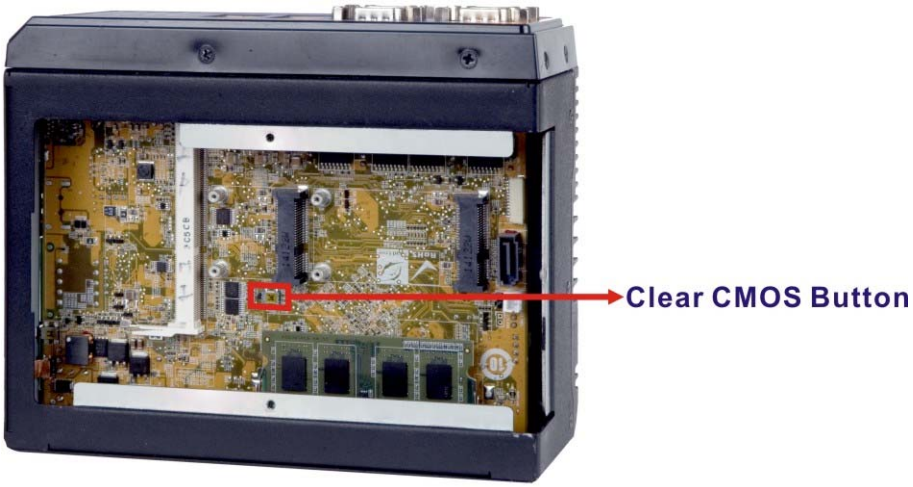

Figure 3-8: Clear CMOS Button Location

3.7 AT/ATX Mode Selection

AT and ATX power modes can both be used on the DRPC-120-BTi. The selection is made through an AT/ATX switch on the top panel as shown below (**Figure 3-9**).

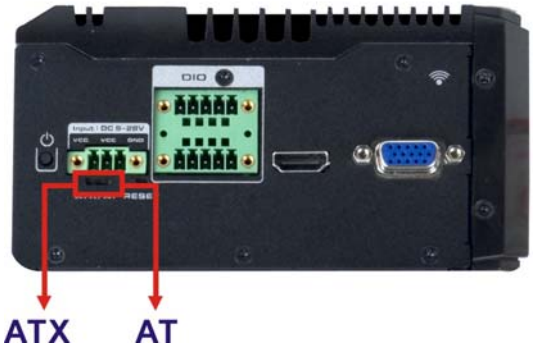

Figure 3-9: AT/ATX Switch Location

3.8 Mounting the System

The DRPC-120-BTi embedded system can be mounted onto a DIN rail. Follow the steps below to complete the task.

Step 1: Attach the supplied DIN rail mounting bracket to the rear panel of the embedded system. Secure the bracket to the embedded system with three retention screws (**Figure 3-10**).

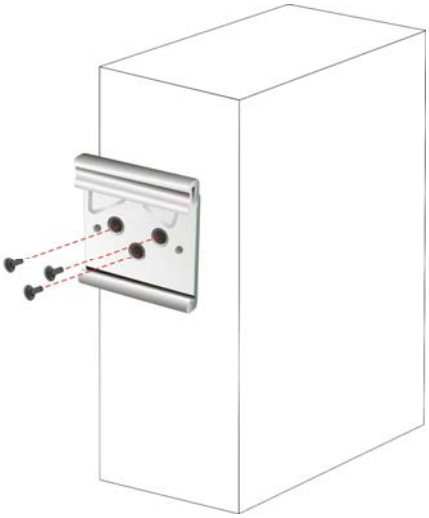

Figure 3-10: DIN Rail Mounting Bracket Installation

NOTE:

In the diagrams below, the DIN rail is already installed on a surface or on a chassis.

Step 2: Attach the upper edge of the mounting bracket to the DIN rail as shown in **Figure 3-11**.

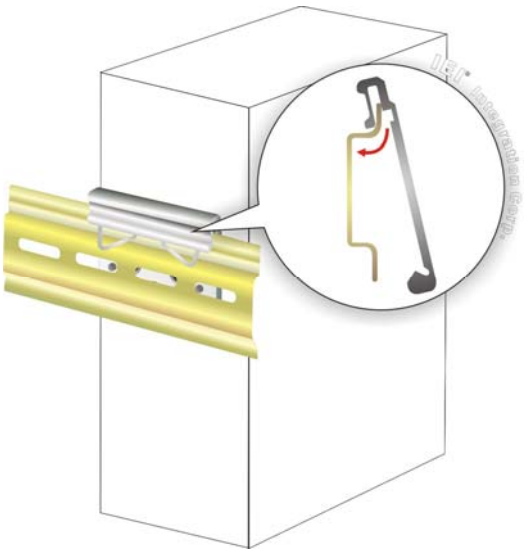

Figure 3-11: Attach the Mounting Bracket to the DIN Rail

Step 3: Push the system toward the DIN rail until the mounting bracket clips into place firmly (**Figure 3-12**).

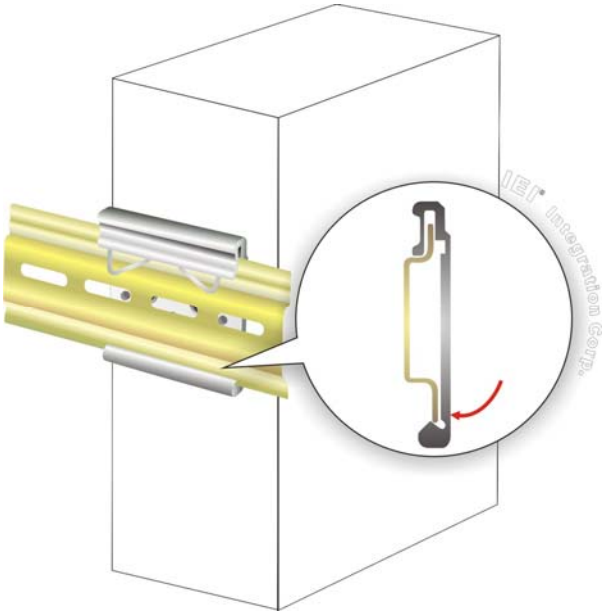

Figure 3-12: Mounting the System

3.9 External Peripheral Interface Connectors

The DRPC-120-BTi has the following connectors. Detailed descriptions of the connectors can be found in the subsections below.

- 8-bit DIO
- Ethernet
- Power input
- RS-232
- RS-422/485
- USB
- VGA
- HDMI

3.9.1 Digital Input/Output Terminal Block

CN Label: **DIO**

CN Type: Terminal block

CN Location: See **Figure 1-4**

CN Pinouts: See **Table 3-1** and **Figure 3-13**

The digital I/O terminal block provides programmable input and output for external devices. The digital I/O provides 4-bit output and 4-bit input. The pinouts for the digital I/O terminal block are listed in the table below.

Pin	Description	Pin	Description
1	DGI_0	2	DGO_0
3	DGI_1	4	DGO_1
5	DGI_2	6	DGO_2
7	DGI_3	8	DGO_3
9	Isolator GND	10	Isolator Vin

Table 3-1: DIO Terminal Block Pinouts

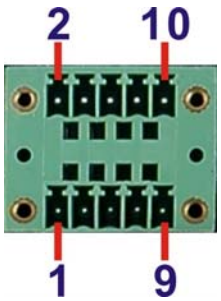

Figure 3-13: DIO Terminal Block Pinout Location

3.9.2 LAN Connectors

CN Type: RJ-45

CN Location: See **Figure 1-2**

CN Pinouts: See **Table 3-2 and Table 3-3**

The LAN connectors allow connection to an external network.

Pin	Description	Pin	Description
20	LAN1_MDI0P	24	LAN1_MDI2P
21	LAN1_MDI0N	25	LAN1_MDI2N
22	LAN1_MDI1P	26	LAN1_MDI3P
23	LAN1_MDI1N	27	LAN1_MDI3N

Table 3-2: LAN1 Pinouts

Pin	Description	Pin	Description
P2	TRD2P0	P6	TRD2P2
P3	TRD2N0	P7	TRD2N2
P4	TRD2P1	P8	TRD2P3
P5	TRD2N1	P9	TRD2N3

Table 3-3: LAN2 Pinouts

Figure 3-14: RJ-45 Ethernet Connector

The RJ-45 Ethernet connector has two status LEDs, one green and one yellow. The green LED indicates activity on the port and the yellow LED indicates the port is linked. See **Table 3-4**.

Activity/Link LED		Speed LED	
STATUS	**DESCRIPTION**	**STATUS**	**DESCRIPTION**
Off	No link	Off	10 Mbps connection
Yellow	Linked	Green	100 Mbps connection
Blinking	TX/RX activity	Orange	1 Gbps connection

Table 3-4: RJ-45 Ethernet Connector LEDs

3.9.3 Power Input, 3-pin Terminal Block

CN Type: 3-pin terminal block

CN Location: See **Figure 1-4**

CN Pinouts: See **Table 3-5** and **Figure 3-15**

Connect the leads of a 9 V ~ 28 V DC power supply (max. 36 W) into the terminal block. Make sure that the power and ground wires are attached to the correct sockets of the connector.

Pin	Description	Pin	Description
1	9V~28V input	3	GND
2	9V~28V input		

Table 3-5: 3-pin Power Terminal Block Pinouts

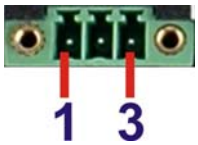

Figure 3-15: 3-pin Power Terminal Block Pinout Location

3.9.4 RS-232 Serial Port Connectors (COM1, COM2)

CN Label: **COM1** and **COM2**

CN Type: DB-9 connectors

CN Location: See **Figure 1-2**

CN Pinouts: See **Table 3-6** and **Figure 3-16**

RS-232 serial port devices can be attached to the DB-9 ports on the front panel.

Pin	Description	Pin	Description
1	DCD	6	DSR
2	RXD	7	RTS
3	TXD	8	CTS
4	DTR	9	RI
5	GND		

Table 3-6: RS-232 Serial Port Pinouts

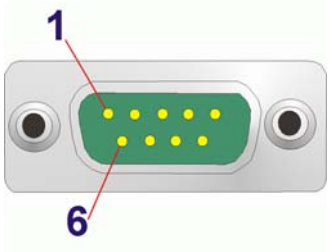

Figure 3-16: RS-232 Serial Port Pinout Location

3.9.5 RS-422/485 Serial Port Connectors (COM3, COM4)

CN Label: **COM3** and **COM4**

CN Type: DB-9 connectors

CN Location: See **Figure 1-2**

CN Pinouts: See **Table 3-7** and **Figure 3-17**

RS-422/485 serial port devices can be attached to the DB-9 ports on the front panel.

Pin	RS-422	RS-485
1	RS-422TX-	RS-485D-
2	RS-422TX+	RS-485D+
3	RS-422RX+	--
4	RS-422RX-	--
5	GND	--
6	--	--
7	--	--
8	--	--
9	--	--

Table 3-7: RS-422/485 Serial Port Pinouts

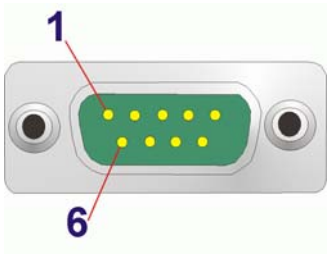

Figure 3-17: RS-422/485 Serial Port Pinout Locations

3.9.6 USB Connectors

CN Type: USB port

CN Location: See **Figure 1-2**

CN Pinouts: See **Table 3-8** and **Table 3-9**

The USB ports are for connecting USB peripheral devices to the system. The USB 2.0 and USB 3.0 connector pinouts are listed below.

Pin	Description	Pin	Description
1	VCC	5	VCC
2	DATA-	6	DATA-
3	DATA+	7	DATA+
4	GROUND	8	GROUND

Table 3-8: USB 2.0 Port (USB3/USB4) Pinouts

Pin	Description	Pin	Description
1	VCC	10	VCC
2	USB_DATA-	11	USB_DATA-
3	USB_DATA+	12	USB_ DATA+
4	GND	13	GND
5	USB3_RX-	14	USB3_RX-
6	USB3_RX+	15	USB3_ RX+
7	GND	16	GND
8	USB3_TX-	17	USB3_TX-
9	USB3_TX+	18	USB3_TX+

Table 3-9: USB 3.0 Port (USB1/USB2) Pinouts

3.9.7 VGA Connector

CN Label: **VGA**

CN Type: 15-pin Female

CN Location: See **Figure 1-4**

CN Pinouts: See **Table 3-10**

The VGA connector connects to a monitor that accepts VGA video input.

Pin	Description	Pin	Description
1	RED	2	GREEN
3	BLUE	4	NC
5	GND	6	GND
7	GND	8	GND
9	VCC	10	GND
11	NC	12	DDC DAT
13	HSYNC	14	VSYNC
15	DDCCLK		

Table 3-10: VGA Connector Pinouts

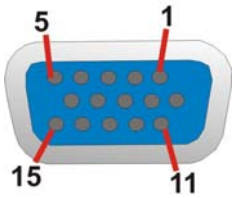

Figure 3-18: VGA Connector

3.10 IPMI Setup Procedure

The DRPC-120-BTi features Intelligent Platform Management Interface (IPMI) that helps lower the overall costs of server management by enabling users to maximize IT resource, save time and manage multiple systems. The DRPC-120-BTi supports IPMI 2.0 through the optional iRIS-2400 module. Follow the steps below to setup IPMI.

3.10.1 Managed System Hardware Setup

The hardware configuration of the managed system (DRPC-120-BTi) is described below.

Step 1: Install an iRIS-2400 module to the IPMI module socket (refer to **Section 3.5**).

Step 2: Make sure at least one DDR3 SO-DIMM is installed in one of the SO-DIMM sockets. If multiple SO-DIMMs are installed, all of the SO-DIMMs must be same size, same speed and same brand to get the best performance.

Step 3: Connect an Ethernet cable to **LAN2** RJ-45 connector (**Figure 1-2**).

3.10.2 Using the IEI iMAN Web GUI

To manage a client system from a remote console using IEI iMAN Web GUI, follow the steps below.

Step 1: Obtain the IP address of the managed system. It is recommended to use the IPMI Tool on the managed system to obtain the IP address. To use IPMI Tool to obtain IP address, follow the steps below:

a. Copy the **Ipmitool.exe** file to a bootable USB flash drive.

b. Insert the USB flash drive to the DRPC-120-BTi.

c. The DRPC-120-BTi boots from the USB flash drive.

d. Enter the following command: **ipmitool 20 30 02 01 03 00 00**
(there is a space between each two-digit number).

e. A serial of number shows. The last four two-digit hexadecimal numbers are the IP address. Convert the hexadecimal numbers to decimal numbers.

Step 2: On the remote management console, open a web browser. Enter the managed system IP address in the web browser (**Figure 3-19**).

Figure 3-19: IEI iMAN Web Address

Step 3: The login page appears in the web browser.

Step 4: Enter the user name and password to login the system. The default login username and password are:

-Username: **admin**

-Password: **admin**

Step 5: Press the login button to login the system.

Step 6: The IEI iMAN Web Interface appears.

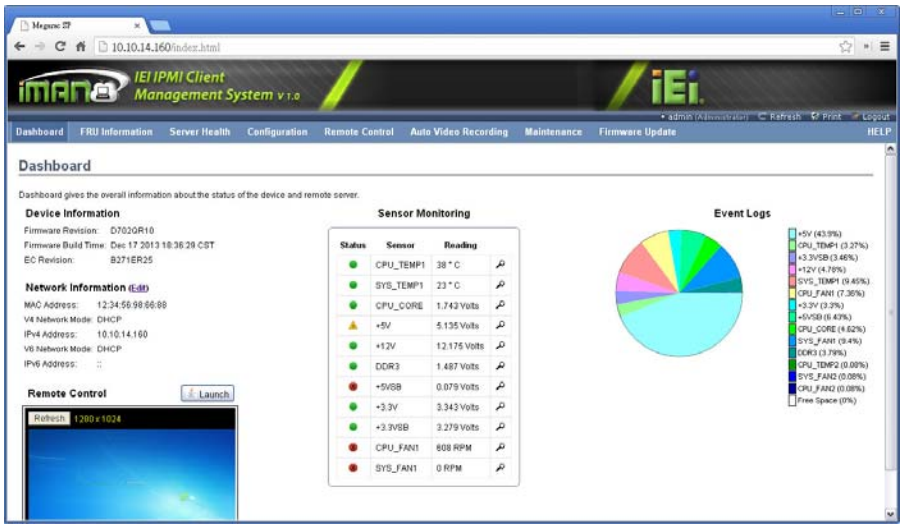

Figure 3-20: IEI iMAN Web GUI

NOTE:

To understand how to use the IEI iMAN Web GUI, please refer to the iRIS-2400 Web GUI user manual in the utility CD came with the DRPC-120-BTi. The user manual describes each function in detail.

3.11 Driver Installation

NOTE:

The content of the CD may vary throughout the life cycle of the product and is subject to change without prior notice. Visit the IEI website or contact technical support for the latest updates.

All the drivers for the DRPC-120-BTi are on the utility CD that came with the system. The utility CD contains drivers for Windows 7 and Windows 8 operating systems. Please select the corresponding drivers for the system.

The following drivers can be installed on the **Windows 7** operating system:

- Chipset
- I/O driver
- Graphics (Intel® EMGD)
- TXE
- USB 3.0
- LAN
- Audio

The following drivers can be installed on the **Windows 8** operating system:

- Chipset
- Serial I/O driver (64-bit only)
- TXE
- Graphics
- LAN
- Audio

The DRPC-120-BTi-E5-OLED also comes with two programmable OLED display utilities that allow users to program their own APIs to show information on the OLED screen in graphic and text formats. Please refer to **Chapter 6** for detailed instruction.

Chapter

4

System Maintenance

4.1 System Maintenance Introduction

The following system components may require maintenance.

- Motherboard
- SO-DIMM module

If these components fail, they must be replaced. Please contact the system reseller or vendor to purchase replacement parts. Replacement instructions for the above listed components are described below.

WARNING!

Before accessing any DRPC-120-BTi internal components, make sure all power to the system has been disconnected. Failing to do so may cause severe damage to the DRPC-120-BTi and injury to the user.

WARNING!

Please take antistatic precautions when working with the internal components. The interior of the DRPC-120-BTi contains very sensitive electronic components. These components are easily damaged by electrostatic discharge (ESD). Before working with the internal components, make sure all anti-static precautions described earlier have been observed.

4.2 Motherboard Replacement

A user cannot replace a motherboard. If the motherboard fails it must be shipped back to IEI to be replaced. If the system motherboard has failed, please contact the system vendor, reseller or an IEI sales person directly.

4.3 SO-DIMM Replacement

To install/replace the SO-DIMM modules, please follow the steps below.

Step 1: Remove the internal access panel from the DRPC-120-BTi. Please follow the instruction described in **Section 3.2**.

Step 2: Locate the SO-DIMM module on the motherboard.

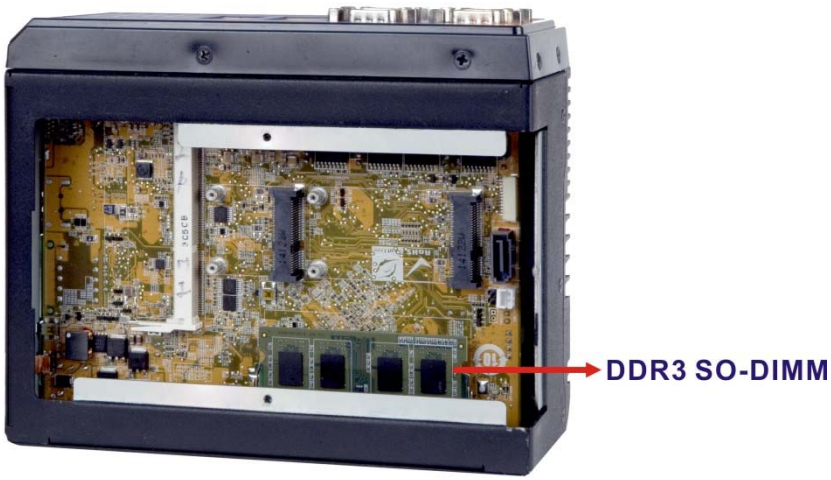

Figure 4-1: SO-DIMM Module Location

Step 3: Release the SO-DIMM module by pulling both the spring retainer clips outward from the socket.

Step 4: Grasp the SO-DIMM module by the edges and carefully pull it out of the socket.

Step 5: Install the new SO-DIMM module by pushing it into the socket at an angle (**Figure 4-2**).

Step 6: Gently push the rear of the SO-DIMM module down (**Figure 4-2**). The spring retainer clips clip into place and secure the SO-DIMM module in the socket.

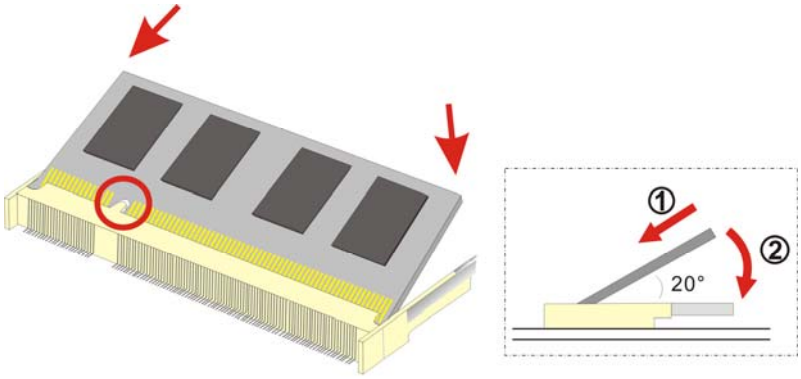

Figure 4-2: SO-DIMM Module Installation

Step 7: Push the new SO-DIMM module until it engages and the white plastic end clips click into place. Make sure the end clips are fully secured after installation.

Chapter

5

BIOS

5.1 Introduction

The BIOS is programmed onto the BIOS chip. The BIOS setup program allows changes to certain system settings. This chapter outlines the options that can be changed.

NOTE:

Some of the BIOS options may vary throughout the life cycle of the product and are subject to change without prior notice.

5.1.1 Starting Setup

The UEFI BIOS is activated when the computer is turned on. The setup program can be activated in one of two ways.

1. Press the **DEL** or **F2** key as soon as the system is turned on or
2. Press the **DEL** or **F2** key when the "**Press DEL or F2 to enter SETUP**" message appears on the screen.

If the message disappears before the **DEL or F2** key is pressed, restart the computer and try again.

5.1.2 Using Setup

Use the arrow keys to highlight items, press **ENTER** to select, use the PageUp and PageDown keys to change entries, press **F1** for help and press **Esc** to quit. Navigation keys are shown in **Table 5-1**.

Key	Function
Up arrow	Move to previous item
Down arrow	Move to next item
Left arrow	Move to the item on the left hand side
Right arrow	Move to the item on the right hand side
+	Increase the numeric value or make changes

Key	Function
-	Decrease the numeric value or make changes
Esc key	Main Menu – Quit and not save changes into CMOS Status Page Setup Menu and Option Page Setup Menu -- Exit current page and return to Main Menu
F1 key	General help, only for Status Page Setup Menu and Option Page Setup Menu
F2 key	Load previous values
F3 key	Load optimized defaults
F4 key	Save changes and exit BIOS

Table 5-1: BIOS Navigation Keys

5.1.3 Getting Help

When **F1** is pressed a small help window describing the appropriate keys to use and the possible selections for the highlighted item appears. To exit the Help Window press **Esc** or the **F1** key again.

5.1.4 Unable to Reboot after Configuration Changes

If the computer cannot boot after changes to the system configuration is made, CMOS defaults. Use the clear CMOS button described in **Chapter 3**.

5.1.5 BIOS Menu Bar

The **menu bar** on top of the BIOS screen has the following main items:

- Main – Changes the basic system configuration.
- Advanced – Changes the advanced system settings.
- Chipset – Changes the chipset settings.
- Security – Sets User and Supervisor Passwords.
- Boot – Changes the system boot configuration.
- Save & Exit – Selects exit options and loads default settings

The following sections completely describe the configuration options found in the menu items at the top of the BIOS screen and listed above.

5.2 Main

The **Main** BIOS menu (**BIOS Menu 1**) appears when the **BIOS Setup** program is entered. The **Main** menu gives an overview of the basic system information.

```
      Aptio Setup Utility – Copyright (C) 2013 American Megatrends, Inc.
  Main    Advanced   Chipset   Security    Boot    Save & Exit

BIOS Information                                  Set the Date. Use Tab to
BIOS Vendor                American Megatrends    switch between Data
Core Version               5.009                  elements.
Compliancy                 UEFI 2.3;PI1.2
Project Version            E445AT13.ROM
Build Date and Time        09/18/2014 10:57:55

iWDD Vendor                iEi
iWDD Version               E445ET18.bin

IPMI Module                N/A

CPU Configuration
Microcode Patch            901
BayTrail SoC               D0 Stepping

Memory Information                                ----------------------
Total Memory               2048 MB (LPDDR3)
                                                  ←→: Select Screen
GOP Information                                   ↑ ↓: Select Item
Intel(R) GOP Driver        [N/A]                  EnterSelect
                                                  + -: Change Opt.
TXE Information                                   F1:  General Help
Sec RC Version             00.05.00.00            F2:  Previous Values
TXE FW Version             01.00.02.1060          F3:  Optimized Defaults
                                                  F4:  Save & Exit
System Date                [Tue 01/02/2010]       ESC: Exit
System Time                [15:10:27]

      Version 2.16.1242. Copyright (C) 2013 American Megatrends, Inc.
```

BIOS Menu 1: Main

➔ BIOS Information

The **BIOS Information** lists a brief summary of the BIOS. The fields in **BIOS Information** cannot be changed. The items shown in the system overview include:

- **BIOS Vendor:** Installed BIOS vendor

- **Core Version:** Current BIOS version
- **Compliancy:** Current compliant version
- **Project Version:** the board version
- **Build Date and Time:** Date and time the current BIOS version was made
- **iWDD Vendor:** Installed embedded controller vendor
- **iWDD Version:** Current embedded controller version

➔ **IPMI Module**

The **IPMI Module** lists the installed IPMI module information.

➔ **CPU Information**

The **CPU Information** lists a brief summary of the CPU. The fields in **CPU Information** cannot be changed. The items shown in the system overview include:

- **Microcode Patch:** Installed microcode patch
- **BayTrail SoC:** CPU stepping level

➔ **Memory Information**

The **Memory Information** lists a brief summary of the system memory. The fields in **Memory Information** cannot be changed. The items shown in the system overview include:

- **Total Memory:** Current total memory of the system

➔ **GOP Information**

The **GOP Information** lists a brief summary of the Graphics Output Protocol (GOP). The fields in **GOP Information** cannot be changed. The items shown in the system overview include:

- **Intel GOP Driver:** Installed Intel GOP driver

➔ **TXE Information**

The **TXE Information** lists a brief summary of Intel® Trusted Execution Engine (TXE). The fields in **TXE Information** cannot be changed. The items shown in the system overview include:

- **Sec RC Version:** Current sec reference code version
- **TXE FW Version:** Current Intel® TXE firmware version

The System Overview field has two user configurable fields:

➔ **System Date [xx/xx/xx]**

Use the **System Date** option to set the system date. Manually enter the day, month and year.

➔ **System Time [xx:xx:xx]**

Use the **System Time** option to set the system time. Manually enter the hours, minutes and seconds.

5.3 Advanced

Use the **Advanced** menu (**BIOS Menu 2**) to configure the CPU and peripheral devices through the following sub-menus:

WARNING!

Setting the wrong values in the sections below may cause the system to malfunction. Make sure that the settings made are compatible with the hardware.

```
Aptio Setup Utility – Copyright (C) 2013 American Megatrends, Inc.
Main   Advanced   Chipset   Security   Boot   Save & Exit

> ACPI Settings                                  System ACPI Parameters
> Super IO Configuration
> iWDD H/W Monitor
> RTC Wake Settings                              ----------------------
> Serial Port Console Redirection
> CPU Configuration                              ←→: Select Screen
> IDE Configuration                              ↑ ↓: Select Item
> USB Configuration                              Enter Select
> ICP Board                                      + -   Change Opt.
                                                 F1    General Help
                                                 F2    Previous Values
                                                 F3    Optimized Defaults
                                                 F4    Save & Exit
                                                 ESC   Exit
Version 2.16.1242. Copyright (C) 2013 American Megatrends, Inc.
```

BIOS Menu 2: Advanced

5.3.1 ACPI Settings

The **ACPI Settings** menu (**BIOS Menu 3**) configures the Advanced Configuration and Power Interface (ACPI) options.

```
Aptio Setup Utility – Copyright (C) 2013 American Megatrends, Inc.
Advanced

ACPI Settings                                    Select the highest ACPI
                                                 sleep state the system
ACPI Sleep State              [S3 (Suspend to RAM)]  will enter when the
                                                 SUSPEND button is
                                                 pressed.

                                                 ----------------------

                                                 ←→: Select Screen
                                                 ↑ ↓: Select Item
                                                 Enter Select
                                                 + -   Change Opt.
                                                 F1    General Help
                                                 F2    Previous Values
                                                 F3    Optimized Defaults
                                                 F4    Save & Exit
                                                 ESC   Exit
Version 2.16.1242. Copyright (C) 2013 American Megatrends, Inc.
```

BIOS Menu 3: ACPI Configuration

➔ **ACPI Sleep State [S3 (Suspend to RAM)]**

Use the **ACPI Sleep State** option to specify the sleep state the system enters when it is not being used.

➔ **S3 (Suspend to RAM)**	The caches are flushed and the CPU is powered off. Power to the RAM is maintained. The computer returns slower to a working state, but more power is saved.
DEFAULT	

5.3.2 Super IO Configuration

Use the **Super IO Configuration** menu (**BIOS Menu 4**) to set or change the configurations for the serial ports.

```
Aptio Setup Utility – Copyright (C) 2013 American Megatrends, Inc.
Advanced

F81866 Super IO Configuration                    Set Parameters of Serial
                                                 Port 1 (COMA)
F81866 Super IO Chip            F81866
> Serial Port 1 Configuration
> Serial Port 2 Configuration                    ---------------------
> Serial Port 3 Configuration                    ←→: Select Screen
> Serial Port 4 Configuration                    ↑ ↓: Select Item
                                                 EnterSelect
                                                 + -   Change Opt.
                                                 F1    General Help
                                                 F2    Previous Values
                                                 F3    Optimized Defaults
                                                 F4    Save & Exit
                                                 ESC   Exit
Version 2.16.1242. Copyright (C) 2013 American Megatrends, Inc.
```

BIOS Menu 4: Super IO Configuration

5.3.2.1 Serial Port n Configuration

Use the **Serial Port n Configuration** menu (**BIOS Menu 5**) to configure the serial port n.

```
Aptio Setup Utility – Copyright (C) 2013 American Megatrends, Inc.
Advanced

Serial Port n Configuration                    Enable or Disable Serial
                                               Port (COM)
Serial Port                  [Enabled]
Device Settings              IO=3F8h;IRQ=4
                                               ---------------------
Change Settings              [Auto]            ←→: Select Screen
                                               ↑ ↓: Select Item
                                               EnterSelect
                                               = -   Change Opt.
                                               F1    General Help
                                               F2    Previous Values
                                               F3    Optimized Defaults
                                               F4    Save & Exit
                                               ESC   Exit
Version 2.16.1242. Copyright (C) 2013 American Megatrends, Inc.
```

BIOS Menu 5: Serial Port n Configuration Menu

5.3.2.1.1 Serial Port 1 Configuration

➔ **Serial Port [Enabled]**

Use the **Serial Port** option to enable or disable the serial port.

➔ **Disabled**		Disable the serial port
➔ **Enabled**	**DEFAULT**	Enable the serial port

➔ **Change Settings [Auto]**

Use the **Change Settings** option to change the serial port IO port address and interrupt address.

➔ **Auto**	**DEFAULT**	The serial port IO port address and interrupt address are automatically detected.
➔ **IO=3F8h; IRQ=4**		Serial Port I/O port address is 3F8h and the interrupt address is IRQ4

- **IO=3F8h; IRQ=3, 4, 5, 6, 7, 9, 10, 11, 12** — Serial Port I/O port address is 3F8h and the interrupt address is IRQ3, 4, 5, 6, 7, 9, 10, 11, 12
- **IO=2F8h; IRQ=3, 4, 5, 6, 7, 9, 10, 11, 12** — Serial Port I/O port address is 2F8h and the interrupt address is IRQ3, 4, 5, 6, 7, 9, 10, 11, 12
- **IO=3E8h; IRQ=3, 4, 5, 6, 7, 9, 10, 11, 12** — Serial Port I/O port address is 3E8h and the interrupt address is IRQ3, 4, 5, 6, 7, 9, 10, 11, 12
- **IO=2E8h; IRQ=3, 4, 5, 6, 7, 9, 10, 11, 12** — Serial Port I/O port address is 2E8h and the interrupt address is IRQ3, 4, 5, 6, 7, 9, 10, 11, 12

5.3.2.1.2 Serial Port 2 Configuration

➔ **Serial Port [Enabled]**

Use the **Serial Port** option to enable or disable the serial port.

- **Disabled** — Disable the serial port
- **Enabled** DEFAULT — Enable the serial port

➔ **Change Settings [Auto]**

Use the **Change Settings** option to change the serial port IO port address and interrupt address.

- **Auto** DEFAULT — The serial port IO port address and interrupt address are automatically detected.

➔ **IO=2F8h; IRQ=3**	Serial Port I/O port address is 2F8h and the interrupt address is IRQ3
➔ **IO=3F8h; IRQ=3, 4, 5, 6, 7, 9, 10, 11, 12**	Serial Port I/O port address is 3F8h and the interrupt address is IRQ3, 4, 5, 6, 7, 9, 10, 11, 12
➔ **IO=2F8h; IRQ=3, 4, 5, 6, 7, 9, 10, 11, 12**	Serial Port I/O port address is 2F8h and the interrupt address is IRQ3, 4, 5, 6, 7, 9, 10, 11, 12
➔ **IO=3E8h; IRQ=3, 4, 5, 6, 7, 9, 10, 11, 12**	Serial Port I/O port address is 3E8h and the interrupt address is IRQ3, 4, 5, 6, 7, 9, 10, 11, 12
➔ **IO=2E8h; IRQ=3, 4, 5, 6, 7, 9, 10, 11, 12**	Serial Port I/O port address is 2E8h and the interrupt address is IRQ3, 4, 5, 6, 7, 9, 10, 11, 12

5.3.2.1.3 Serial Port 3 Configuration

➔ **Serial Port [Enabled]**

Use the **Serial Port** option to enable or disable the serial port.

➔ **Disabled**		Disable the serial port
➔ **Enabled**	**DEFAULT**	Enable the serial port

➔ **Change Settings [Auto]**

Use the **Change Settings** option to change the serial port IO port address and interrupt address.

➔ **Auto**	**DEFAULT**	The serial port IO port address and interrupt address are automatically detected.
➔ **IO=3E8h; IRQ=7**		Serial Port I/O port address is 3E8h and the interrupt address is IRQ7
➔ **IO=3F8h; IRQ=3, 4, 5, 6, 7, 9, 10, 11, 12**		Serial Port I/O port address is 3F8h and the interrupt address is IRQ3, 4, 5, 6, 7, 9, 10, 11, 12
➔ **IO=2F8h; IRQ=3, 4, 5, 6, 7, 9, 10, 11, 12**		Serial Port I/O port address is 2F8h and the interrupt address is IRQ3, 4, 5, 6, 7, 9, 10, 11, 12
➔ **IO=3E8h; IRQ=3, 4, 5, 6, 7, 9, 10, 11, 12**		Serial Port I/O port address is 3E8h and the interrupt address is IRQ3, 4, 5, 6, 7, 9, 10, 11, 12
➔ **IO=2E8h; IRQ=3, 4, 5, 6, 7, 9, 10, 11, 12**		Serial Port I/O port address is 2E8h and the interrupt address is IRQ3, 4, 5, 6, 7, 9, 10, 11, 12
➔ **IO=2F0h; IRQ=3, 4, 5, 6, 7, 9, 10, 11, 12**		Serial Port I/O port address is 2F0h and the interrupt address is IRQ3, 4, 5, 6, 7, 9, 10, 11, 12
➔ **IO=2E0h; IRQ=3, 4, 5, 6, 7, 9, 10, 11, 12**		Serial Port I/O port address is 2E0h and the interrupt address is IRQ3, 4, 5, 6, 7, 9, 10, 11, 12

5.3.2.1.4 Serial Port 4 Configuration

➔ **Serial Port [Enabled]**

Use the **Serial Port** option to enable or disable the serial port.

➔ **Disabled**		Disable the serial port
➔ **Enabled**	**DEFAULT**	Enable the serial port

➔ **Change Settings [Auto]**

Use the **Change Settings** option to change the serial port IO port address and interrupt address.

➔ **Auto**	**DEFAULT**	The serial port IO port address and interrupt address are automatically detected.
➔ **IO=2E8h; IRQ=7**		Serial Port I/O port address is 2E8h and the interrupt address is IRQ7
➔ **IO=3F8h; IRQ=3, 4, 5, 6, 7, 9, 10, 11, 12**		Serial Port I/O port address is 3F8h and the interrupt address is IRQ3, 4, 5, 6, 7, 9, 10, 11, 12
➔ **IO=2F8h; IRQ=3, 4, 5, 6, 7, 9, 10, 11, 12**		Serial Port I/O port address is 2F8h and the interrupt address is IRQ3, 4, 5, 6, 7, 9, 10, 11, 12
➔ **IO=3E8h; IRQ=3, 4, 5, 6, 7, 9, 10, 11, 12**		Serial Port I/O port address is 3E8h and the interrupt address is IRQ3, 4, 5, 6, 7, 9, 10, 11, 12
➔ **IO=2E8h; IRQ=3, 4, 5, 6, 7, 9, 10, 11, 12**		Serial Port I/O port address is 2E8h and the interrupt address is IRQ3, 4, 5, 6, 7, 9, 10, 11, 12

➔ **IO=2F0h; IRQ=3, 4, 5, 6, 7, 9, 10, 11, 12** — Serial Port I/O port address is 2F0h and the interrupt address is IRQ3, 4, 5, 6, 7, 9, 10, 11, 12

➔ **IO=2E0h; IRQ=3, 4, 5, 6, 7, 9, 10, 11, 12** — Serial Port I/O port address is 2E0h and the interrupt address is IRQ3, 4, 5, 6, 7, 9, 10, 11, 12

5.3.3 iWDD H/W Monitor

The **iWDD H/W Monitor** menu (**BIOS Menu 6**) contains the fan configuration submenus and displays operating temperature and system voltages.

```
Aptio Setup Utility – Copyright (C) 2013 American Megatrends, Inc.
Advanced

PC Health Status                                  Smart Fan Mode Select

CPU temperature                  :+43 °C
System temperature               :+39 °C

CPU_FAN1 Speed                   :N/A

                                                  ---------------------
CPU_CORE                         :+0.886 V        ←→: Select Screen
+5V                              :+4.968 V        ↑ ↓: Select Item
+V12                             :+11.866 V       EnterSelect
+DDR                             :+1.342 V        + -   Change Opt.
+5VSB                            :+4.953 V        F1    General Help
+3.3V                            :+3.291 V        F2    Previous Values
+3.3VSB                          :+3.271 V        F3    Optimized Defaults
                                                  F4    Save & Exit
> Smart Fan Mode Configuration                    ESC   Exit

Version 2.16.1242. Copyright (C) 2013 American Megatrends, Inc.
```

BIOS Menu 6: iWDD H/W Monitor

➔ **PC Health Status**

The following system parameters and values are shown. The system parameters that are monitored are:

- System Temperatures:
  - CPU Temperature
  - System Temperature
- Fan Speed:
  - CPU Fan
- Voltages:
  - CPU_CORE
  - +5V
  - +V12
  - +DDR
  - +5VSB
  - +3.3V
  - +3.3VSB

5.3.3.1 Smart Fan Mode Configuration

Use the **Smart Fan Mode Configuration** submenu (**BIOS Menu 7**) to configure smart fan temperature and speed settings.

```
Aptio Setup Utility – Copyright (C) 2013 American Megatrends, Inc.
Advanced

Smart Fan Mode Configuration                          Smart Fan Mode Select

CPU_FAN1 Smart Fan Control          [Auto Mode]
Auto mode fan start temperature     50
Auto mode fan off temperature       40
Auto mode fan start PWM             30
Auto mode fan slope PWM             1

                                                      ---------------------
                                                      ←→: Select Screen
                                                      ↑ ↓: Select Item
                                                      EnterSelect
                                                      + -   Change Opt.
                                                      F1    General Help
                                                      F2    Previous Values
                                                      F3    Optimized Defaults
                                                      F4    Save & Exit
                                                      ESC   Exit
Version 2.16.1242. Copyright (C) 2013 American Megatrends, Inc.
```

BIOS Menu 7: Smart Fan Mode Configuration

➔ **CPU Smart Fan Control [Auto PWM Mode]**

Use the **CPU Smart Fan Control** option to configure the CPU smart fan.

➔ **Manual Mode**		The fan spins at the speed set in Manual Mode settings.
➔ **Auto Mode**	**DEFAULT**	The fan adjusts its speed using Auto Mode settings.

➔ **Auto mode fan start temperature**

Use the + or – key to change the **Auto mode fan start temperature** value. Enter a decimal number between 1 and 100.

➔ **Auto mode fan off temperature**

Use the + or – key to change the **Auto mode fan off temperature** value. Enter a decimal number between 1 and 100.

➔ **Auto mode fan start PWM**

Use the + or – key to change the **Auto mode fan start PWM** value. Enter a decimal number between 1 and 100.

➔ **Auto mode fan slope PWM**

Use the + or – key to change the **Auto mode fan slope PWM** value. Enter a decimal number between 1 and 64.

5.3.4 RTC Wake Settings

The **RTC Wake Settings** menu (**BIOS Menu 8**) configures RTC wake event.

```
Aptio Setup Utility – Copyright (C) 2013 American Megatrends, Inc.
Advanced

Wake System with Fixed Time      [Disabled]        Enables or Disables
                                                   system wake on alarm
                                                   event. When enabled,
                                                   system will wake on the
                                                   date: hr: min: sec
                                                   specified.

                                                   ----------------------

                                                   ←→: Select Screen
                                                   ↑ ↓: Select Item
                                                   EnterSelect
                                                   + -   Change Opt.
                                                   F1    General Help
                                                   F2    Previous Values
                                                   F3    Optimized Defaults
                                                   F4    Save & Exit
                                                   ESC   Exit
Version 2.16.1242. Copyright (C) 2013 American Megatrends, Inc.
```

BIOS Menu 8: RTC Wake Settings

➔ **Wake System with Fixed Time [Disabled]**

Use the **Wake System with Fixed Time** option to specify the time the system should be roused from a suspended state.

➔ **Disabled** **DEFAULT** The real time clock (RTC) cannot generate a wake event

➔ **Enabled**

If selected, the following appears with values that can be selected:

*Wake up every day

*Wake up date

*Wake up hour

*Wake up minute

*Wake up second

After setting the alarm, the computer turns itself on from a suspend state when the alarm goes off.

5.3.5 Serial Port Console Redirection

The **Serial Port Console Redirection** menu (**BIOS Menu 9**) allows the console redirection options to be configured. Console redirection allows users to maintain a system remotely by re-directing keyboard input and text output through the serial port.

```
Aptio Setup Utility – Copyright (C) 2013 American Megatrends, Inc.
Advanced

 COM1                                          Console Redirection
 Console Redirection          [Disabled]       Enable or Disable
> Console Redirection Settings

 COM2
 Console Redirection          [Disabled]
> Console Redirection Settings

 COM3
 Console Redirection          [Disabled]
> Console Redirection Settings

 COM4
 Console Redirection          [Disabled]       ---------------------
> Console Redirection Settings                  ←→: Select Screen
                                                ↑ ↓: Select Item
 COM5 (BMC)                                     EnterSelect
 Console Redirection          [Disabled]        +/-: Change Opt.
> Console Redirection Settings                  F1   General Help
                                                F2   Previous Values
                                                F3   Optimized Defaults
                                                F4   Save & Exit
                                                ESC  Exit
Version 2.16.1242. Copyright (C) 2013 American Megatrends, Inc.
```

BIOS Menu 9: Serial Port Console Redirection

➔ **Console Redirection [Disabled]**

Use **Console Redirection** option to enable or disable the console redirection function.

➔ **Disabled**	DEFAULT	Disabled the console redirection function
➔ **Enabled**		Enabled the console redirection function

The following options are available in the **Console Redirection Settings** submenu when the Console Redirection option is enabled.

➔ **Terminal Type [ANSI]**

Use the **Terminal Type** option to specify the remote terminal type.

➔ **VT100**		The target terminal type is VT100
➔ **VT100+**		The target terminal type is VT100+
➔ **VT-UTF8**		The target terminal type is VT-UTF8
➔ **ANSI**	DEFAULT	The target terminal type is ANSI

➔ **Bits per second [115200]**

Use the **Bits per second** option to specify the serial port transmission speed. The speed must match the other side. Long or noisy lines may require lower speeds.

➔ **9600**		Sets the serial port transmission speed at 9600.
➔ **19200**		Sets the serial port transmission speed at 19200.
➔ **38400**		Sets the serial port transmission speed at 38400.
➔ **57600**		Sets the serial port transmission speed at 57600.
➔ **115200**	DEFAULT	Sets the serial port transmission speed at 115200.

➔ **Data Bits [8]**

Use the **Data Bits** option to specify the number of data bits.

➔ **7**	Sets the data bits at 7.

- **8** DEFAULT Sets the data bits at 8.

- **Parity [None]**

Use the **Parity** option to specify the parity bit that can be sent with the data bits for detecting the transmission errors.

- **None** DEFAULT No parity bit is sent with the data bits.
- **Even** The parity bit is 0 if the number of ones in the data bits is even.
- **Odd** The parity bit is 0 if the number of ones in the data bits is odd.
- **Mark** The parity bit is always 1. This option does not provide error detection.
- **Space** The parity bit is always 0. This option does not provide error detection.

- **Stop Bits [1]**

Use the **Stop Bits** option to specify the number of stop bits used to indicate the end of a serial data packet. Communication with slow devices may require more than 1 stop bit.

- **1** DEFAULT Sets the number of stop bits at 1.
- **2** Sets the number of stop bits at 2.

5.3.6 CPU Configuration

Use the **CPU Configuration** BIOS menu (**BIOS Menu 10**) to view detailed CPU specifications and configure the CPU.

```
Aptio Setup Utility – Copyright (C) 2013 American Megatrends, Inc.
Advanced

CPU Configuration                                  Number enabled, a VMM can
                                                   utilize the additional
Intel(R) Celeron(R) CPU E3845 @ 1.91GHz            hardware capabilities
CPU Signature                    30679             provided by Vanderpool
Microcode Patch                  901               Technology.
Max CPU Speed                    1910 MHz
Min CPU Speed                    500 MHz
Processor Cores                  4
Intel HT Technology              Not Supported
Intel VT-x Technology            Supported
                                                   ----------------------
L1 Data Cache                    24 kB x 4
L1 Code Cache                    32 kB x 4         ←→: Select Screen
L2 Cache                         1024 kB x 2       ↑ ↓: Select Item
L3 Cache                         Not Present       EnterSelect
64-bit                           Supported         + -   Change Opt.
                                                   F1    General Help
Intel Virtualization Technology  [Enabled]         F2    Previous Values
EIST                             [Enabled]         F3    Optimized Defaults
                                                   F4    Save & Exit
                                                   ESC   Exit
Version 2.16.1242. Copyright (C) 2013 American Megatrends, Inc.
```

BIOS Menu 10: CPU Configuration

The CPU Configuration menu (**BIOS Menu 10**) lists the following CPU details:

- CPU Signature: Lists the CPU signature value.
- Microcode Patch: Lists the microcode patch being used.
- Max CPU Speed: Lists the maximum CPU processing speed.
- Min CPU Speed: Lists the minimum CPU processing speed.
- Processor Cores: Lists the number of the processor core
- Intel HT Technology: Indicates if Intel HT Technology is supported by the CPU.
- Intel VT-x Technology: Indicates if Intel VT-x Technology is supported by the CPU.
- L1 Data Cache: Lists the amount of data storage space on the L1 cache.
- L1 Code Cache: Lists the amount of code storage space on the L1 cache.
- L2 Cache: Lists the amount of storage space on the L2 cache.
- L3 Cache: Lists the amount of storage space on the L3 cache.

➔ **Intel Virtualization Technology [Enabled]**

Use the **Intel Virtualization Technology** option to enable or disable virtualization on the system. When combined with third party software, Intel® Virtualization technology allows several OSs to run on the same system at the same time.

➔ **Disabled**		Disables Intel Virtualization Technology.
➔ **Enabled**	**DEFAULT**	Enables Intel Virtualization Technology.

➔ **EIST [Enabled]**

Use the **EIST** option to enable or disable Enhanced Intel SpeedStep® Technology (EIST).

➔ **Disabled**		Disables Enhanced Intel SpeedStep® Technology.
➔ **Enabled**	**DEFAULT**	Enables Enhanced Intel SpeedStep® Technology.

5.3.7 IDE Configuration

Use the **IDE Configuration** menu (**BIOS Menu 11**) to change and/or set the configuration of the SATA devices installed in the system.

```
Aptio Setup Utility – Copyright (C) 2013 American Megatrends, Inc.
Advanced

IDE Configuration                                   Select IDE / AHCI

Serial-ATA (SATA)                [Enabled]
SATA Mode                        [IDE Mode]         ---------------------

SATA Port1                                          ←→: Select Screen
Not Present                                         ↑ ↓: Select Item
                                                    EnterSelect
SATA Port2                                          + -   Change Opt.
Not Present                                         F1    General Help
                                                    F2    Previous Values
                                                    F3    Optimized Defaults
                                                    F4    Save & Exit
                                                    ESC   Exit
Version 2.16.1242. Copyright (C) 2013 American Megatrends, Inc.
```

BIOS Menu 11: IDE Configuration

➔ **Serial-ATA (SATA) [Enabled]**

Use the **Serial-ATA (SATA)** option to enable or disable the serial ATA port.

➔ **Enabled**	**DEFAULT**	Enables the SATA port.
➔ **Disabled**		Disables the SATA port.

➔ **SATA Mode [IDE Mode]**

Use the **SATA Mode** option to configure SATA devices as normal IDE devices.

➔ **IDE Mode**	**DEFAULT**	Configures SATA devices as normal IDE device.
➔ **AHCI Mode**		Configures SATA devices as AHCI device.

5.3.8 USB Configuration

Use the **USB Configuration** menu (**BIOS Menu 12**) to read USB configuration information and configure the USB settings.

```
Aptio Setup Utility – Copyright (C) 2013 American Megatrends, Inc.
Advanced

USB Configuration                                   Enables Legacy USB
                                                    support. AUTO option
USB Devices:                                        disables legacy support
      1 Keyboard, 2 Hubs                            if no USB devices are
                                                    connected. DISABLE
Legacy USB Support              [Enabled]           option will keep USB
                                                    devices available only
                                                    for EFI applications.

                                                    ---------------------
                                                    ←→: Select Screen
                                                    ↑ ↓: Select Item
                                                    EnterSelect
                                                    + -   Change Opt.
                                                    F1    General Help
                                                    F2    Previous Values
                                                    F3    Optimized Defaults
                                                    F4    Save & Exit
                                                    ESC   Exit
Version 2.16.1242. Copyright (C) 2013 American Megatrends, Inc.
```

BIOS Menu 12: USB Configuration

➔ **USB Devices**

The **USB Devices Enabled** field lists the USB devices that are enabled on the system

➔ **Legacy USB Support [Enabled]**

Use the **Legacy USB Support** BIOS option to enable USB mouse and USB keyboard support. Normally if this option is not enabled, any attached USB mouse or USB keyboard does not become available until a USB compatible operating system is fully booted with all USB drivers loaded. When this option is enabled, any attached USB mouse or USB keyboard can control the system even when there is no USB driver loaded onto the system.

➔ **Enabled** **DEFAULT** Legacy USB support enabled

- **Disabled** — Legacy USB support disabled
- **Auto** — Legacy USB support disabled if no USB devices are connected

5.4 Chipset

Use the **Chipset** menu (**BIOS Menu 13**) to access the North Bridge and South Bridge subsystem configuration menus.

WARNING!

Setting the wrong values for the Chipset BIOS selections in the Chipset BIOS menu may cause the system to malfunction.

```
      Aptio Setup Utility – Copyright (C) 2013 American Megatrends, Inc.
  Main    Advanced  Chipset  Security    Boot    Save & Exit

> North Bridge                                   North Bridge Parameters.
> South Bridge

                                                 ---------------------
                                                 ←→: Select Screen
                                                 ↑ ↓: Select Item
                                                 Enter Select
                                                 + -   Change Opt.
                                                 F1    General Help
                                                 F2    Previous Values
                                                 F3    Optimized Defaults
                                                 F4    Save & Exit
                                                 ESC   Exit

        Version 2.16.1242. Copyright (C) 2013 American Megatrends, Inc.
```

BIOS Menu 13: Chipset

5.4.1 North Bridge

Use the **North Bridge** menu (**BIOS Menu 14**) to configure the north bridge parameters.

```
Aptio Setup Utility – Copyright (C) 2013 American Megatrends, Inc.
                    Chipset

Memory Information

Total Memory                    2048 MB (LPDDR3)

DIMM1                           2048 MB (LPDDR3)

                                                    ---------------------
                                                    ←→: Select Screen
                                                    ↑ ↓: Select Item
                                                    EnterSelect
                                                    + -   Change Opt.
                                                    F1    General Help
                                                    F2    Previous Values
                                                    F3    Optimized Defaults
                                                    F4    Save & Exit
                                                    ESC   Exit
Version 2.16.1242. Copyright (C) 2013 American Megatrends, Inc.
```

BIOS Menu 14: North Bridge

5.4.2 South Bridge

Use the **South Bridge** menu (**BIOS Menu 15**) to configure the south bridge parameters.

```
Aptio Setup Utility – Copyright (C) 2013 American Megatrends, Inc.
                    Chipset

Auto Power Button Function      [Disabled (ATX)]     Select AC power state
                                                     when power is re-applied
Restore AC Power Loss           [Last State]         after a power failure.

> PCI Express Configuration

Audio Configuration                                  ---------------------
Audio Controller                [Enabled]            ←→: Select Screen
                                                     ↑ ↓: Select Item
USB Configuration                                    EnterSelect
USB 2.0(EHCI) Support           [Disabled]           + -   Change Opt.
XHCI Mode                       [Smart Auto]         F1    General Help
                                                     F2    Previous Values
                                                     F3    Optimized Defaults
                                                     F4    Save & Exit
                                                     ESC   Exit
Version 2.16.1242. Copyright (C) 2013 American Megatrends, Inc.
```

BIOS Menu 15: South Bridge

➔ **Restore on AC Power Loss [Last State]**

Use the **Restore on AC Power Loss** BIOS option to specify what state the system returns to if there is a sudden loss of power to the system.

➔ **Power Off**		The system remains turned off
➔ **Power On**		The system turns on
➔ **Last State**	**DEFAULT**	The system returns to its previous state. If it was on, it turns itself on. If it was off, it remains off.

➔ **Audio Controller [Enabled]**

Use the **Audio Controller** BIOS option to enable or disable the High Definition Audio controller.

➔ **Disabled**		The High Definition Audio controller is disabled.
➔ **Enabled**	**DEFAULT**	The High Definition Audio controller is enabled.

➔ **XHCI Mode [Smart Auto]**

Use the **XHCI Mode** BIOS option to configure the USB xHCI (USB 3.0) controller.

➔ **Enabled**		Enable the xHCI controller. USB 3.0 ports behave as USB 3.0 ports.
➔ **Smart Auto**	**DEFAULT**	Allow the use of USB 3.0 devices prior to OS boot. USB 3.0 ports function as USB 3.0 ports even during a reboot.

5.4.2.1 PCI Express Configuration

Use the **PCI Express Configuration** submenu (**BIOS Menu 16**) to configure the PCI Express slots.

```
Aptio Setup Utility – Copyright (C) 2013 American Megatrends, Inc.
                    Chipset

PCI Express Configuration                  Enable or Disable the PCI
PCI Express Port 2              [Enabled]  Express Port 2 in the
  Speed                         [Auto]     Chipset.

                                           ---------------------
                                           ←→: Select Screen
                                           ↑ ↓: Select Item
                                           EnterSelect
                                           + -   Change Opt.
                                           F1    General Help
                                           F2    Previous Values
                                           F3    Optimized Defaults
                                           F4    Save & Exit
                                           ESC   Exit
Version 2.16.1242. Copyright (C) 2013 American Megatrends, Inc.
```

BIOS Menu 16: PCI Express Configuration

➔ **PCI Express Port 2 [Enabled]**

Use the **PCI Express Port 2** option to enable or disable the corresponding PCIe slot.

➔ **Enabled** **DEFAULT** The PCIe slot is enabled.

➔ **Disabled** The PCIe slot is disabled.

➔ **Speed [Auto]**

Use the **Speed** option to configure the speed of the corresponding PCIe slot.

- Auto **DEFAULT**
- Gen 2
- Gen 1

5.5 Security

Use the **Security** menu (**BIOS Menu 17**) to set system and user passwords.

```
      Aptio Setup Utility – Copyright (C) 2013 American Megatrends, Inc.
  Main    Advanced   Chipset   Security    Boot    Save & Exit

Password Description                                  Set Administrator
                                                      Password
If ONLY the Administrator's password is set,
then this only limits access to Setup and is
only asked for when entering Setup.                   ---------------------
If ONLY the User's password is set, then this         ←→: Select Screen
is a power on password and must be entered to         ↑ ↓: Select Item
boot or enter Setup. In Setup the User will           EnterSelect
have Administrator rights.                            + -   Change Opt.
The password must be                                  F1    General Help
In the following range:                               F2    Previous Values
Maximum length                  3                     F3    Optimized Defaults
Minimum length                  20                    F4    Save & Exit
                                                      ESC   Exit
Administrator Password
User Password
        Version 2.16.1242. Copyright (C) 2013 American Megatrends, Inc.
```

BIOS Menu 17: Security

➔ **Administrator Password**

Use the **Administrator Password** to set or change an administrator password.

➔ **User Password**

Use the **User Password** to set or change a user password.

5.6 Boot

Use the **Boot** menu (**BIOS Menu 18**) to configure system boot options.

```
      Aptio Setup Utility – Copyright (C) 2013 American Megatrends, Inc.
  Main    Advanced   Chipset   Security   Boot    Save & Exit

Boot Configuration                                  Select the keyboard
Bootup NumLock State            [On]                NumLock state
Quiet Boot                      [Enabled]
UEFI Boot                       [Disabled]
                                                    ---------------------
Launch PXE OpROM                [Disabled]          ←→: Select Screen
Option ROM Messages             [Force BIOS]        ↑ ↓: Select Item
                                                    EnterSelect
                                                    + -   Change Opt.
Boot Option Priorities                              F1    General Help
                                                    F2    Previous Values
                                                    F3    Optimized Defaults
                                                    F4    Save & Exit
                                                    ESC   Exit
        Version 2.16.1242. Copyright (C) 2013 American Megatrends, Inc.
```

BIOS Menu 18: Boot

➔ **Bootup NumLock State [On]**

Use the **Bootup NumLock State** BIOS option to specify if the number lock setting must be modified during boot up.

➔ **On** **DEFAULT** Allows the Number Lock on the keyboard to be enabled automatically when the computer system boots up. This allows the immediate use of the 10-key numeric keypad located on the right side of the keyboard. To confirm this, the Number Lock LED light on the keyboard is lit.

➔ **Off** Does not enable the keyboard Number Lock automatically. To use the 10-keys on the keyboard, press the Number Lock key located on the upper left-hand corner of the 10-key pad. The Number Lock LED on the keyboard lights up when the Number Lock is engaged.

➔ **Quiet Boot [Enabled]**

Use the **Quiet Boot** BIOS option to select the screen display when the system boots.

➔ **Disabled**		Normal POST messages displayed
➔ **Enabled**	**DEFAULT**	OEM Logo displayed instead of POST messages

➔ **UEFI Boot [Disabled]**

Use the **UEFI Boot** option to enable or disable to boot from a UEFI device.

➔ **Enabled**		Enable to boot from a UEFI device.
➔ **Disabled**	**DEFAULT**	Disable to boot from a UEFI device.

➔ **Launch PXE OpROM [Disabled]**

Use the **Launch PXE OpROM** option to enable or disable boot option for legacy network devices.

➔ **Disabled**	**DEFAULT**	Ignore all PXE Option ROMs
➔ **Enabled**		Load PXE Option ROMs

➔ **Option ROM Messages [Force BIOS]**

Use the **Option ROM Messages** option to set the Option ROM display mode.

➔ **Force BIOS**	**DEFAULT**	Sets display mode to force BIOS.
➔ **Keep Current**		Sets display mode to current.

5.7 Exit

Use the **Exit** menu (**BIOS Menu 19**) to load default BIOS values, optimal failsafe values and to save configuration changes.

```
     Aptio Setup Utility – Copyright (C) 2013 American Megatrends, Inc.
 Main    Advanced   Chipset   Security    Boot    Save & Exit

 Save Changes and Reset                        Reset the system after
 Discard Changes and Reset                     saving the changes.

 Restore Defaults
 Save as User Defaults
 Restore User Defaults

                                               ---------------------
                                               ←→: Select Screen
                                               ↑ ↓: Select Item
                                               EnterSelect
                                               + -   Change Opt.
                                               F1    General Help
                                               F2    Previous Values
                                               F3    Optimized Defaults
                                               F4    Save & Exit
                                               ESC   Exit
      Version 2.16.1242. Copyright (C) 2013 American Megatrends, Inc.
```

BIOS Menu 19:Exit

➔ **Save Changes and Reset**

Use the **Save Changes and Reset** option to save the changes made to the BIOS options and reset the system.

➔ **Discard Changes and Reset**

Use the **Discard Changes and Reset** option to exit the system without saving the changes made to the BIOS configuration setup program.

➔ **Restore Defaults**

Use the **Restore Defaults** option to load the optimal default values for each of the parameters on the Setup menus. **F3 key can be used for this operation.**

➔ **Save as User Defaults**

Use the **Save as User Defaults** option to save the changes done so far as user defaults.

➔ **Restore User Defaults**

Use the **Restore User Defaults** option to restore the user defaults to all the setup options.

Chapter

6

Programming OLED for DRPC-120-BTi-E5-OLED

6.1 Overview

The DRPC-120-BTi-E5-OLED comes with two programmable OLED display utilities that allow users to program their own APIs to show information on the OLED screen in graphic and text formats. The two utilities are listed below.

- **OLED Image Editor**: Allows displaying information in graphic format.
- **DR100 Demo Program**: Allows displaying information in text format.

The following sections describe how to use these two utilities in detail.

6.2 OLED Image Editor

The OLED Image Editor allows displaying information in graphic format.

6.2.1 OLED Image Editor Installation

To install the OLED Image Editor, please follow the steps below.

Step 1: Insert the driver CD into an optical disk drive connected to the system.

Step 2: Locate the **setup** file in the **OLEDImageEditor** folder of the driver CD. Double click the setup file to start the installation.

Step 3: The OLED Image Editor Setup Wizard welcome window appears (**Figure 6-1**). Click **Next** to start.

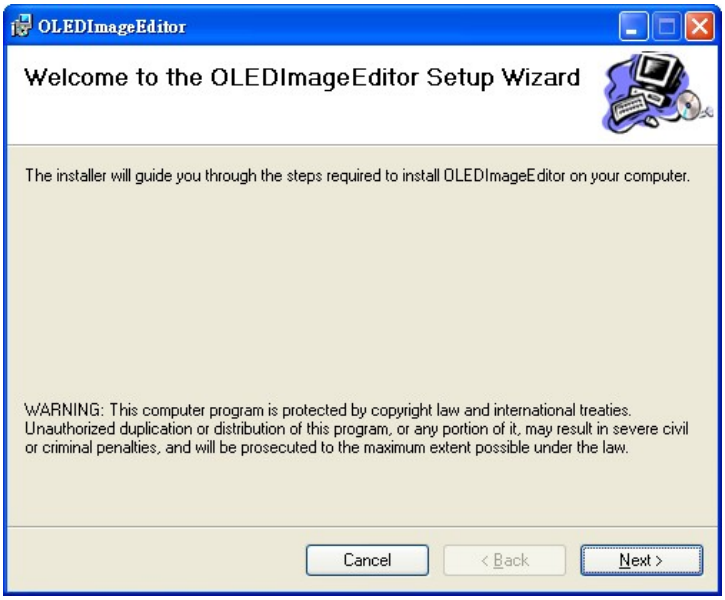

Figure 6-1: OLED Image Editor Setup Wizard

Step 4: Select a folder for OLED Image Editor Installation in **Figure 6-2**. Click **Next** to continue.

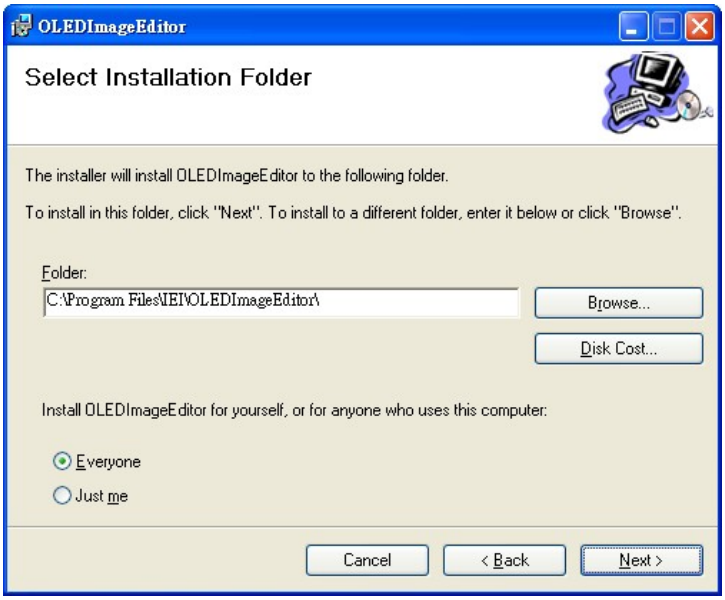

Figure 6-2: Select Installation Folder

Step 5: The following screen appears. Click **Next** to confirm the installation.

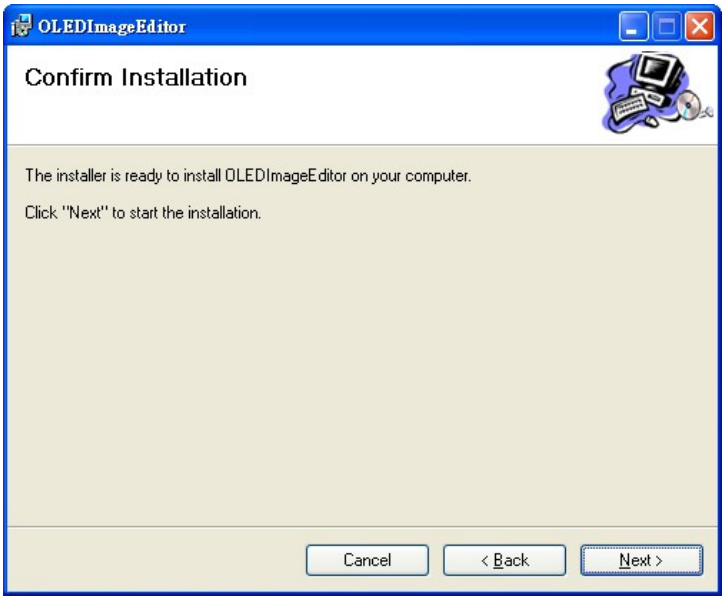

Figure 6-3: Confirm Installation

Step 6: The system starts installing the OLED Image Editor.

Step 7: When the OLED Image Editor is successfully installed, the following window appears. Click **Close** to exit.

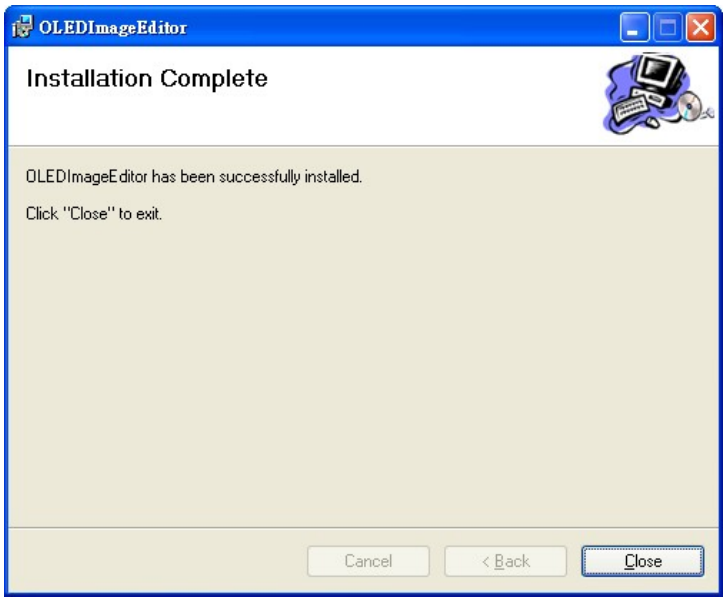

Figure 6-4: Installation Complete

6.2.2 Launching the OLED Image Editor

To launch the OLED Image Editor, double click the OLED Image Editor icon on the desktop.

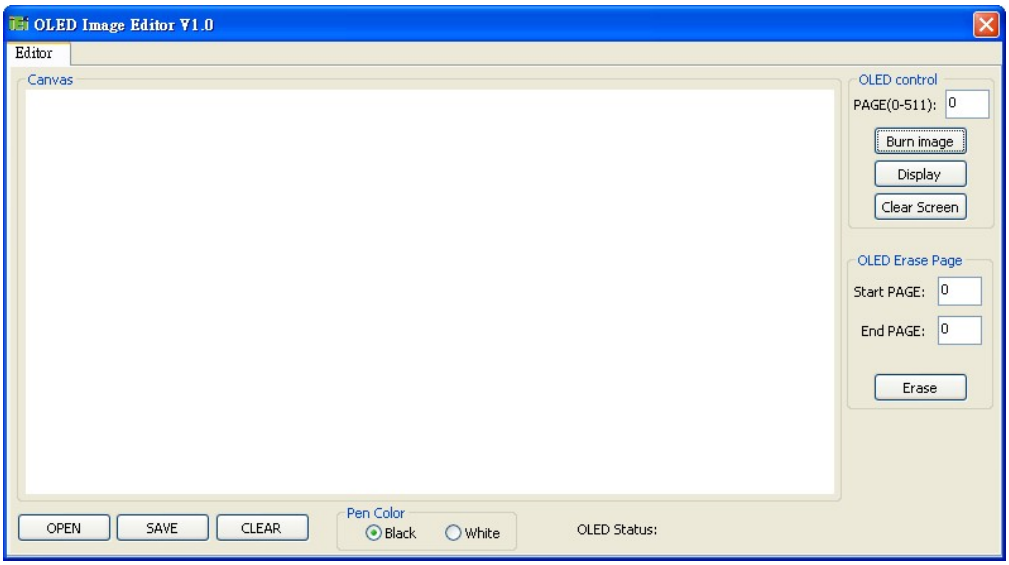

Figure 6-5: OLED Image Editor

6.2.3 Function List

The OLED Image Editor provides picture drawing function. Users can draw simple pictures on the Canvas.

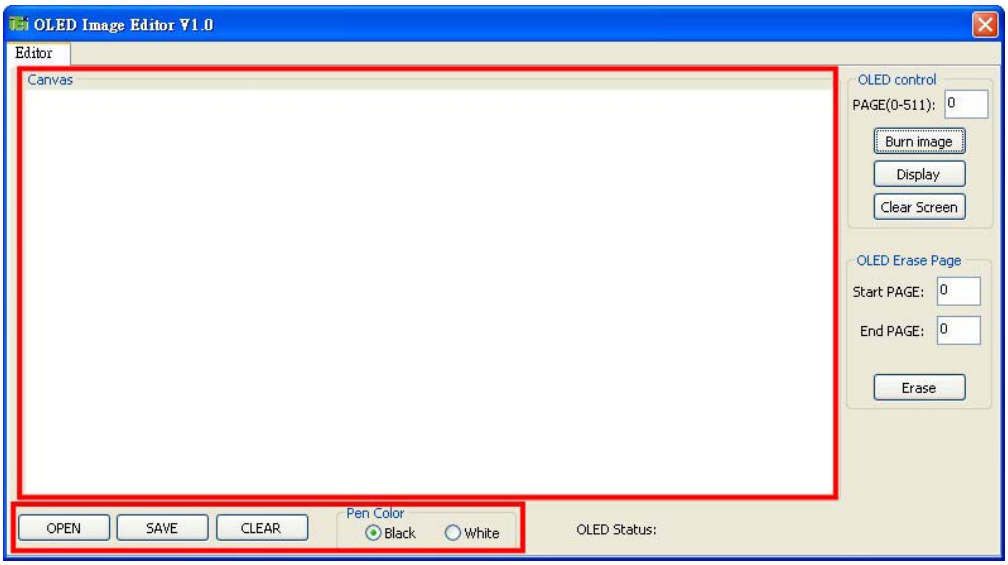

Figure 6-6: Function List

- **OPEN**:
  Allows loading a 24-bit BMP file. The resolution of the 24-bit BMP file must be 128 x 64.
- **SAVE**:
  Allows saving as a BMP file. The file must be saved as 24-bit BMP with 128 x 64 resolution.
- **CLEAR**:
  Clears the picture drew on the Canvas.
- **Pen Color**:
  Sets the pen color to black or white.

6.2.4 OLED Control

The OLED Control allows users to setup the OLED module. Refer to the **DRPC100-OLED UART Protocol** reference manual packaged in the driver CD for detailed setup.

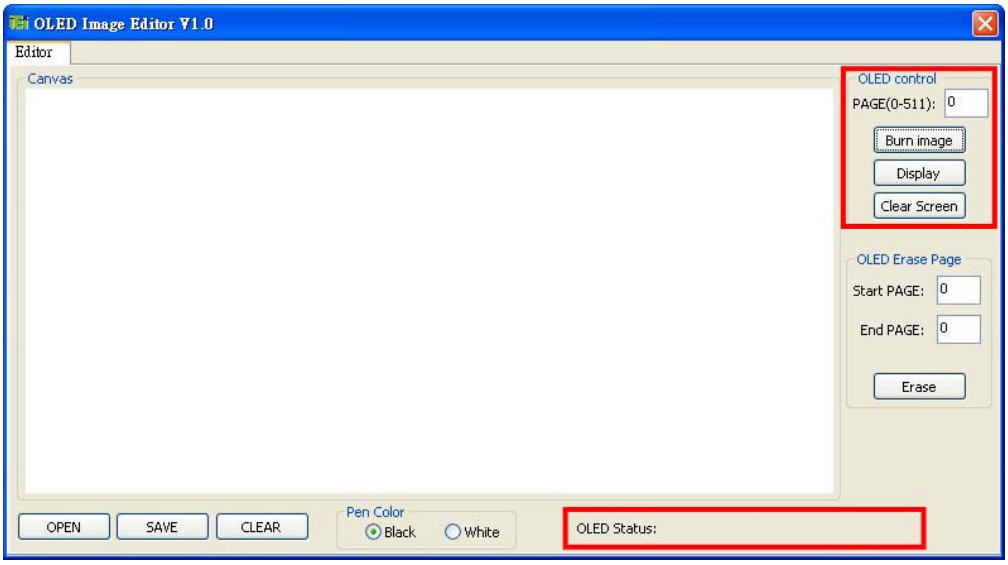

Figure 6-7: OLED Control

- **PAGE(0-511)**:
  Allows users to indicate a page number to burn or display the image of the page using the function buttons below it. The range of page number is 0 ~ 511.
- **Burn image**:
  Clicks to burn the image on the Canvas into the OLED module according to

the indicated page number. When writing an image into the OLED module, the OLED Status field displays “The page is under writing. Please wait…”. Please be patient and wait for several seconds. When finished, “Write Page Done” is displayed.

- **Display**:
  Clicks to show the corresponding image on the OLED display according to the indicated page number.
- **Clear Screen**:
  Clicks to clear the OLED screen.

6.2.5 OLED Erase Page

The OLED Erase Page allows users to erase the images in the indicated page numbers. The range of page number is 0 ~ 511. Please note that the **Start PAGE** must be smaller than the **End Page**.

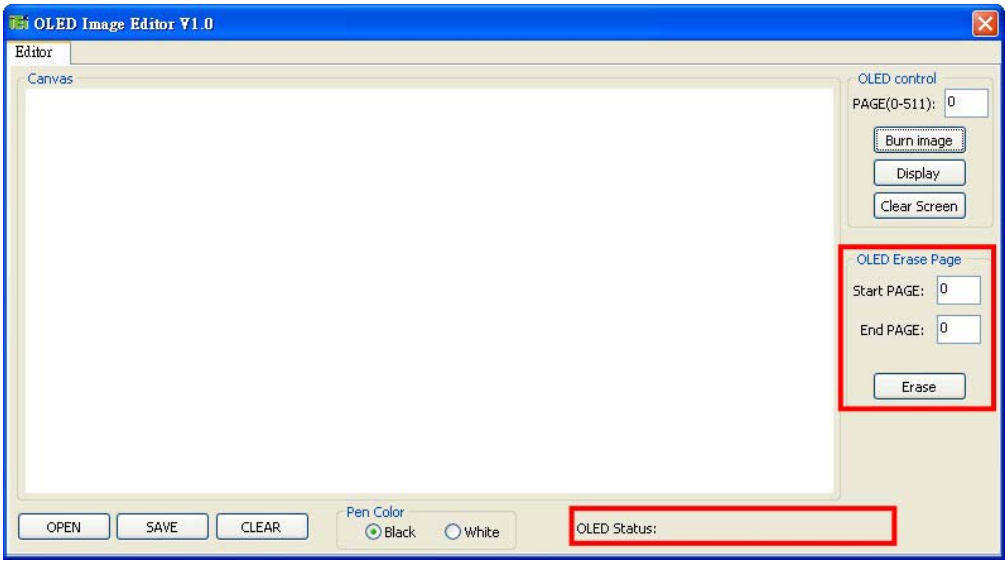

Figure 6-8: OLED Erase Page

When the page number range is set, click **Erase**. A warning message will appear to remind users the estimated time. Click **Yes** to continue. The OLED Status field will display the erasing status.

To erase all images, set the page number from 0 to 511.

6.3 DRPC100 Demo Program

NOTE:

Refer to the **DRPC100-Matrix LED UART Protocol** reference manual packaged in the driver CD for detailed setup.

The DRPC100 Demo Program allows displaying information in text format.

To launch the DRPC100, double click the **DRPC100_OLED_DEMO** file located in the **DEMO APP** folder of the driver CD. The main menu appears as below.

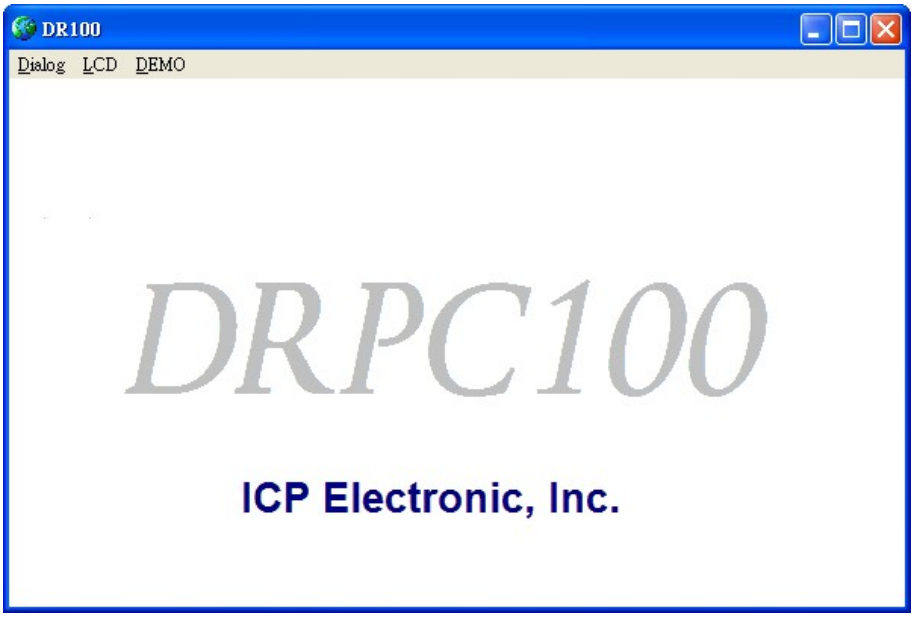

Figure 6-9: DR100 Demo Program Main Menu

6.3.1 Dialog Menu

The Dialog menu allows users to clear the OLED screen, and get ID.

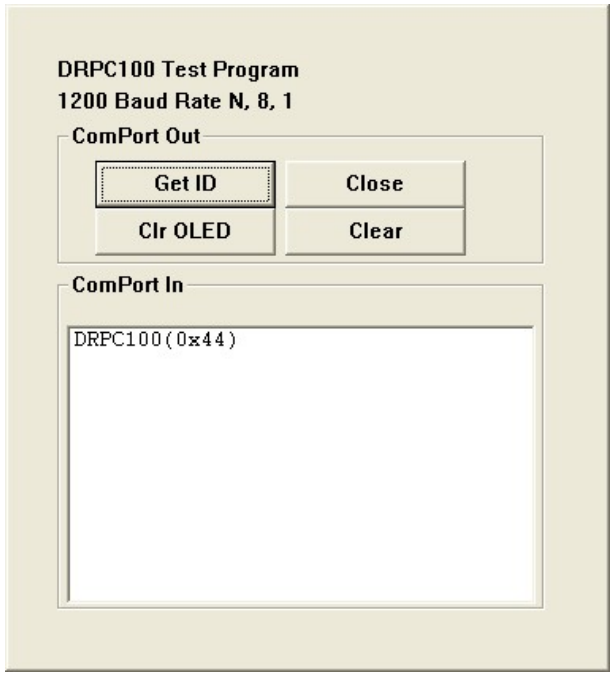

Figure 6-10: Dialog Menu

- **Get ID**: Click to get ID.
- **Clr OLED**: Click to clear the OLED screen.
- **Close**: Click to return to the main menu.
- **Clear**: Clear the messages.

6.3.2 LCD Menu

The LCD menu allows users to edit the text for displaying on the OLED screen of the system.

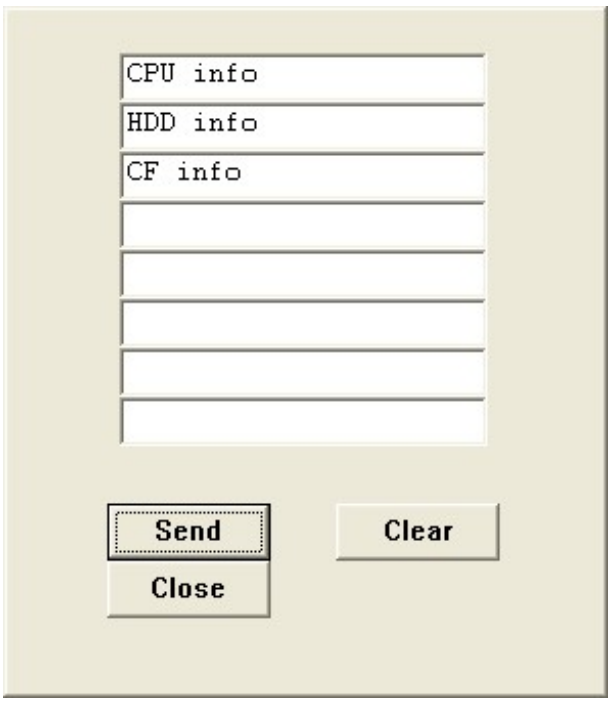

Figure 6-11: LCD Menu

- **Send**: Click to send the input text to be displayed on the OLED display.
- **Clear**: Clear the input text.
- **Close**: Click to return to the main menu.

6.3.3 DEMO Menu

The DEMO menu lists the activities of the function keys. Click **Close** to return to the main menu.

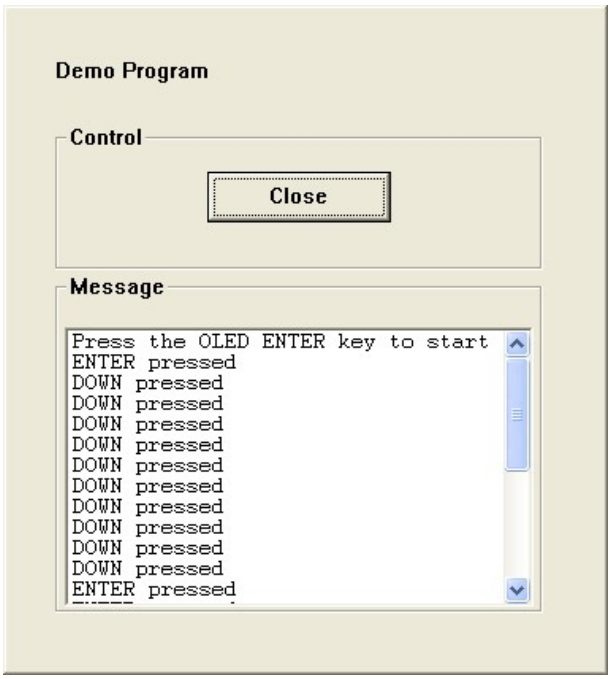

Figure 6-12: DEMO Menu

Chapter

7

Interface Connectors

7.1 Peripheral Interface Connectors

The DRPC-120-BTi embedded system motherboard comes with a number of peripheral interface connectors and configuration jumpers. The connector locations are shown in **Table 7-1** and **Figure 7-2**. The Pin 1 locations of the on-board connectors are also indicated in the diagrams. The connector pinouts for these connectors are listed in the following sections.

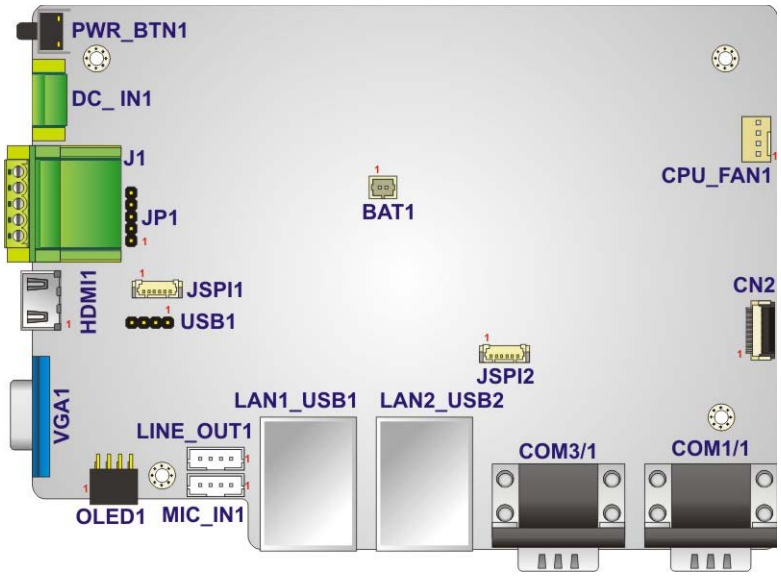

Figure 7-1: Main Board Layout Diagram (Front Side)

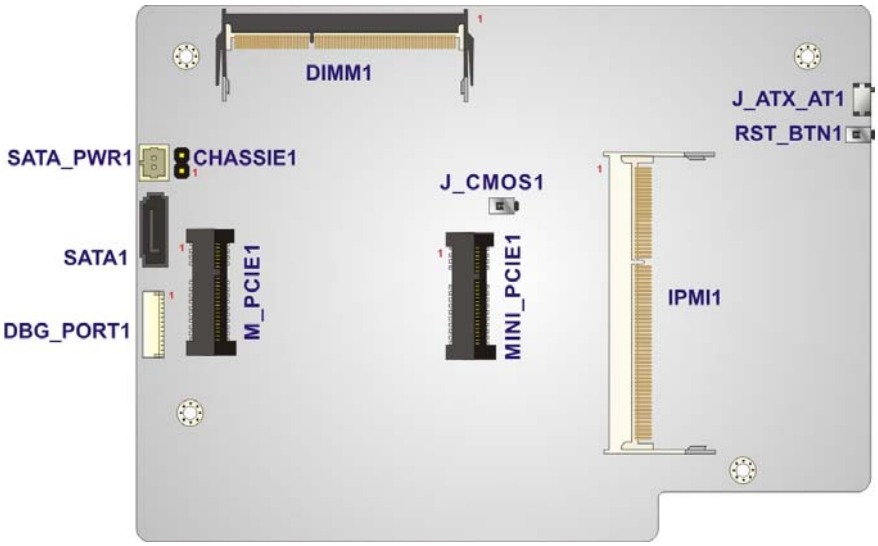

Figure 7-2: Main Board Layout Diagram (Solder Side)

7.2 Internal Peripheral Connectors

Internal peripheral connectors are found on the motherboard and are only accessible when the motherboard is outside of the chassis. The table below shows a list of the peripheral interface connectors on the DRPC-120-BTi motherboard. Pinouts of these connectors can be found in the following sections.

Connector	Type	Label
Audio line-out connector	4-pin wafer	LINE_OUT1
Audio mic-in connector	4-pin wafer	MIC_IN1
Battery connector	2-pin wafer	BAT1
Chassis intrusion connector	2-pin header	CHASSIE1
CPU fan connector	3-pin wafer	CPU_FAN1
IPMI module slot	SO-DIMM connector	IPMI1
Memory slot	SO-DIMM connector	DIMM1
OLED/LED signal connector	8-pin connector	OLED1
PCIe Mini slot (full-size)	Full-size PCIe Mini slot	M_PCIE1
PCIe Mini slot (half-size)	Half-size PCIe Mini slot	MINI-PCIE1
SATA connector	SATA connector	SATA1
SATA power connector	2-pin wafer	SATA_PWR1
SPI flash connector	6-pin wafer	JSPI1
SPI flash connector (EC)	6-pin wafer	JSPI2
USB connector	4-pin header	USB1

Table 7-1: Peripheral Interface Connectors

7.2.1 Audio Line-out Connector (LINE_OUT1)

PIN NO.	DESCRIPTION
1	SPK_R
2	AUDIO_GND
3	AUDIO_GND
4	SPK_L

Table 7-2: Audio Line-out Connector (LINE_OUT1) Pinouts

7.2.2 Audio Mic-in Connector (MIC_IN1)

PIN NO.	DESCRIPTION
1	MIC_R
2	AUDIO_GND
3	AUDIO_GND
4	MIC_L

Table 7-3: Audio Mic-in Connector (MIC_IN1) Pinouts

7.2.3 Battery Connector (BAT1)

PIN NO.	DESCRIPTION
1	VBATT
2	GND

Table 7-4: Battery Connector (BAT1) Pinouts

7.2.4 Chassis Intrusion Connector (CHASSIE1)

PIN NO.	DESCRIPTION
1	Case Open
2	GND

Table 7-5: Chassis Intrusion Connector (CHASSIE1) Pinouts

7.2.5 CPU Fan Connector (CPU_FAN1)

PIN NO.	DESCRIPTION
1	GND
2	+5V
3	FANIO
4	PWM

Table 7-6: CPU Fan Connector (CPU_FAN1) Pinouts

7.2.6 OLED/LED Signal Connector (OLED1)

PIN NO.	DESCRIPTION	PIN NO.	DESCRIPTION
1	+3V	2	+12V
3	LED_SDA	4	GPIO
5	LED_SCL	6	GPIO
7	GND	8	RESET#

Table 7-7: OLED/LED Signal Connector (OLED1) Pinouts

7.2.7 PCIe Mini Card Slot – Full Size (M_PCIE1)

PIN NO.	DESCRIPTION	PIN NO.	DESCRIPTION
1	PCIE_WAKE#	2	VCC3
3	N/C	4	GND
5	N/C	6	1.5V
7	N/C	8	N/C
9	GND	10	N/C
11	CLK-	12	N/C
13	CLK+	14	N/C
15	GND	16	N/C
17	PCIRST#	18	GND
19	N/C	20	VCC3
21	GND	22	PCIRST#
23	PERN/SATA_RXP	24	3VDual
25	PERP/SATA_RXN	26	GND

PIN NO.	DESCRIPTION	PIN NO.	DESCRIPTION
27	GND	28	1.5V
29	GND	30	SMBCLK
31	PETN/SATA_TXN	32	SMBDATA
33	PETP/SATA_TXP	34	GND
35	GND	36	USBD-
37	N/C	38	USBD+
39	N/C	40	GND
41	N/C	42	N/C
43	N/C	44	N/C
45	N/C	46	N/C
47	N/C	48	1.5V
49	N/C	50	GND
51	N/C	52	VCC3

Table 7-8: PCIe Mini Card Slot – Full Size (M_PCIE1) Pinouts

7.2.8 PCIe Mini Card Slot – Half Size (MINI-PCIE1)

PIN NO.	DESCRIPTION	PIN NO.	DESCRIPTION
1	PCIE_WAKE#	2	VCC3
3	N/C	4	GND
5	N/C	6	1.5V
7	N/C	8	N/C
9	GND	10	N/C
11	CLK-	12	N/C
13	CLK+	14	N/C
15	GND	16	N/C
17	PCIRST#	18	GND
19	N/C	20	VCC3
21	GND	22	PCIRST#
23	PERN2	24	3VDual
25	PERP2	26	GND
27	GND	28	1.5V

PIN NO.	DESCRIPTION	PIN NO.	DESCRIPTION
29	GND	30	SMBCLK
31	PETN2	32	SMBDATA
33	PETP2	34	GND
35	GND	36	USBD-
37	N/C	38	USBD+
39	N/C	40	GND
41	N/C	42	N/C
43	N/C	44	N/C
45	N/C	46	N/C
47	N/C	48	1.5V
49	N/C	50	GND
51	N/C	52	VCC3

Table 7-9: PCIe Mini Card Slot – Half Size (MINI-PCIE1) Pinouts

7.2.9 SATA 3Gb/s Connector (SATA1)

PIN NO.	DESCRIPTION
1	GND
2	TX+
3	TX-
4	GND
5	RX-
6	RX+
7	GND

Table 7-10: SATA 3Gb/s Connector (SATA1) Pinouts

7.2.10 SATA Power Connector (SATA_PWR1)

PIN NO.	DESCRIPTION
1	5V (supports 1A)
2	GND

Table 7-11: SATA Power Connector (SATA_PWR1) Pinouts

7.2.11 SPI Flash Connector (JSPI1)

PIN NO.	DESCRIPTION
1	SPI_VCC
2	SPI_CS
3	SPI_SO_SW
4	SPI_CLK_SW
5	SPI_SI_SW
6	GND

Table 7-12: SPI Flash Connector (JSPI1) Pinouts

7.2.12 SPI Flash Connector - EC (JSPI2)

PIN NO.	DESCRIPTION
1	SPI_VCC_EC
2	SPI_CS#_EC
3	SPI_SO_SW_EC
4	SPI_CLK_SW_EC
5	SPI_SI_SW_EC
6	GND

Table 7-13: SPI Flash Connector - EC (JSPI2) Pinouts

7.2.13 USB Connector (USB1)

PIN NO.	DESCRIPTION
1	VCC
2	USB_DATA-
3	USB_DAT+
4	GND

Table 7-14: USB Connector (USB1) Pinouts

7.3 External Interface Panel Connectors

The table below lists the rear panel connectors on the DRPC-120-BTi motherboard. Pinouts of these connectors can be found in the following sections.

Connector	Type	Label
Digital I/O terminal block	5-pin terminal block	J1
HDMI connector	HDMI	HDMI1
Power button	Push button	PWR_BTN1
Power input terminal block	3-pin terminal block	DC_IN1
Reset button	Push button	RST_BTN1
RJ-45 LAN and USB 2.0 connectors	RJ-45, USB 2.0	LAN2_USB2
RJ-45 LAN and USB 3.0 connectors	RJ-45, USB 3.0	LAN1_USB1
RS-232 serial ports	D-sub 9 male	COM1/2
RS-422/485 serial ports	D-sub 9 male	COM3/4
VGA connector	D-sub 15 female	VGA1

Table 7-15: Rear Panel Connectors

7.3.1 Digital I/O Terminal Block (J1)

PIN NO.	DESCRIPTION	PIN NO.	DESCRIPTION
1	DGI_0	2	DGO_0
3	DGI_1	4	DGO_1
5	DGI_2	6	DGO_2
7	DGI_3	8	DGO_3
9	Isolator GND	10	Isolator Vin

Table 7-16: Digital I/O Terminal Block (J1) Pinouts

7.3.2 Power Input Terminal Block (DC_IN1)

PIN NO.	DESCRIPTION
1	9~28V input
2	9~28V input
3	GND

Table 7-17: Power Input Terminal Block (DC_IN1) Pinouts

7.3.3 RJ-45 LAN Connector (LAN1)

PIN NO.	DESCRIPTION	PIN NO.	DESCRIPTION
20	LAN1_MDI0P	24	LAN1_MDI2P
21	LAN1_MDI0N	25	LAN1_MDI2N
22	LAN1_MDI1P	26	LAN1_MDI3P
23	LAN1_MDI1N	27	LAN1_MDI3N

Table 7-18: RJ-45 LAN Connector (LAN1) Pinouts

7.3.4 RJ-45 LAN Connector (LAN2)

PIN NO.	DESCRIPTION	PIN NO.	DESCRIPTION
P2	TRD2P0	P6	TRD2P2
P3	TRD2N0	P7	TRD2N2
P4	TRD2P1	P8	TRD2P3
P5	TRD2N1	P9	TRD2N3

Table 7-19: RJ-45 LAN Connector (LAN2) Pinouts

7.3.5 RS-232 Serial Ports (COM1/2)

PIN NO.	DESCRIPTION	PIN NO.	DESCRIPTION
1	DCD	6	DSR
2	RXD	7	RTS
3	TXD	8	CTS
4	DTR	9	RI
5	GND		

Table 7-20: RS-232 Serial Port (COM1/2) Pinouts

7.3.6 RS-422/485 Serial Ports (COM3/4)

PIN NO.	DESCRIPTION	PIN NO.	DESCRIPTION
1	RS422TX-/RS485D-	6	NC
2	RS422TX+/RS485D+	7	NC
3	RS422RX+	8	NC
4	RS422RX-	9	NC
5	GND		

Table 7-21: RS-422/485 Serial Port (COM3/4) Pinouts

7.3.7 USB 2.0 Connectors (USB2)

PIN NO.	DESCRIPTION	PIN NO.	DESCRIPTION
1	VCC	10	VCC
2	DATA-	11	DATA-
3	DATA+	12	DATA+
4	GROUND	13	GROUND

Table 7-22: USB 2.0 Connectors (USB2) Pinouts

7.3.8 USB 3.0 Connectors (USB1)

PIN NO.	DESCRIPTION	PIN NO.	DESCRIPTION
1	VCC	10	VCC
2	USB_DATA-	11	USB_DATA-
3	USB_DATA+	12	USB_ DATA+
4	GND	13	GND
5	USB3_RX-	14	USB3_RX-
6	USB3_RX+	15	USB3_ RX+
7	GND	16	GND
8	USB3_TX-	17	USB3_TX-
9	USB3_TX+	18	USB3_TX+

Table 7-23: USB 3.0 Connectors (USB1) Pinouts

7.3.9 VGA Connector (VGA1)

PIN NO.	DESCRIPTION	PIN NO.	DESCRIPTION
1	RED	2	GREEN
3	BLUE	4	NC
5	GND	6	GND
7	GND	8	GND
9	VCC	10	GND
11	NC	12	DDC DAT

13	HSYNC	14	VSYNC
15	DDCCLK		

Table 7-24: VGA Connector (VGA1) Pinouts

Appendix

A

Regulatory Compliance

DECLARATION OF CONFORMITY

This equipment is in conformity with the following EU directives:

- EMC Directive 2004/108/EC
- Low-Voltage Directive 2006/95/EC
- RoHS II Directive 2011/65/EU

If the user modifies and/or install other devices in the equipment, the CE conformity declaration may no longer apply.

If this equipment has telecommunications functionality, it also complies with the requirements of the R&TTE Directive 1999/5/EC.

English IEI Integration Corp declares that this equipment is in compliance with the essential requirements and other relevant provisions of Directive 1999/5/EC.
Български [Bulgarian] IEI Integration Corp. декларира, че този оборудване е в съответствие със съществените изисквания и другите приложими правила на Директива 1999/5/EC.
Česky [Czech] IEI Integration Corp tímto prohlašuje, že tento zařízení je ve shodě se základními požadavky a dalšími příslušnými ustanoveními směrnice 1999/5/ES.
Dansk [Danish] IEI Integration Corp erklærer herved, at følgende udstyr overholder de væsentlige krav og øvrige relevante krav i direktiv 1999/5/EF.
Deutsch [German] IEI Integration Corp, erklärt dieses Gerät entspricht den grundlegenden Anforderungen und den weiteren entsprechenden Vorgaben der Richtlinie 1999/5/EU.
Eesti [Estonian] IEI Integration Corp deklareerib seadme seadme vastavust direktiivi 1999/5/EÜ põhinõuetele ja nimetatud direktiivist tulenevatele teistele asjakohastele sätetele.

Español [Spanish] IEI Integration Corp declara que el equipo cumple con los requisitos esenciales y cualesquiera otras disposiciones aplicables o exigibles de la Directiva 1999/5/CE.
Ελληνική [Greek] IEI Integration Corp ΔΗΛΩΝΕΙ ΟΤΙ ΕΞΟΠΛΙΣΜΟΣ ΣΥΜΜΟΡΦΩΝΕΤΑΙ ΠΡΟΣ ΤΙΣ ΟΥΣΙΩΔΕΙΣ ΑΠΑΙΤΗΣΕΙΣ ΚΑΙ ΤΙΣ ΛΟΙΠΕΣ ΣΧΕΤΙΚΕΣ ΔΙΑΤΑΞΕΙΣ ΤΗΣ ΟΔΗΓΙΑΣ 1999/5/ΕΚ.
Français [French] IEI Integration Corp déclare que l'appareil est conforme aux exigences essentielles et aux autres dispositions pertinentes de la directive 1999/5/CE.
Italiano [Italian] IEI Integration Corp dichiara che questo apparecchio è conforme ai requisiti essenziali ed alle altre disposizioni pertinenti stabilite dalla direttiva 1999/5/CE.
Latviski [Latvian] IEI Integration Corp deklarē, ka iekārta atbilst būtiskajām prasībām un citiem ar to saistītajiem noteikumiem Direktīvas 1999/5/EK.
Lietuvių [Lithuanian] IEI Integration Corp deklaruoja, kad šis įranga atitinka esminius reikalavimus ir kitas 1999/5/EB Direktyvos nuostatas.
Nederlands [Dutch] IEI Integration Corp dat het toestel toestel in overeenstemming is met de essentiële eisen en de andere relevante bepalingen van richtlijn 1999/5/EG.
Malti [Maltese] IEI Integration Corp jiddikjara li dan prodott jikkonforma mal-ħtiġijiet essenzjali u ma provvedimenti oħrajn relevanti li hemm fid-Dirrettiva 1999/5/EC.
Magyar [Hungarian] IEI Integration Corp nyilatkozom, hogy a berendezés megfelel a vonatkozó alapvetõ követelményeknek és az 1999/5/EC irányelv egyéb elõírásainak.
Polski [Polish] IEI Integration Corp oświadcza, że wyrobu jest zgodny z zasadniczymi wymogami oraz pozostałymi stosownymi postanowieniami Dyrektywy 1999/5/EC.
Português [Portuguese] IEI Integration Corp declara que este equipamento está conforme com os requisitos essenciais e outras disposições da Directiva 1999/5/CE.

Româna [Romanian] IEI Integration Corp declară că acest echipament este in conformitate cu cerințele esențiale şi cu celelalte prevederi relevante ale Directivei 1999/5/CE.
Slovensko [Slovenian] IEI Integration Corp izjavlja, da je ta opreme v skladu z bistvenimi zahtevami in ostalimi relevantnimi določili direktive 1999/5/ES.
Slovensky [Slovak] IEI Integration Corp týmto vyhlasuje, že zariadenia spĺňa základné požiadavky a všetky príslušné ustanovenia Smernice 1999/5/ES.
Suomi [Finnish] IEI Integration Corp vakuuttaa täten että laitteet on direktiivin 1999/5/EY oleellisten vaatimusten ja sitä koskevien direktiivin muiden ehtojen mukainen.
Svenska [Swedish] IEI Integration Corp förklarar att denna utrustningstyp står I överensstämmelse med de väsentliga egenskapskrav och övriga relevanta bestämmelser som framgår av direktiv 1999/5/EG.

FCC WARNING

This equipment complies with Part 15 of the FCC Rules. Operation is subject to the following two conditions:

- This device may not cause harmful interference, and
- This device must accept any interference received, including interference that may cause undesired operation.

This equipment has been tested and found to comply with the limits for a Class A digital device, pursuant to part 15 of the FCC Rules. These limits are designed to provide reasonable protection against harmful interference when the equipment is operated in a commercial environment. This equipment generates, uses, and can radiate radio frequency energy and, if not installed and used in accordance with the instruction manual, may cause harmful interference to radio communications. Operation of this equipment in a residential area is likely to cause harmful interference in which case the user will be required to correct the interference at his own expense.

Federal Communication Commission Interference Statement

This equipment has been assembled with components that comply with the limits for a Class B digital device, pursuant to Part 15 of the FCC Rules. These limits are designed to provide reasonable protection against harmful interference in a residential installation. This equipment generates, uses and can radiate radio frequency energy and, if not installed and used in accordance with the instructions, may cause harmful interference to radio communications. However, there is no guarantee that interference will not occur in a particular installation. If this equipment does cause harmful interference to radio or television reception, which can be determined by turning the equipment off and on, the user is encouraged to try to correct the interference by one of the following measures:

- Reorient or relocate the receiving antenna.
- Increase the separation between the equipment and receiver.
- Connect the equipment into an outlet on a circuit different from that to which the receiver is connected.
- Consult the dealer or an experienced radio/TV technician for help.

Appendix

B

Safety Precautions

B.1 Safety Precautions

WARNING:

The precautions outlined in this appendix should be strictly followed. Failure to follow these precautions may result in permanent damage to the DRPC-120-BTi.

Please follow the safety precautions outlined in the sections that follow:

B.1.1 General Safety Precautions

Please ensure the following safety precautions are adhered to at all times.

- ***Make sure the power is turned off and the power cord is disconnected*** when moving, installing or modifying the system.
- ***Do not apply voltage levels that exceed the specified voltage range***. Doing so may cause fire and/or an electrical shock.
- ***Electric shocks can occur*** if opened while still powered on.
- ***Do not drop or insert any objects*** into the ventilation openings.
- ***If considerable amounts of dust, water, or fluids enter the system***, turn off the power supply immediately, unplug the power cord, and contact the system vendor.
- **DO NOT**:
  - Drop the system against a hard surface.
  - Strike or exert excessive force onto the LCD panel.
  - Touch any of the LCD panels with a sharp object
  - In a site where the ambient temperature exceeds the rated temperature

B.1.2 Anti-static Precautions

WARNING:

Failure to take ESD precautions during the installation of the DRPC-120-BTi may result in permanent damage to the DRPC-120-BTi and severe injury to the user.

Electrostatic discharge (ESD) can cause serious damage to electronic components, including the DRPC-120-BTi. Dry climates are especially susceptible to ESD. It is therefore critical that whenever the DRPC-120-BTi is opened and any of the electrical components are handled, the following anti-static precautions are strictly adhered to.

- ***Wear an anti-static wristband***: Wearing a simple anti-static wristband can help to prevent ESD from damaging any electrical component.
- ***Self-grounding***: Before handling any electrical component, touch any grounded conducting material. During the time the electrical component is handled, frequently touch any conducting materials that are connected to the ground.
- ***Use an anti-static pad***: When configuring or working with an electrical component, place it on an anti-static pad. This reduces the possibility of ESD damage.
- ***Only handle the edges of the electrical component***: When handling the electrical component, hold the electrical component by its edges.

B.1.3 Explanation of Graphical Symbols

This symbol warns the user that the part has this symbol is hot. Therefore, it is dangerous to make any kind of contact with this part.

This symbol alerts the user that important information concerning the operation and maintenance of this unit has been included. Therefore, the information should be read carefully in order to avoid any problems.

B.1.4 Product Disposal

CAUTION:

Risk of explosion if battery is replaced by an incorrect type. Only certified engineers should replace the on-board battery.

Dispose of used batteries according to instructions and local regulations.

- Outside the European Union - If you wish to dispose of used electrical and electronic products outside the European Union, please contact your local authority so as to comply with the correct disposal method.
- Within the European Union:

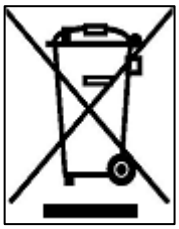

EU-wide legislation, as implemented in each Member State, requires that waste electrical and electronic products carrying the mark (left) must be disposed of separately from normal household waste. This includes monitors and electrical accessories, such as signal cables or power cords. When you need to dispose of your display products, please follow the guidance of your local authority, or ask the shop where you purchased the product. The mark on electrical and electronic products only applies to the current European Union Member States.

Please follow the national guidelines for electrical and electronic product disposal.

B.2 Maintenance and Cleaning Precautions

When maintaining or cleaning the DRPC-120-BTi, please follow the guidelines below.

B.2.1 Maintenance and Cleaning

Prior to cleaning any part or component of the DRPC-120-BTi, please read the details below.

- The interior of the DRPC-120-BTi does not require cleaning. Keep fluids away from the DRPC-120-BTi interior.
- Be cautious of all small removable components when vacuuming the DRPC-120-BTi.
- Turn the DRPC-120-BTi off before cleaning the DRPC-120-BTi.
- Never drop any objects or liquids through the openings of the DRPC-120-BTi.
- Be cautious of any possible allergic reactions to solvents or chemicals used when cleaning the DRPC-120-BTi.
- Avoid eating, drinking and smoking within vicinity of the DRPC-120-BTi.

B.2.2 Cleaning Tools

Some components in the DRPC-120-BTi may only be cleaned using a product specifically designed for the purpose. In such case, the product will be explicitly mentioned in the cleaning tips. Below is a list of items to use when cleaning the DRPC-120-BTi.

- ***Cloth*** – Although paper towels or tissues can be used, a soft, clean piece of cloth is recommended when cleaning the DRPC-120-BTi.
- ***Water or rubbing alcohol*** – A cloth moistened with water or rubbing alcohol can be used to clean the DRPC-120-BTi.
- ***Using solvents*** – The use of solvents is not recommended when cleaning the DRPC-120-BTi as they may damage the plastic parts.
- ***Vacuum cleaner*** – Using a vacuum specifically designed for computers is one of the best methods of cleaning the DRPC-120-BTi. Dust and dirt can restrict the airflow in the DRPC-120-BTi and cause its circuitry to corrode.
- ***Cotton swabs*** - Cotton swaps moistened with rubbing alcohol or water are excellent tools for wiping hard to reach areas.
- ***Foam swabs*** - Whenever possible, it is best to use lint free swabs such as foam swabs for cleaning.

Appendix

C

Digital I/O Interface

The DIO connector on the DRPC-120-BTi is interfaced to GPIO ports on the Super I/O chipset. The DIO has both 8-bit digital inputs and 8-bit digital outputs. The digital inputs and digital outputs are generally control signals that control the on/off circuit of external devices or TTL devices. Data can be read or written to the selected address to enable the DIO functions.

NOTE:

For further information, please refer to the datasheet for the Super I/O chipset.

The BIOS interrupt call **INT 15H** controls the digital I/O.

INT 15H:

AH – 6FH	
Sub-function:	
AL – 8	:Set the digital port as INPUT
AL	:Digital I/O input value

Assembly Language Sample 1

```
MOV     AX, 6F08H       ;setting the digital port as input
INT     15H             ;
```

AL low byte = value

AH – 6FH	
Sub-function:	
AL – 9	:Set the digital port as OUTPUT
BL	:Digital I/O output value

Assembly Language Sample 2

```
MOV     AX, 6F09H       ;setting the digital port as output
MOV     BL, 09H         ;digital value is 09H
INT     15H             ;
```

Digital Output is 1001b

Appendix

D

Watchdog Timer

NOTE:

The following discussion applies to DOS. Contact IEI support or visit the IEI website for drivers for other operating systems.

The Watchdog Timer is a hardware-based timer that attempts to restart the system when it stops working. The system may stop working because of external EMI or software bugs. The Watchdog Timer ensures that standalone systems like ATMs will automatically attempt to restart in the case of system problems.

A BIOS function call (INT 15H) is used to control the Watchdog Timer.

INT 15H:

AH – 6FH Sub-function:	
AL – 2:	Sets the Watchdog Timer's period.
BL:	Time-out value (Its unit-second is dependent on the item "Watchdog Timer unit select" in CMOS setup).

Table D-1: AH-6FH Sub-function

Call sub-function 2 to set the time-out period of Watchdog Timer first. If the time-out value is not zero, the Watchdog Timer starts counting down. When the timer value reaches zero, the system resets. To ensure that this reset condition does not occur, calling sub-function 2 must periodically refresh the Watchdog Timer. However, the watchdog timer is disabled if the time-out value is set to zero.

A tolerance of at least 10% must be maintained to avoid unknown routines within the operating system (DOS), such as disk I/O that can be very time-consuming.

NOTE:

The Watchdog Timer is activated through software. The software application that activates the Watchdog Timer must also deactivate it when closed. If the Watchdog Timer is not deactivated, the system will automatically restart after the Timer has finished its countdown.

EXAMPLE PROGRAM:

```
; INITIAL TIMER PERIOD COUNTER

;
W_LOOP:
;

        MOV         AX, 6F02H           ;setting the time-out value
        MOV         BL, 30              ;time-out value is 48 seconds
        INT     15H

;
; ADD THE APPLICATION PROGRAM HERE
;

        CMP         EXIT_AP, 1          ;is the application over?
        JNE     W_LOOP              ;No, restart the application

        MOV         AX, 6F02H           ;disable Watchdog Timer
        MOV         BL, 0           ;
        INT     15H

;
; EXIT ;
```

Appendix

E

Hazardous Materials Disclosure

The details provided in this appendix are to ensure that the product is compliant with the Peoples Republic of China (China) RoHS standards. The table below acknowledges the presences of small quantities of certain materials in the product, and is applicable to China RoHS only.

A label will be placed on each product to indicate the estimated "Environmentally Friendly Use Period" (EFUP). This is an estimate of the number of years that these substances would "not leak out or undergo abrupt change." This product may contain replaceable sub-assemblies/components which have a shorter EFUP such as batteries and lamps. These components will be separately marked.

Please refer to the following table.

Part Name	Toxic or Hazardous Substances and Elements					
	Lead (Pb)	Mercury (Hg)	Cadmium (Cd)	Hexavalent Chromium (CR(VI))	Polybrominated Biphenyls (PBB)	Polybrominated Diphenyl Ethers (PBDE)
Housing	O	O	O	O	O	O
Display	O	O	O	O	O	O
Printed Circuit Board	O	O	O	O	O	O
Metal Fasteners	O	O	O	O	O	O
Cable Assembly	O	O	O	O	O	O
Fan Assembly	O	O	O	O	O	O
Power Supply Assemblies	O	O	O	O	O	O
Battery	O	O	O	O	O	O

O: This toxic or hazardous substance is contained in all of the homogeneous materials for the part is below the limit requirement in SJ/T11363-2006 (now replaced by GB/T 26572-2011).

X: This toxic or hazardous substance is contained in at least one of the homogeneous materials for this part is above the limit requirement in SJ/T11363-2006 (now replaced by GB/T 26572-2011).

此附件旨在确保本产品符合中国 RoHS 标准。以下表格标示此产品中某有毒物质的含量符合中国 RoHS 标准规定的限量要求。

本产品上会附有"环境友好使用期限"的标签，此期限是估算这些物质"不会有泄漏或突变"的年限。本产品可能包含有较短的环境友好使用期限的可替换元件，像是电池或灯管，这些元件将会单独标示出来。

部件名称	有毒有害物质或元素					
	铅 (Pb)	汞 (Hg)	镉 (Cd)	六价铬 (CR(VI))	多溴联苯 (PBB)	多溴二苯醚 (PBDE)
壳体	O	O	O	O	O	O
显示	O	O	O	O	O	O
印刷电路板	O	O	O	O	O	O
金属螺帽	O	O	O	O	O	O
电缆组装	O	O	O	O	O	O
风扇组装	O	O	O	O	O	O
电力供应组装	O	O	O	O	O	O
电池	O	O	O	O	O	O

O: 表示该有毒有害物质在该部件所有物质材料中的含量均在 SJ/T 11363-2006 (现由 GB/T 26572-2011 取代) 标准规定的限量要求以下。

X: 表示该有毒有害物质至少在该部件的某一均质材料中的含量超出 SJ/T 11363-2006 (现由 GB/T 26572-2011 取代) 标准规定的限量要求。