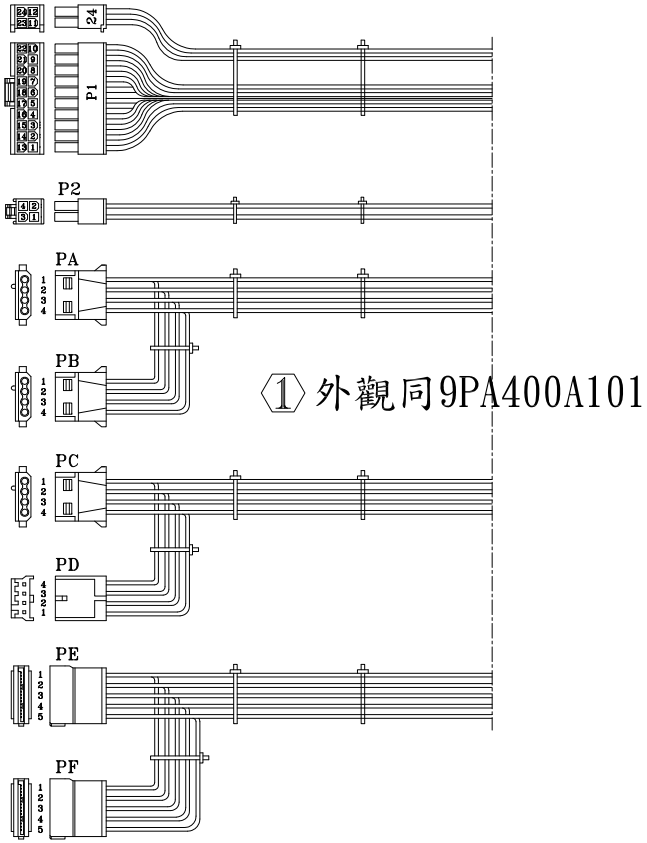

〈1〉外觀同9PA400A101

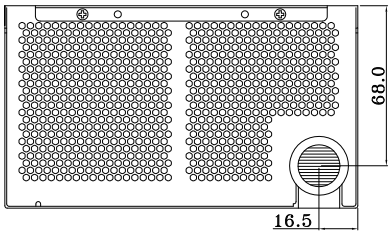

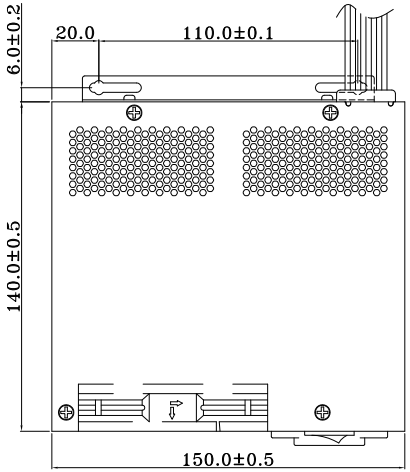

REF. ID.	PIN NO.	SIGNAL	WIRE COLOR	GAUGE	CONNECTOR TYPE	CABLE LENGTH
P1/24	1	+3.3VDC	ORANGE	20	WST P20-I42002K11D+ P4-I42002K11D or EQUIV.	500±15mm
	2	+3.3VDC	ORANGE	20		
	3	COM	BLACK	20		
	4	+5VDC	RED	20		
	5	COM	BLACK	20		
	6	+5VDC	RED	20		
	7	COM	BLACK	20		
	8	PW-ON	GRAY	22		
	9	+5Vsb	PURPLE	20		
	10	+12V2	YELLOW	20		
	11	+12V2	YELLOW	20		
	12	+3.3VDC	ORANGE	20		
	13	+3.3VDC	ORANGE	20		
		+3.3VSense	BROWN	22		
	14	-12VDC	BLUE	22		
	15	COM	BLACK	20		
	16	PS-ON	GREEN	22		
	17	COM	BLACK	20		
	18	COM	BLACK	20		
	19	COM	BLACK	20		
	20	-5VDC	WHITE	22		
	21	+5VDC	RED	20		
	22	+5VDC	RED	20		
	23	+5VDC	RED	20		
	24	COM	BLACK	20		
P2	1	COM	BLACK	20	MOLEX 39-01-2040 or EQUIV.	500±15mm
	2	COM	BLACK	20		
	3	+12V1	Yel/Black	20		
	4	+12V1	Yel/Black	20		
PA PC	1	+12V2	YELLOW	20	AMP 1-480424-0 or EQUIV.	500±15mm
	2	COM	BLACK	20		
	3	COM	BLACK	20		
	4	+5V	RED	20		
PB	1	+12V2	YELLOW	20	AMP 1-480424-0 or EQUIV.	155±10mm
	2	COM	BLACK	20		
	3	COM	BLACK	20		
	4	+5V	RED	20		
PD	1	+5V	RED	22	AMP 171822-4 or EQUIV.	155±10mm
	2	COM	BLACK	22		
	3	COM	BLACK	22		
	4	+12V2	YELLOW	22		
PE	1	+3.3VDC	ORANGE	20	MOLEX SD-67582-001 or EQUIV.	500±15mm
	2	COM	BLACK	20		
	3	+5V	RED	20		
	4	COM	BLACK	20		
	5	+12V2	YELLOW	20		
PF	1	+3.3VDC	ORANGE	20	MOLEX SD-67582-001 or EQUIV.	155±10mm
	2	COM	BLACK	20		
	3	+5V	RED	20		
	4	COM	BLACK	20		
	5	+12V2	YELLOW	20		

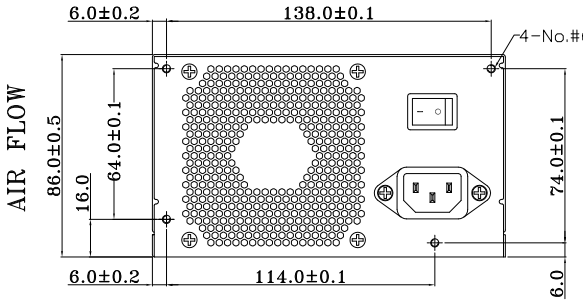

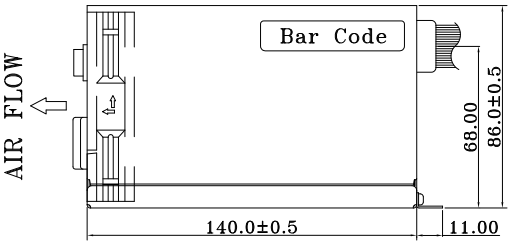

ICP Deutschland GmbH | +49(0)7121-14323-20 | sales@icp-deutschland.de | www.icp-deutschland.de