IEI Technology Corp.

MODEL:

EC-1040GB

4U 14-slot Rackmount LCD Workstation

User Manual

Rev. 3.00 – 18 July, 2011

RoHS Lead Free

Revision

Date	Version	Changes
18 July, 2011	3.00	Updated for R30 version
December, 2006	1.00	Initial release

Copyright

COPYRIGHT NOTICE

TRADEMARKS

Packing List

NOTE:

If any of the components listed in the checklist below are missing, please do not proceed with the installation. Contact the IEI reseller or vendor you purchased the EC-104G Rackmount Workstation from or contact an IEI sales representative directly. To contact an IEI sales representative, please send an email to sales@iei.com.tw.

The items listed below should all be included in the EC-104G Rackmount Workstation package.

- 1 x EC-104G Rackmount Workstation
- 1 x Screw Kit
- 1 x Power Cable
- 2 x PS/2 Cable
- 1 x VGA Cable
- 1 x RS-232 Cable
- 2 x Handle Bracket
- 2 x Handle
- 1 x Floppy Disk
- 1 x User Manual - CDROM
- 1 x PS/2 Cable (ATX model only)
- 1 x RS-232 Cable (ATX model only)
- 1 x Touch Screen Touch Pen / Driver CDROM (ATX model only)

Images of the above items are shown in **Chapter 3**.

Table of Contents

List of Figures

List of Tables

Chapter

1

Introduction

1.1 EC-1040GB Overview

The EC-1040GB is a PC/AT compatible computer designed for industrial applications. It has a rugged steel chassis specially designed to work under harsh environmental conditions while also being high reliability. The EC-1040GB features 14-slot passive backplanes and a full line of dependable AC/DC power supplies. The EC-1040GB can withstand shock, vibration, dust and a wide range of temperatures in industrial environments. A lockable door protects drive bays and switches from unauthorized misuse and dust. The EC-1040GB also has two removable cooling-fans installed in the front panel for optimum cooling of the system.

1.2 EC-1040GB Features

Some of the features of the EC-1040GB include:

- 6.5” TFT LCD with fully functional OSD
- Multi-function thermal alarm system
- Optional KM-088G (keyboard and touch pad module)
- Optional Touch screen
- Flexible driver combination
- PICMG 1.3 backplane and Redundant power supply support
- Advanced air-flow design

1.3 Model Variations

The EC-1040GB comes in a variety of models. The models have special features as identified by their model name. The EC-1040GB model variations are listed in **Table 1-1**.

	Touch Screen	ATX Motherboard Rear Panel	300W Power Supply	Expansion Slots
EC-1040GBB/A130A-R30	No	No	Yes	14
EC-1040GBB/A130A/R-R30	Yes	No	Yes	14
EC-1040GBBATX/A130A-R30	No	Yes	Yes	7
EC-1040GBBATX/A130A/R-R30	Yes	Yes	Yes	7

Table 1-1: EC-1040GB Model Variations

1.4 Optional Keyboard

The **KM-088G-(L)** optional keyboard may be purchased separately for the EC-1040GB rackmount workstation with the following specifications:

- 88 keys
- Touchpad with left and right buttons
- Num lock, Caps lock and Scroll lock indicators
- PS/2 keyboard connector
- (L) specifies keyboard language
  - DE: German
  - EN: English
  - FR: French
  - IT: Italian
  - JP: Japanese
  - RU: Russian
  - SP: Spanish
  - TW: Traditional Chinese

1.5 Certifications

All EC-1040GB rackmount workstations comply with the following international standards:

- RoHS

For a more detailed description of this standard, please refer to **Appendix A**.

Chapter

2

Mechanical Overview

2.1 External Overview

The following sections describe the physical layout of the EC-1040GB rackmount workstation.

2.1.1 Front Panel

The EC-1040GB rackmount workstation has the following front panel items:

- Plastic frame
- 6.5” Flat panel TFT LCD screen with OSD controls
- Lockable drive bay access door conceals
  - Three 5.25” drive bays
  - One 3.5” drive bay
  - Power switch
- Temperature, LAN and fan LEDs
- Buzzer off button
- Optional Keyboard

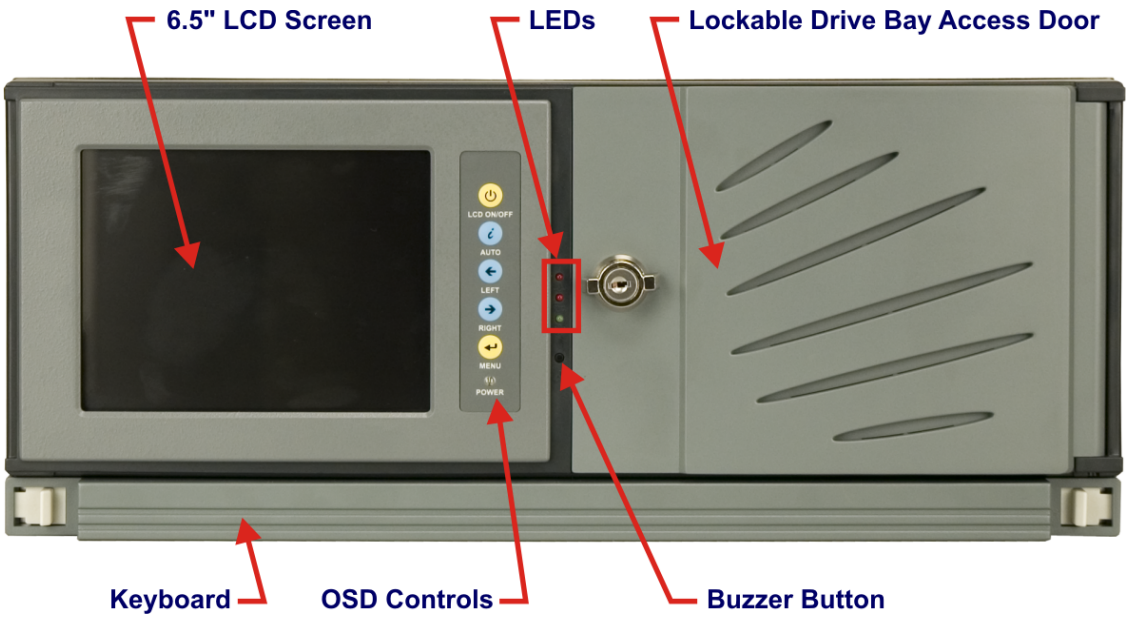

Figure 2-1: EC-1040GB Front Panel

2.1.2 14 Slot Rear Panel

The EC-1040GB rackmount workstation has the following rear panel items:

- Internal PSU
- 14 expansion slots
- VGA connector
- Keyboard connector
- Serial connector for alarm board
- Optional Touch Screen connector

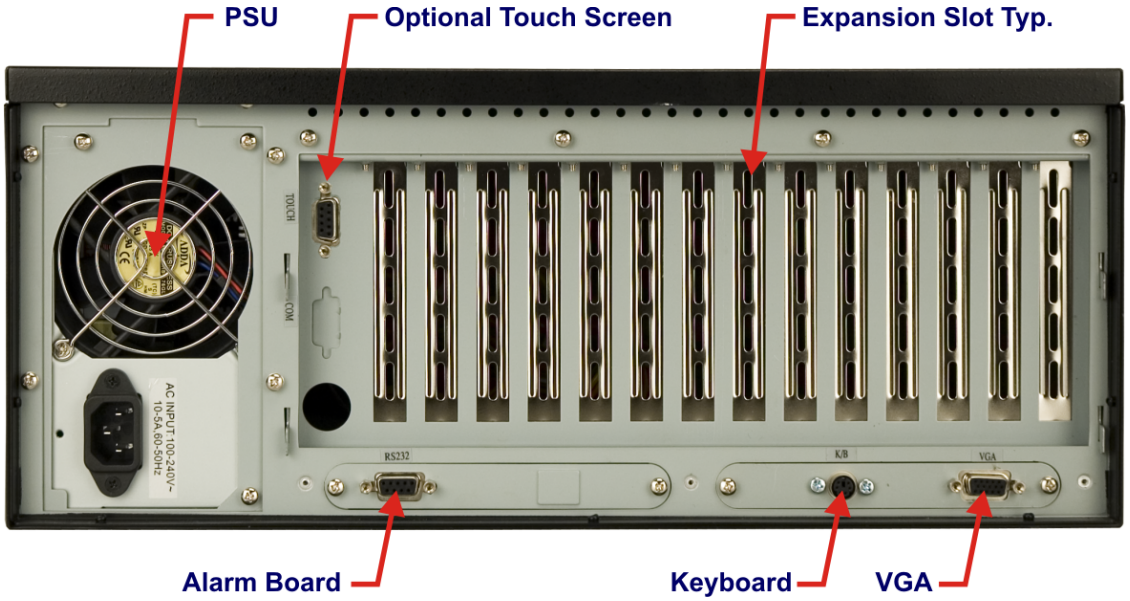

Figure 2-2: EC-1040GB 14 Slot Rear Panel

2.1.3 Motherboard Rear Panel

The EC-1040GB rackmount workstation also has an optional motherboard rear panel with the following items:

- Internal PSU
- 7 expansion slots
- VGA connector
- Keyboard connector
- Serial connector for alarm board
- Optional Touch Screen connector
- ATX Motherboard connector area

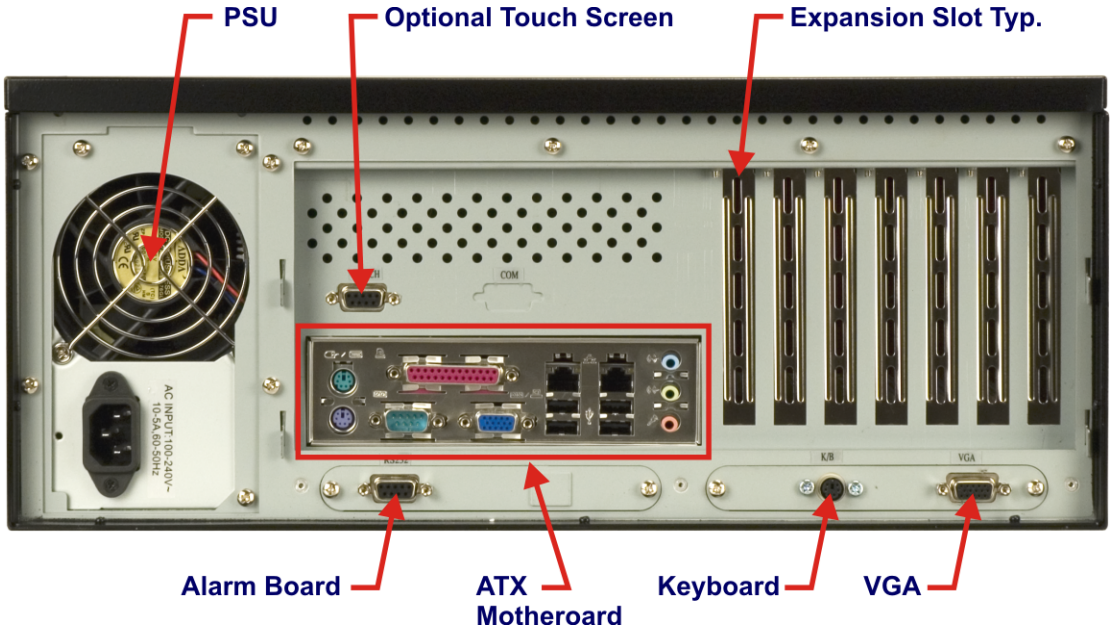

Figure 2-3: EC-1040GB Motherboard Rear Panel

2.1.4 Top Panel

The EC-1040GB rackmount workstation has the following top panel items:

- Cooling vents

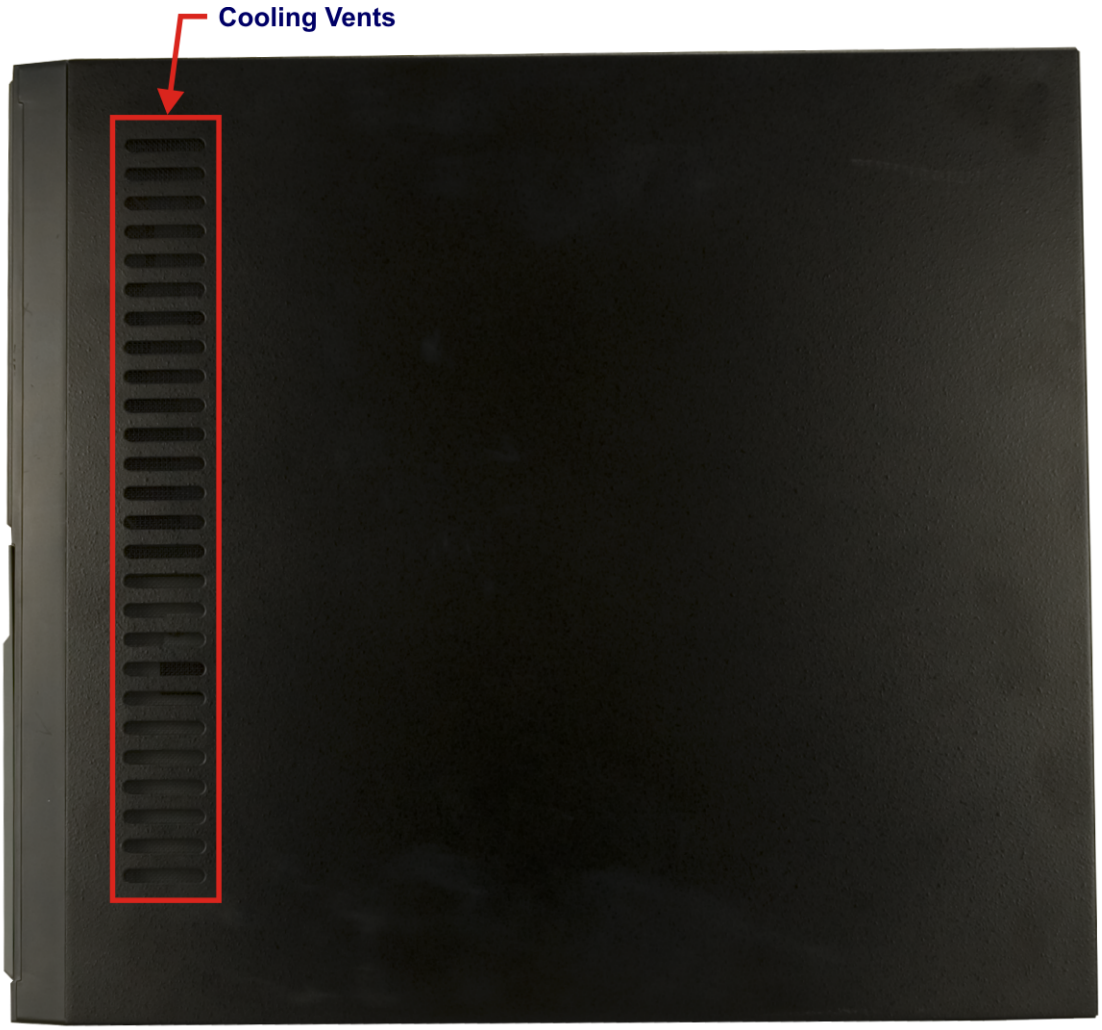

Figure 2-4: EC-1040GB Top Panel

2.1.5 Left Side Panel

The EC-1040GB rackmount workstation has the following left side panel items:

- Cooling vents

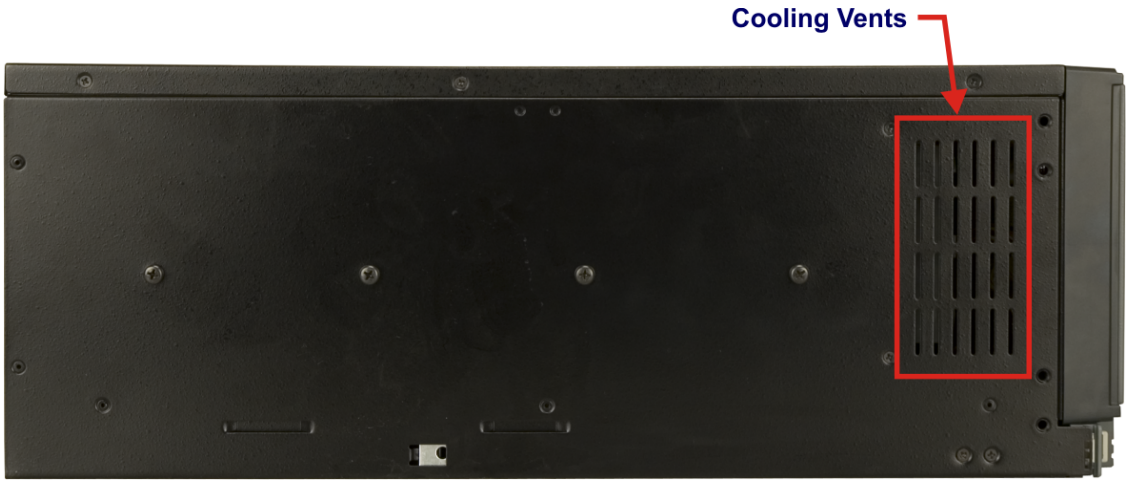

Figure 2-5: EC-1040GB Left Side Panel

2.2 Physical Dimensions

The following sections describe the physical dimensions of the EC-1040GB.

2.2.1 General Physical Dimensions

General physical dimensions for the EC-1040GB are shown in **Table 2-1**.

Width (mm)	Height (mm)	Depth (mm)
431	177	480

Table 2-1: General Physical Dimensions

2.2.2 EC-1040GB Physical Dimensions

The physical dimensions of the EC-1040GB are shown in **Figure 2-1**.

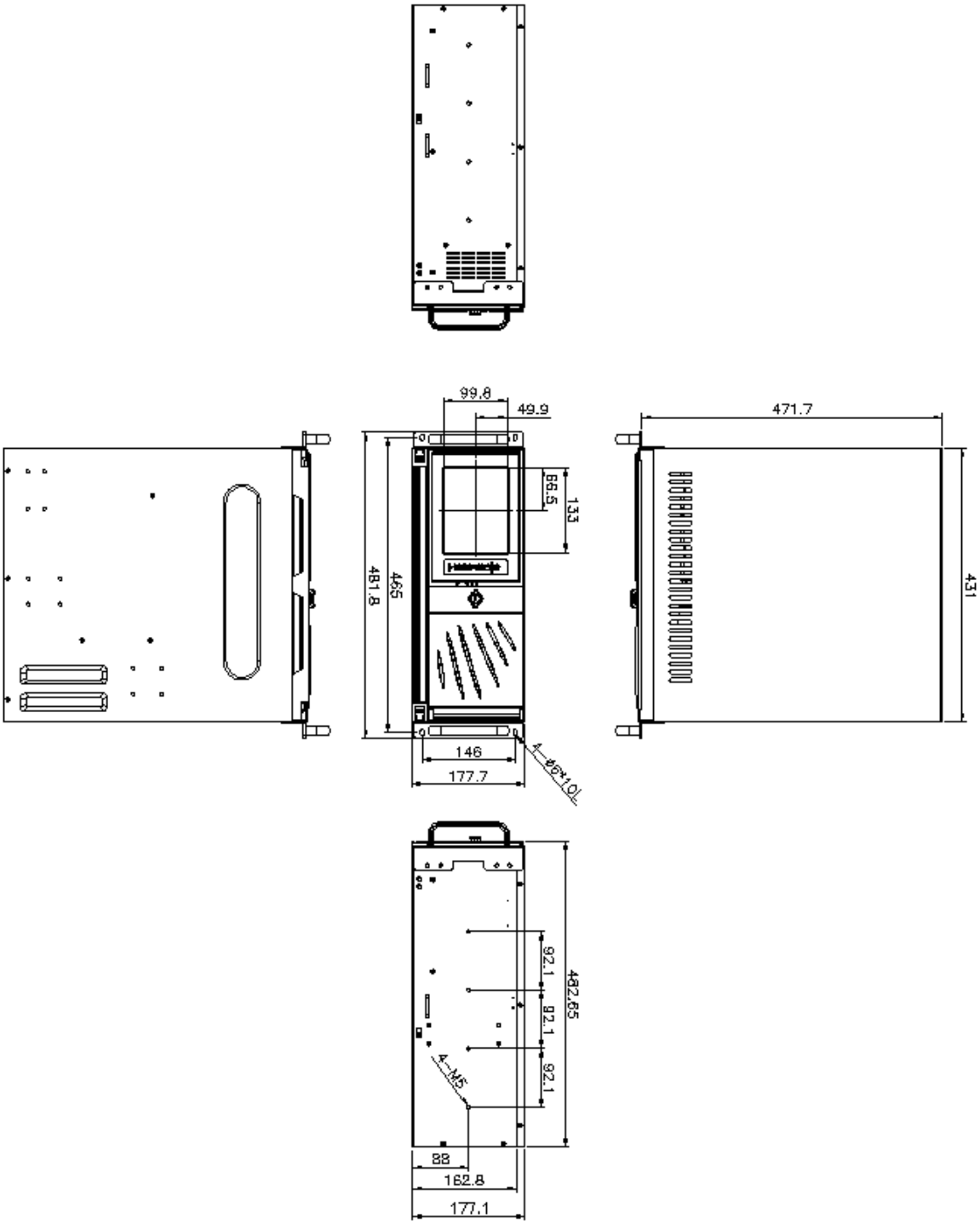

Figure 2-6: EC-1040GB Physical Dimensions (millimeters)

2.2.3 Optional Keyboard

Figure 2.7 shows the optional keyboard for the EC-1040GB rackmount workstation. Refer to **Section 4-5-13** for installation details.

Figure 2-7: Optional Keyboard

Chapter

3

Detailed Specifications

3.1 EC-1040GB Specifications

Table 3-1 shows the EC-1040GB specifications.

LCD Type	6.5" TFT
Input Interface	VGA
Max. Resolution	640 x 480
Backlight MTBF	50,000 Hrs
Contrast	600:1
LCD Color	262K
Brightness (cd/m2)	800
Chassis	Heavy-duty steel
View Angle (H / V)	160° / 140°
OSD function	Yes
Mounting	19” Rack Mount
Rack Height	4U
Keyboard	88 Keys – Slim Size (Keyboard models only)
Touch Pad	Yes – with 2 buttons
Cooling Fan	2 – 8cm
Expansion Slots	14 for EC-1040GB 7 for EC-1040GBATX
Dimensions (WxHxD) (mm)	431 x 177 x 480
Weight (Gross/Net)	15.3kg / 28.8kg
Color	Black (Pantone Black C)
Vibration	5 ~ 17 Hz, 0.1” double amplitude displacement 17 ~ 640 Hz, 1.5G acceleration peak to peak
Shock	10G acceleration peak to peak (11ms)
Humidity	5 ~ 95%, relative
Operating Temperature	0 ~ 50°C

Table 3-1: EC-1040GB Specifications

3.2 LCD Specifications

Table 3-2 lists the EC-1040GB LCD specifications.

Size	6.5”
MFR/Model	AUO/G065VN01 V2
Resolution	VGA (640 x 480)
Active Area (mm)	132.52 x 98.64
Pixel Pitch (mm)	0.207
Number of Colors	262K
View Angle (H/V)	160° / 140°
Brightness (cd/m2)	800
Contrast Ratio	600:1
Response Time (ms) (at 25C)	25
Power Consumption (W)	3.86
Interface	LVDS
Supply Voltage (V)	3.3
Backlight	CCFL side light (L-type)
Lamp Life (hrs)	50000

Table 3-2: LCD Specifications

3.3 ACE-832AP PSU Specifications

Table 3-3 lists the ACE-A130A-R10 power supply specifications.

INPUT	Voltage	90 ~ 264 VAC Full Range		
	Frequency	47 ~ 63 Hz		
	Input Current	6A (RMS) @ 115 VAC 3A (RMS) @ 230 VAC		
	Inrush Current	60 A Max for 115 VAC 90 A Max for 230 VAC		
OUTPUT	Voltage	Min. load	Max. load	Ripple & Noise
	+3.3V	0.1 A	28 A	50 mV
	+5V	0.2 A	30 A	50 mV
	+12V1	0.1 A	15 A	120 mV
	+12V2	0.5 A	0.3 A	120 mV
	-12V	0 A	0.8 A	120 mV
	+5Vsb	0 A	2 A	50 mV
	Total Current of +3.3V & +5V & +12V ≦280W			
GENERAL	Power	300W		
	PFC	Active		
	Hold-up Time	17ms minimum		
	Efficiency	65%		
	MTBF	100,000hrs		
	Temperature	-5 ~ 50°C (Operating) -20 ~ 80°C (Storage)		
	Dimensions	140 mm x 150 mm x 86 mm		

Table 3-3: ACE-A130A-R10 PSU Specifications

3.4 Recommended IEI Backplanes, Motherboards and PSUs

Refer to **Appendix B** for recommended IEI backplanes, motherboards and power supply units for the EC-1040GB rackmount workstation.

Chapter

4

Installation

4.1 Installation Considerations

4.1.1 Installation Precautions

When installing the EC-1040GB, please follow the precautions listed below:

- **Read the user manual:** The user manual provides a complete description of the EC-1040GB rackmount workstation, installation instructions and configuration options.
- **Turn Off Power:** When installing the EC-1040GB rackmount workstation, make sure the power is off. Failing to turn off the power may cause severe injury to the user and/or damage the system.
- **Certified Engineers:** Only certified engineers and technicians should install and modify the EC-1040GB rackmount workstation. Non-certified engineers or technicians should not attempt to install the EC-1040GB rackmount workstation.
- **Mounting:** The EC-1040GB rackmount workstations are heavy devices. When rack mounting the EC-1040GB rackmount workstation, please ensure that at least two people are assisting with the procedure.
- **Anti-static Discharge:** Electronic components like CPU cards and backplanes must be installed into the EC-1040GB rackmount workstation. Follow proper grounding procedures before installing these components.

4.1.2 Installation Prerequisites

Prepare the following before installing the EC-1040GB rackmount workstation:

- **Completely installed CPU card:** The EC-1040GB rackmount workstation CPU card is separately purchased. Before installing the EC-1040GB rackmount workstation, a CPU card should be properly installed. The following components may also have to be installed (refer to the user manual that came with the CPU card):
  - CPU
  - Heatsink and cooling fan
  - Memory modules (DIMMs)
  - Compact flash disks
- **Backplane/Motherboard:** The backplane or motherboard installed in the

EC-1040GB rackmount workstation is separately purchased.

- **Disk Drives:** Disk drives installed into the EC-1040GB rackmount workstation are separately purchased. Disk drive support is CPU card dependent. Before purchasing a CPU card or disk drives, please check the CPU card disk drive support.

4.2 Unpacking

4.2.1 Packaging

When shipped, the EC-1040GB rackmount workstation is wrapped in a plastic bag. Two polystyrene ends are placed on either side of the EC-1040GB rackmount workstation. The workstation is then placed into a first (internal) cardboard box. This box is then sealed and placed into a second (external) cardboard box. The second box is also sealed. A small box containing accessory items is placed within the internal (first) box.

4.2.2 Unpacking Procedure

To unpack the EC-1040GB rackmount workstation, follow the steps below:

NOTE:

The front side LCD screen has a protective plastic cover stuck to the screen. Remove the plastic cover only after the EC-1040GB rackmount workstation has been properly installed. This ensures the screen is protected during the installation process.

Step 1: Use box cutters, a knife or a sharp pair of scissors to open the top of the external (second) box.

Step 2: Open the external (second) box.

Step 3: Use box cutters, a knife or a sharp pair of scissors to open the top of the internal (first) box.

Step 4: Lift the workstation out of the boxes.

Step 5: Remove both polystyrene ends from each side.

Step 6: Pull the plastic cover off the workstation.

Step 7: Make sure all the components listed in the packing list are present.

4.2.3 Packing List

NOTE:

If some of the components listed in the checklist below are missing, please do not proceed with the installation. Contact the IEI reseller or vendor you purchased the AC-KIT-883HD audio module from or contact an IEI sales representative directly. To contact an IEI sales representative, please send an email to sales@iei.com.tw.

When the EC-1040GB rackmount workstation is received, make sure all the components listed below are present.

Quantity	Description	Image
2	**Door key**	
2	**Handle**	

Quantity	Description	Image
2	Handle bracket	
1	Power cable	
2	PS/2 Keyboard/Mouse cable	
1	Screw kit	
1	Utility CD	
1	VGA cable	
For Touch Panel (T-R) Models only		
1	RS-232 cable	

Quantity	Description	Image
1	Touch pen	

Table 4-1: Packing List

4.3 Pre-installation Preparation

4.3.1 System Planning

User supplied CPU cards and backplanes or motherboards need to be installed in the system before installing the EC-1040GB rackmount workstation.

The backplane determines the following system parameters:

- CPU card type
- Expandability

The CPU card determines the following system parameters:

- CPU
- Embedded graphics
- System memory
- HDD, FDD and optical drive connectivity and capacity
- Speed

It is therefore proper to correctly specify the system before the system is installed. This ensures that prudent selections can be made when the system is being developed.

4.3.2 Tools

Before installing the EC-1040GB rackmount workstation, make sure the following tools are on hand:

- Philips (crosshead) screwdriver: All the retention screws on the system are Philips screws.
- Soft working mat: When installing the EC-1040GB rackmount workstation, the

screen should be placed face down on a soft working mat.

4.4 Installation Procedures

4.4.1 Preinstalled Components

The following components are preinstalled in the EC-1040GB rackmount workstation.

- Power supply unit (PSU)
- Cooling fan modules
- Drive brackets
- LCD screen

4.4.2 User Installed Components

The following user supplied components need to be installed into the EC-1040GB rackmount workstation:

- Disk drives
- Backplane and CPU card, or motherboard
- PCI or ISA expansion cards (optional)
- Keyboard

4.4.3 Installation Steps

Complete the following steps to properly install the workstation:

Step 1: Open the top cover.

Step 2: Remove the CPU card clamp.

Step 3: Remove the disk drive brackets.

Step 4: Install the disk drives.

Step 5: Reinstall the disk drive bracket with the installed disk drives.

Step 6: Install the backplane.

Step 7: Install the CPU card.

Step 8: Install the PCI or ISA expansion cards (optional).

Step 9: Connect all required cables.

Step 10: Reinstall the CPU card clamp.

Step 11: Close the top cover.

Step 12: Install the keyboard (optional).

Step 13: Mount the workstation.

4.5 Installing Components into the EC-1040GB

NOTE:

This section gives a generic description of the component installation process for the EC-1040GB rackmount workstation.

WARNING:

Failure to follow the installation procedures outlined in this section may cause severe damage to the EC-1040GB rackmount workstation. Please follow the installation instructions carefully.

4.5.1 Remove the Top Cover

The top cover is secured to the EC-1040GB rackmount workstation with six screws (three each on the left and right panels). To remove the top cover, please follow the steps below.

Step 1: Remove the six top cover retention screws (three each on the left and right panels). (See **Figure 4-1**)

Figure 4-1: Top Cover Left Side Retention Screws (Right Side Similar)

Step 2: Remove the top cover from the chassis to reveal the internal components.

(See **Figure 4-2**)

Figure 4-2: Remove Top Cover from Chassis

4.5.2 Remove the CPU Card Clamp

The CPU card clamp is secured to the EC-1040GB rackmount workstation with four retention screws. To remove the CPU card clamp, please follow the steps below.

Step 1: Remove four retention screws that secure the CPU card clamp to the chassis (**Figure 4-3**).

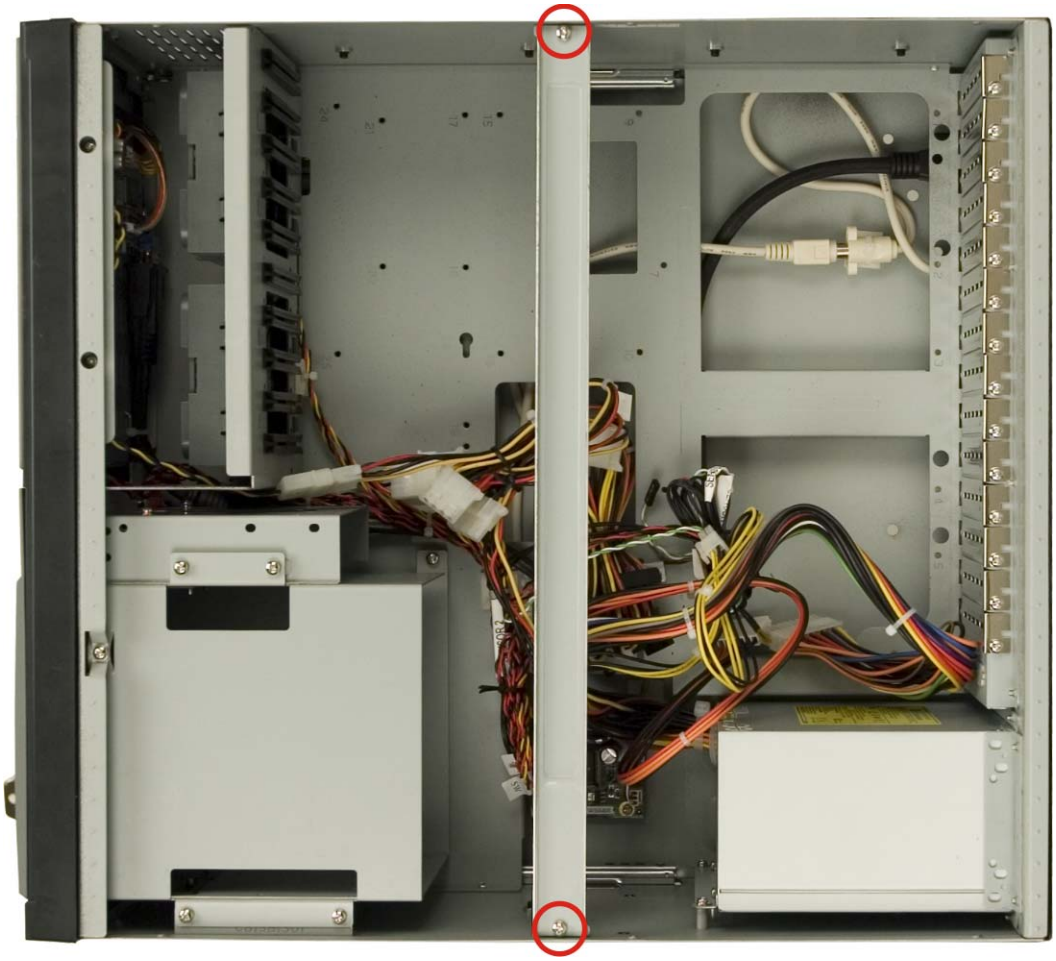

Figure 4-3: CPU Card Clamp Retention Screws

Step 1: Remove the CPU card clamp from the chassis.

4.5.3 Remove the Drive Bracket

The drive bracket is secured to the EC-1040GB rackmount workstation with four retention screws. To remove the drive bracket, please follow the steps below.

Step 1: Remove four retention screws that secure the drive bracket to the chassis (**Figure 4-4**).

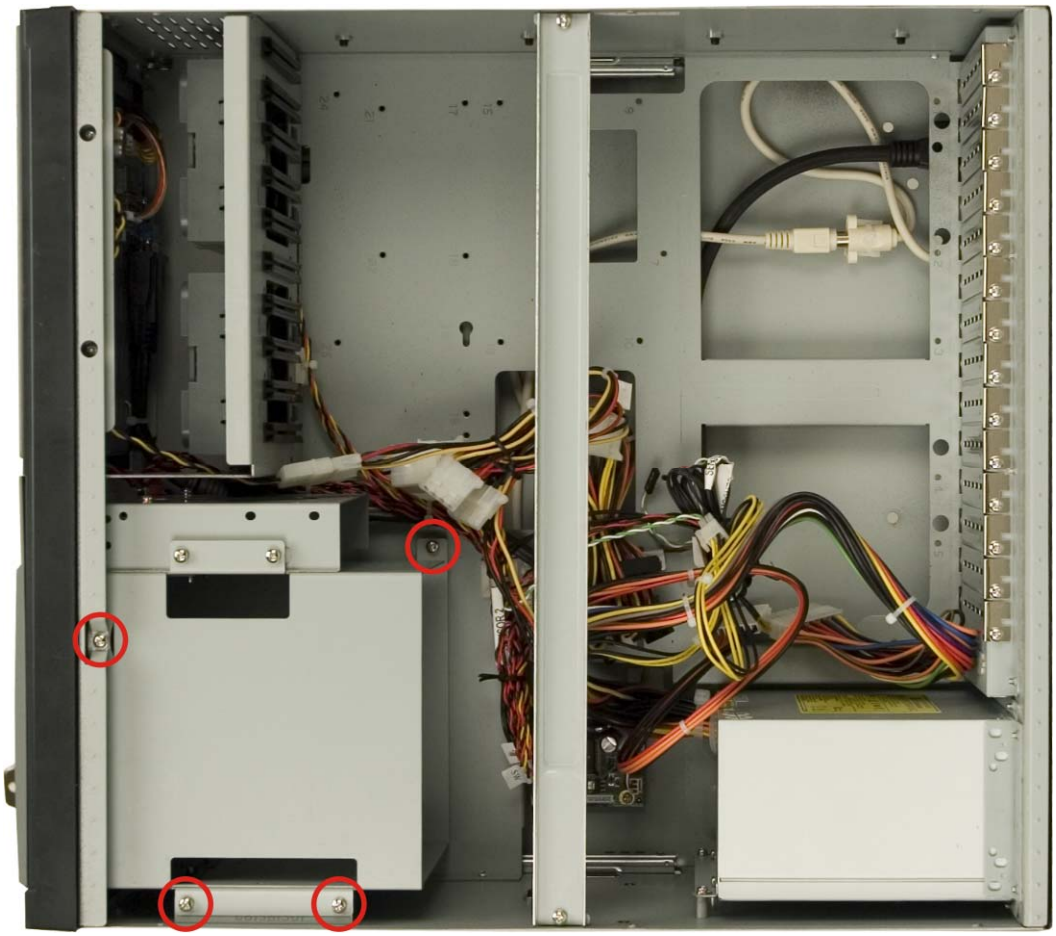

Figure 4-4: Drive Bracket Retention Screws

Step 2: Remove the drive bracket from the chassis.

4.5.4 Remove the Drive Slot Blank Plate

The drive bracket has three 5.25” and one 3.5” drive slot blank plates. To remove the drive slot blank plates, please follow the steps below.

Step 1: Remove the retention screws that secure the drive slot blank plate to the drive bracket (**Figure 4-5**).

Figure 4-5: Drive Slot Blank Plate Retention Screws

Step 2: Remove the drive slot blank plate from the drive bracket.

4.5.5 Remove the 3.5” Drive Bracket

In order to access all the 5.25” drive bay retention screw holes, it is necessary to remove the 3.5” drive bracket. To remove the 3.5” drive bracket, please follow the steps below.

Step 1: Remove the drive bracket from the EC-1040GB rackmount workstation (see **Section 4.5.3**).

Step 2: Remove the retention screws that secure the 3.5” drive bracket to the 5.25” drive bracket (**Figure 4-6**).

Figure 4-6: 3.5” Drive Bracket Retention Screws

Step 3: Remove the 3.5” drive bracket from the 5.25” drive bracket.

4.5.6 Install Drives

4.5.6.1 5.25” Disk Drive

The drive bracket supports three 5.25” disk drives. To install a 5.25” disk drive, follow the instructions below.

Step 1: Remove the drive bracket from the EC-1040GB rackmount workstation (see **Section 4.5.3**).

Step 2: Remove the 3.5” drive bracket from the 5.25” drive bracket (see **Section 4.5.5**).

Step 3: Remove the appropriate drive slot blank plate (see **Section 4.5.4**).

Step 4: Slide the 5.25” disk drive into the drive bracket. Make sure the IDE/SATA connector and the power connector of the drive are facing the rear of the bracket.

Step 5: Insert the appropriate number of retention screws into each side of the 5.25" disk drive through the drive bracket (**Figure 4-7**).

Figure 4-7: 5.25" Disk Drive Retention Screws (Other Side Similar)

4.5.6.2 3.5" Disk Drive in a 5.25" Slot

With the use of IEI's 3.5" to 5.25" drive bay rack, a standard 3.5" disk drive can be installed into a 5.25" drive bay slot. To install a 3.5" hard disk drive into a 5.25" slot of the drive bracket, follow the instructions below.

Step 1: Slide a 3.5" disk drive into a 3.5" to 5.25" drive bay rack. Make sure the IDE/SATA connector and the power connectors of the drive are facing the rear of the rack.

Step 2: Insert the appropriate number of retention screws into each side of the 3.5" disk drive through the 3.5" to 5.25" drive bay rack (**Figure 4-8**).

Figure 4-8: 3.5” to 5.25” Drive Bay Rack Retention Screws

Step 3: Remove the drive bracket from the EC-1040GB rackmount workstation (see **Section 4.5.3**).

Step 4: Remove the 3.5” drive bracket from the 5.25” drive bracket (see **Section 4.5.5**).

Step 5: Install the 3.5” to 5.25” drive bay rack into the drive bracket (see **Section 4.5.6**)

4.5.6.3 3.5” Disk Drive

To install a 3.5” disk drive, follow the instructions below.

Step 1: Remove the drive bracket from the EC-1040GB rackmount workstation (see **Section 4.5.3**).

Step 2: Remove the 3.5” drive slot blank plate (see **Section 4.5.4**).

Step 3: Slide a 3.5” disk drive into the 3.5” drive bracket. Make sure the IDE/SATA connector and the power connectors of the drive are facing the rear of the drive bracket.

Step 4: Insert the appropriate number of retention screws into each side of the 3.5” disk drive through the 3.5” drive bracket (**Figure 4-9**).

Figure 4-9: 3.5” Disk Drive Retention Screws

4.5.7 Reinstall the Drive Brackets

After the drives have been installed, reinstall the drive brackets into the chassis.

NOTE:

It might be easier to connect the disk drive IDE/SATA connectors to the ribbon cables and the disk drive power connectors to the PSU before the drive brackets are reinstalled into the chassis.

Step 1: Remount the drive brackets in the original position they were removed from.

Step 2: Make sure all drive bracket retention screw holes are properly aligned with the corresponding retention screw holes in the workstation.

Step 3: Reinsert all drive bracket retentions screws.

4.5.8 Install the Backplane

To install a backplane, follow the instructions below.

Step 1: Install the correct amount of copper pillars into the base of the chassis

(**Figure 4-10**).

NOTE:

The backplane shown in **Figure 4-10** is an example for reference only. The location and number of copper pillars depends on the backplane being used.

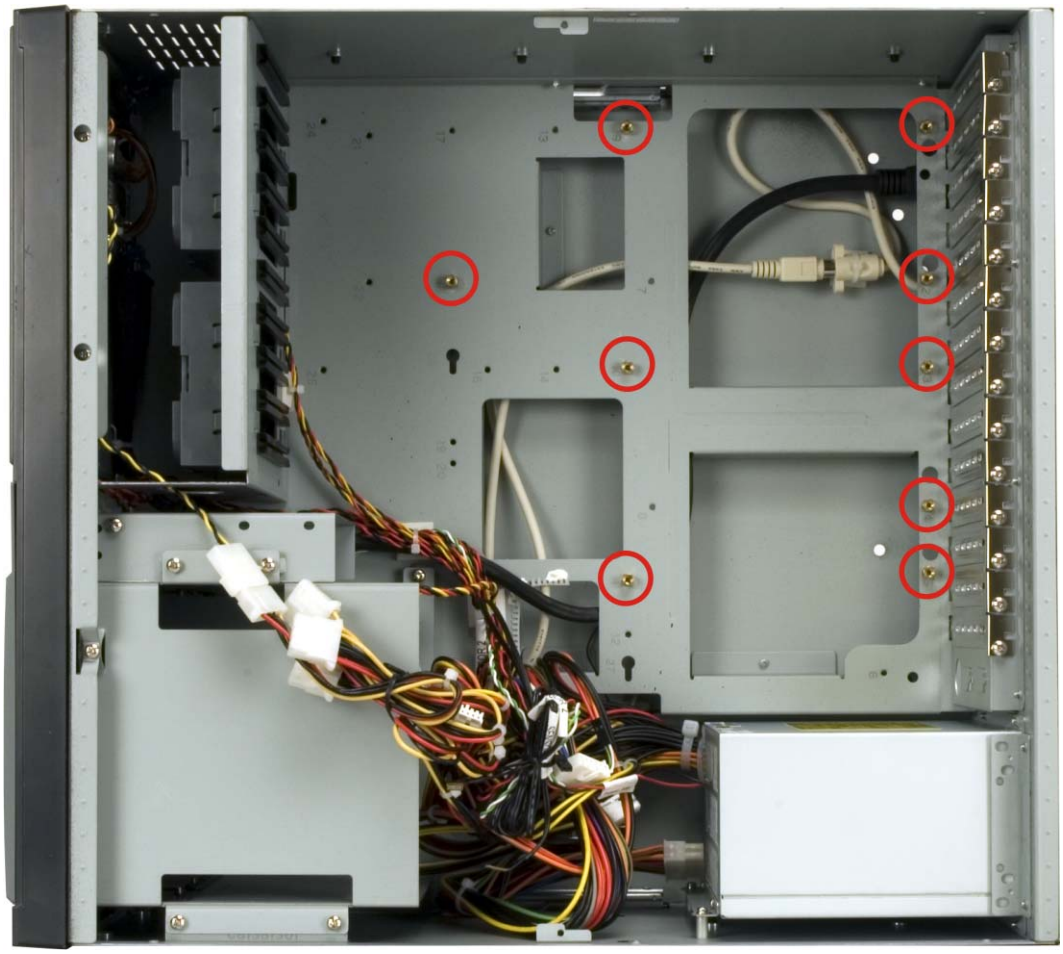

Figure 4-10: Install Copper Pillars

Step 2: Mount the backplane into the chassis. Make sure the backplane is positioned so that when the CPU card and PCI/ISA expansion cards are installed, both the CPU card and the PCI/ISA card I/O connectors face the I/O brackets on the rear panel.

Step 3: Align the retention screw holes in the backplane with the copper pillars installed in **Step 1**.

Step 4: Insert retention screws to secure the backplane to the chassis (**Figure 4-11**)

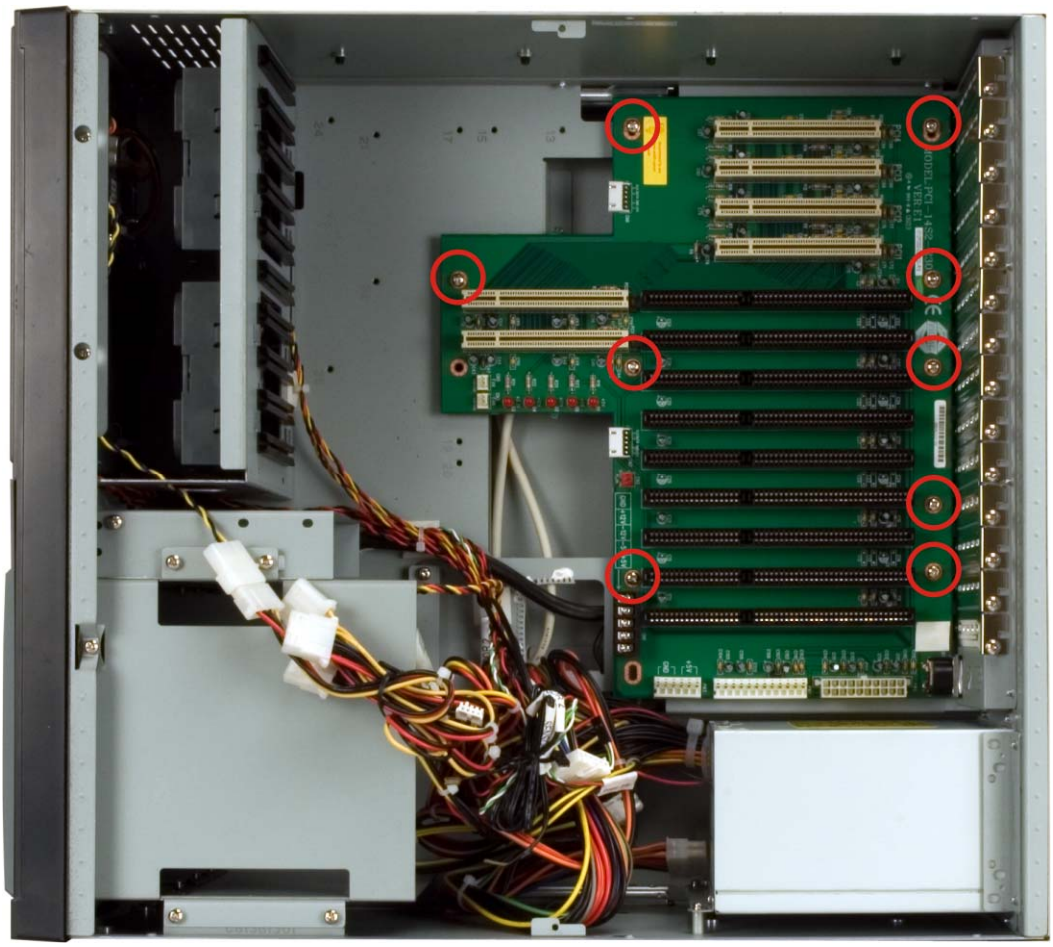

Figure 4-11: Backplane Retention Screws

4.5.9 Install the CPU Card

CAUTION

Before a CPU card is inserted into the backplane, make sure the CPU card has been correctly prepared and that all the CPU card jumper settings are configured correctly. For CPU card component installation procedures, please refer to the user manual that came with the CPU card.

CAUTION

Depending on the location of the CPU card, the disk drive ribbon cable connectors and other peripheral device cable connectors may have to be connected to the CPU card before it can be installed.

To install a CPU card onto the backplane, follow the instructions below:

Step 1: Remove the slot bracket from the chassis rear panel by removing the slot cover retention screw (**Figure 4-12**).

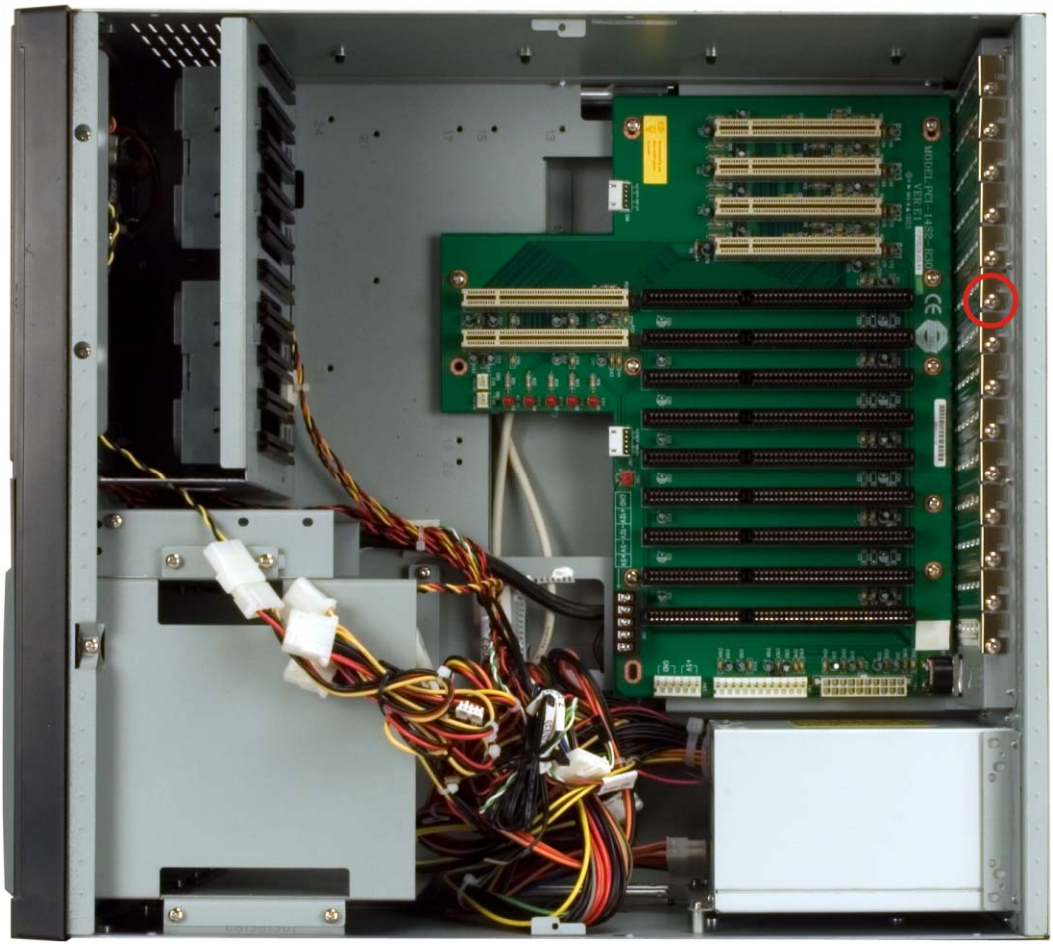

Figure 4-12: Slot Cover Retention Screw

Step 2: Remove the CPU card clamp. (See **Section 4.5.2**)

Step 3: Slide the CPU card into the reserved PCI/ISA socket on the backplane. Make sure the back edge of the CPU card slides into the plastic guide rails at the front end of the chassis.

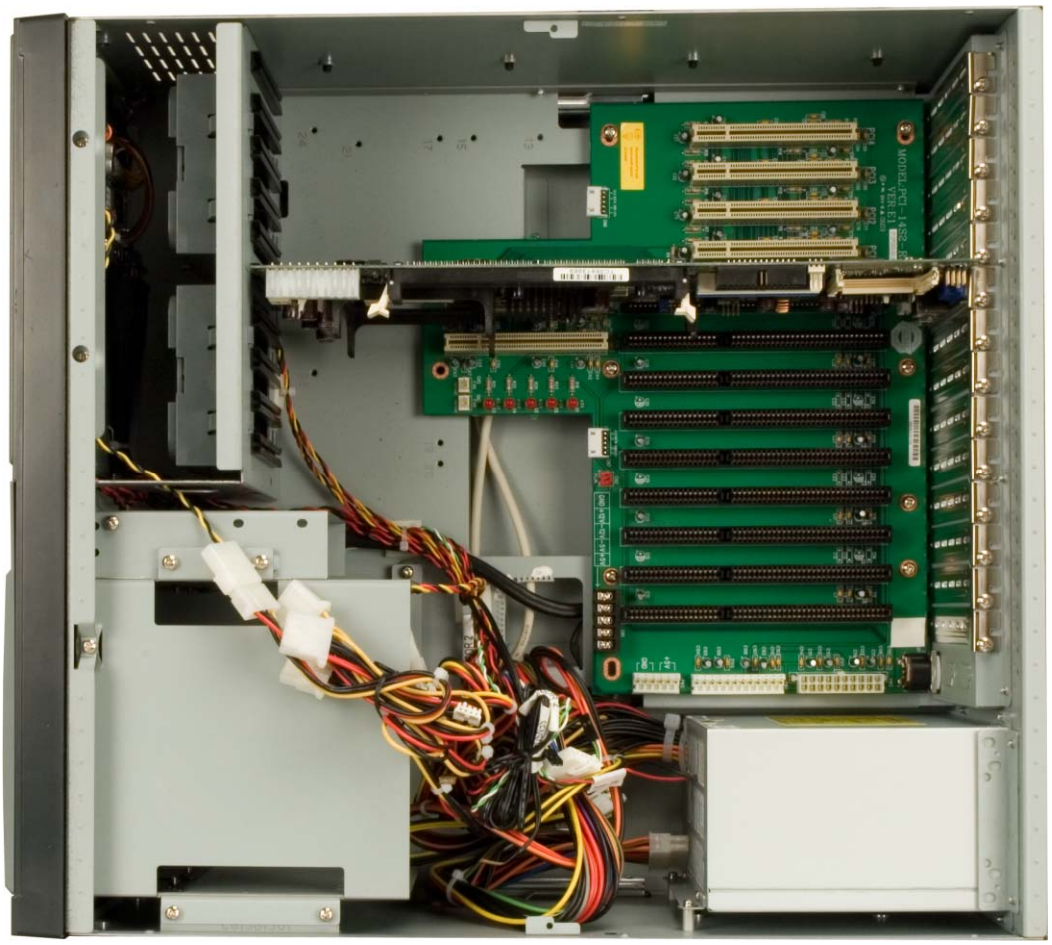

Figure 4-13: Install the CPU Card

Step 4: To secure the CPU card, reinsert the previously removed slot cover retention screw.

Step 5: If a PCI/ISA expansion card is not being installed, reinstall the hold down clamp. If a PCI/ISA expansion card is being installed, proceed to the next section.

4.5.10 Install the PCI/ISA Expansion Card

To install a PCI expansion card or an ISA expansion card please follow the instructions below.

Step 1: Remove the slot cover at the back of the chassis. To do this, remove the slot cover retention screw at the top of the slot cover.

Step 2: If necessary, remove the CPU card clamp. (See **Section 4.5.2**)

Step 3: Slide the PCI/ISA expansion card into the reserved PCI/ISA socket on the backplane.

Step 4: To secure the PCI/ISA expansion card, reinsert the previously removed slot cover retention screw and reinstall the hold down bar.

4.5.11 Connect the Cables

The following cables may have to be connected depending on the CPU board and the backplane installed in the system:

- PSU cables must be connected to the following components (if installed):
  - CPU card
  - Backplane
  - FDD
  - HDD
  - Optical drive
- Disk drive ribbon cables must be connected to the corresponding CPU card disk drive connectors.

Other connections may have to be made; please refer to the documentation that came with the CPU card.

4.5.12 Close the Top Cover

Before closing the top cover, make sure the following items have been completed:

- The backplane is properly installed
- The CPU card is properly installed
- The PCI/ISA expansion cards are properly installed
- The disk drives are properly installed into the drive brackets
- The drive brackets are properly reinstalled into the workstation
- All cables are properly connected

If all of the above listed items have been properly installed, close the top cover and reinsert the previously removed retention screws.

4.5.13 Install Optional Keyboard

To install the optional keyboard, please follow the steps below.

Step 1: Remove the cover from the keyboard bay.

Step 2: Insert the keyboard slide rails into the keyboard bay while carefully routing the PS/2 connector along the bottom panel of the workstation to the internal PS/2 keyboard connector until the entire keyboard assembly locks into place.

Step 3: Connect the keyboard PS/2 connector to the internal PS/2 connector (**Figure 4-14**).

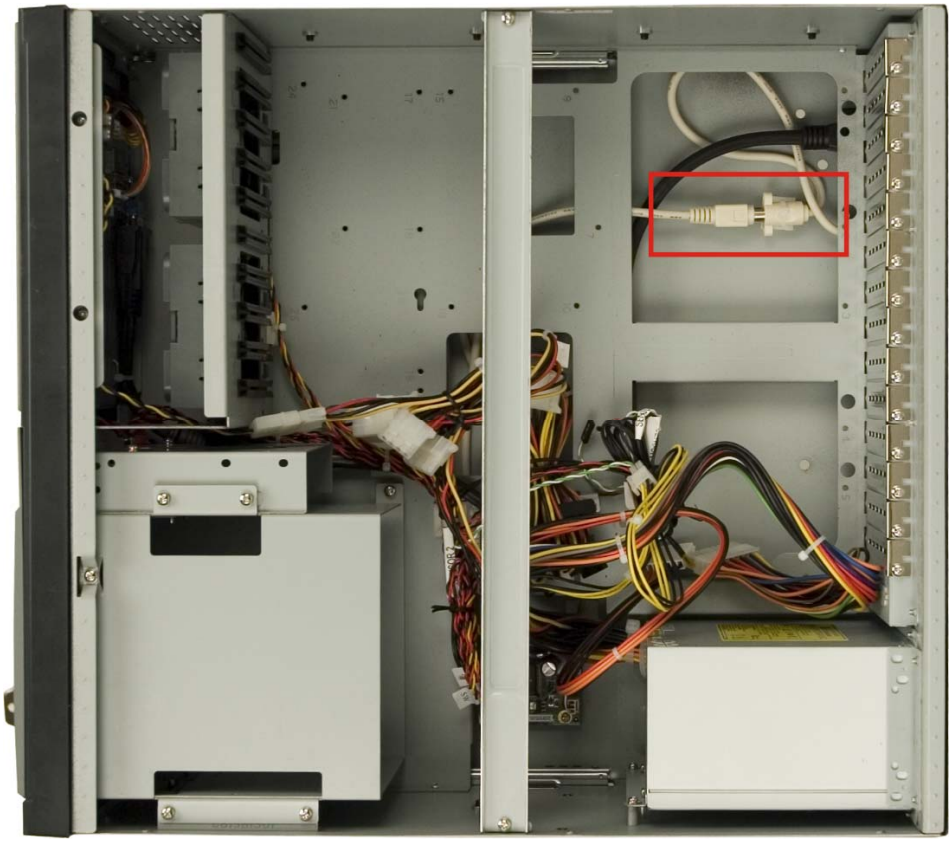

Figure 4-14: Internal PS/2 Connector

Step 4: Insert four retention screws, two each on the left and right side panels, to secure the keyboard to the workstation (**Figure 4-15**).

Figure 4-15: Keyboard Retention Screws

4.6 Mounting the EC-1040GB Rackmount Workstation

The EC-1040GB workstation can be mounted to the posts of a standard 19” rack cabinet. Adequate rails, rack tray, or side brackets should also be available for supporting the weight of the workstation. Make sure that all cabling is correctly attached and carefully routed when installing the workstation.

NOTE:

At least two people are required to mount the workstation. The rack or cabinet into which the workstation is installed should provide adequate and sufficient ventilation, grounding, power source, and stability features.

NOTE:

This section gives a generic description of the rack mounting process for the EC-1040GB rackmount workstation. Alternate rack mounting systems may require different mounting procedures. Be sure to follow the manufacturer’s instructions when mounting the workstation.

To rack mount the workstation, please follow the steps below.

Step 1: The left and right side panels of the workstation each have four screw holes for rack handle bracket installation. Assemble the rack handle brackets and secure them to the workstation. (See **Figure 4-16**)

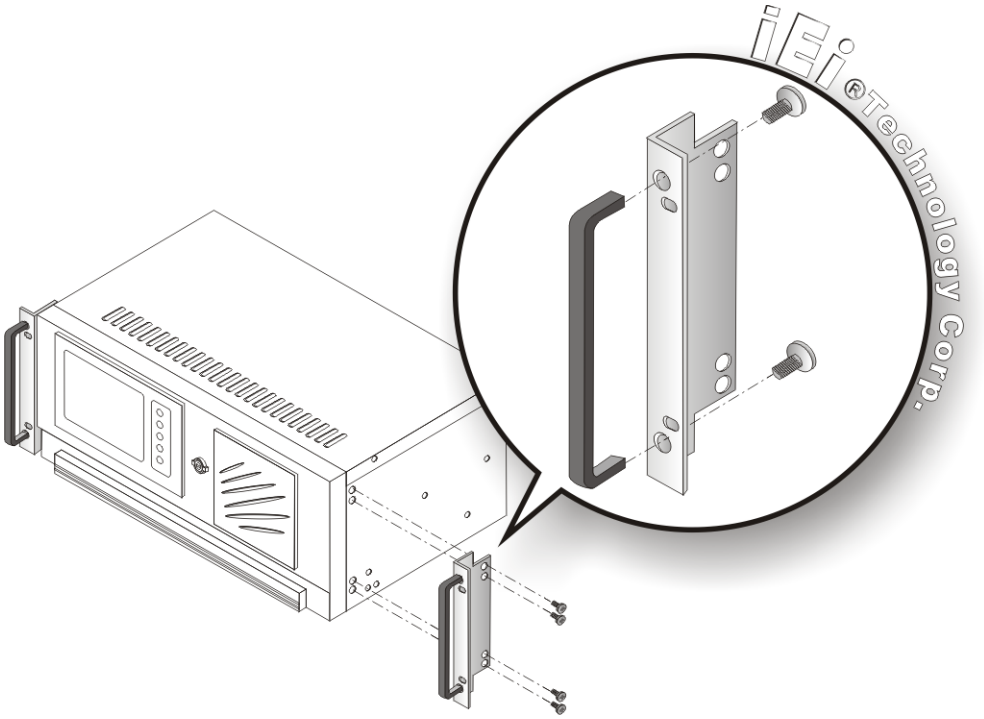

Figure 4-16: Rack Handle Bracket Assembly and Installation

Step 2: Remove the rack slides from the rack slide brackets. (See **Figure 4-17**)

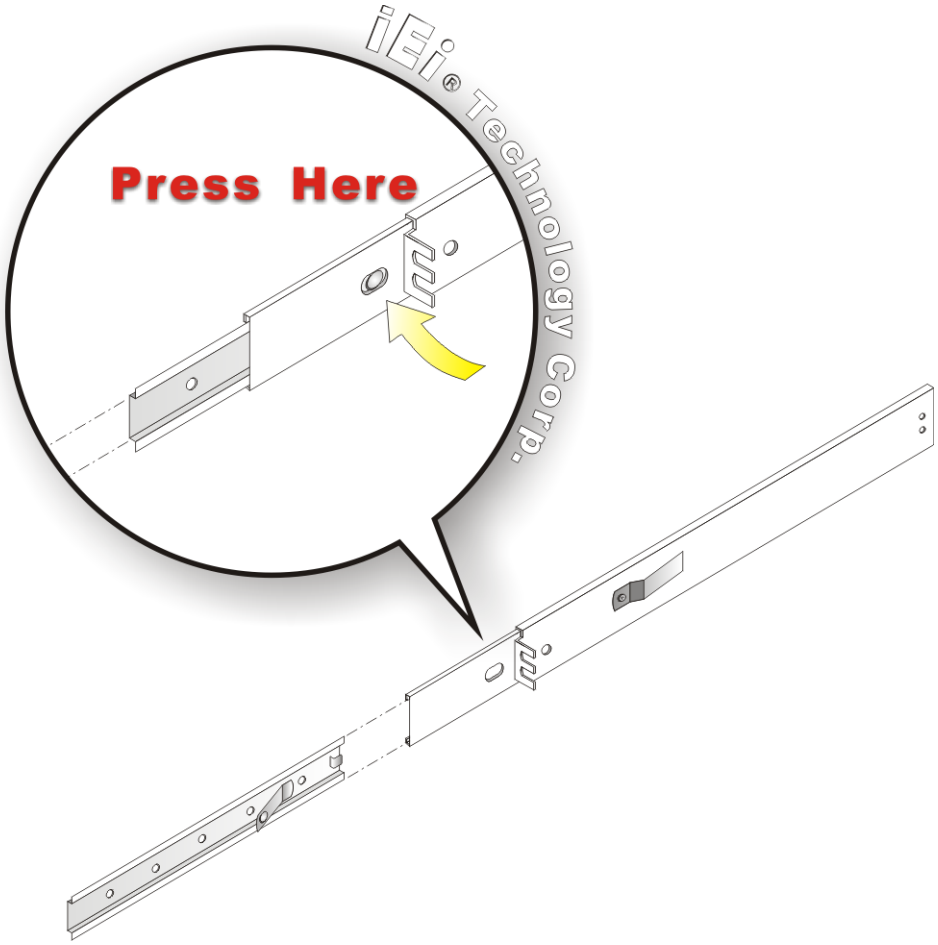

Figure 4-17: Remove Rack Slide

Step 3: The left and right side panels of the workstation each have five screw holes for rack slides. Attach one slide section each to the left and right side panel of the workstation. (See **Figure 4-18**)

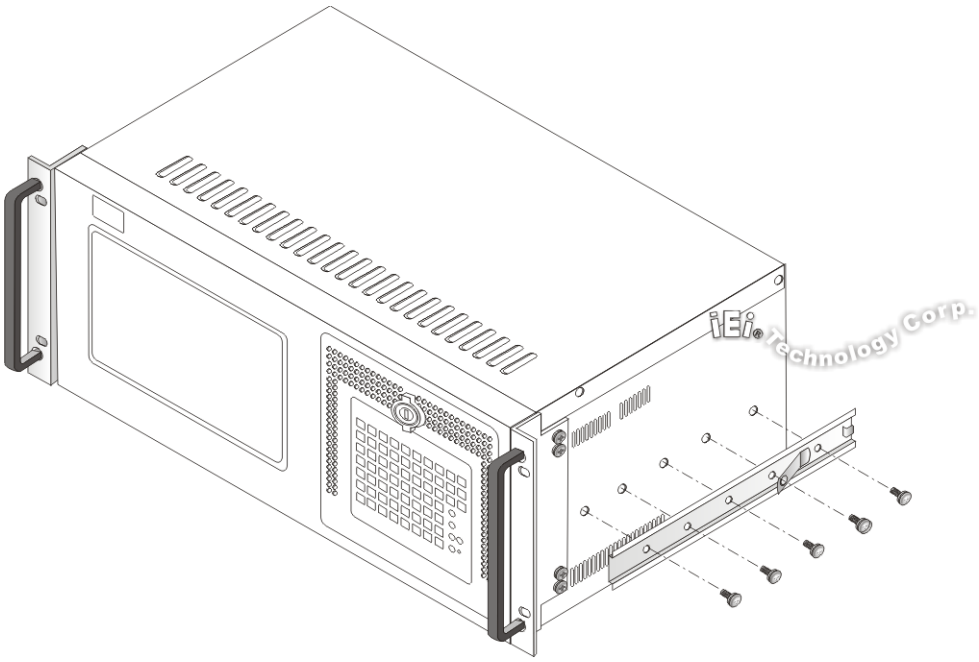

Figure 4-18: Workstation Slide Installation (Other Side Similar)

Step 4: Assemble the slide brackets per the manufacturer's instructions.

(See **Figure 4-19**)

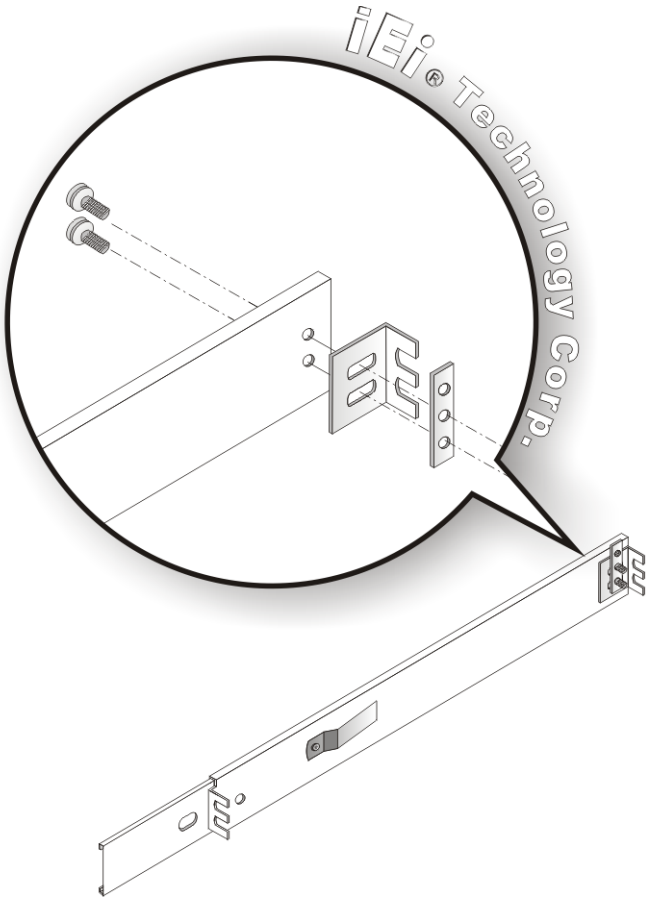

Figure 4-19: Rack Slide Bracket Assembly

Step 5: Attach the slide brackets to the rack per the manufacturer's instructions.

(See **Figure 4-20**)

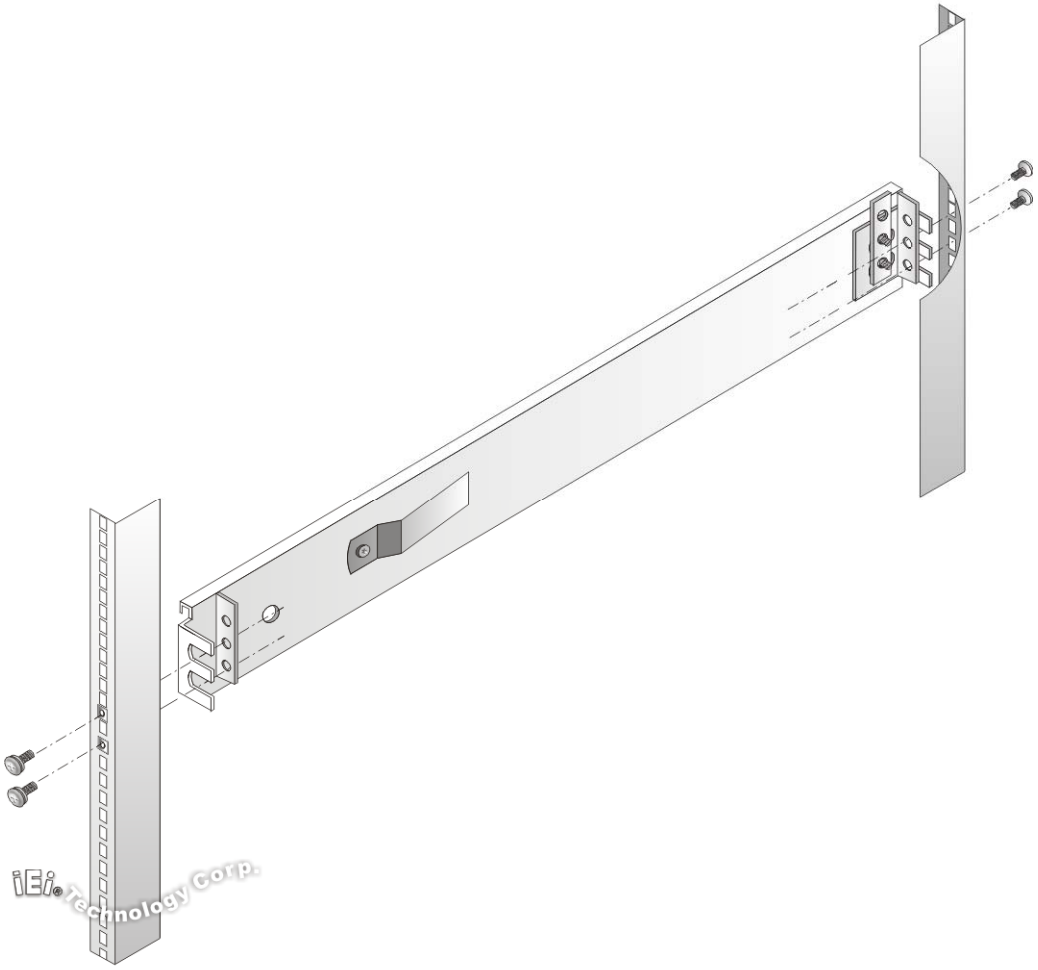

Figure 4-20: Rack Slide Bracket Installation

Step 6: Insert the workstation with the attached slides into the rack slide brackets until the handle brackets are flush against the rack. (See **Figure 4-21**)

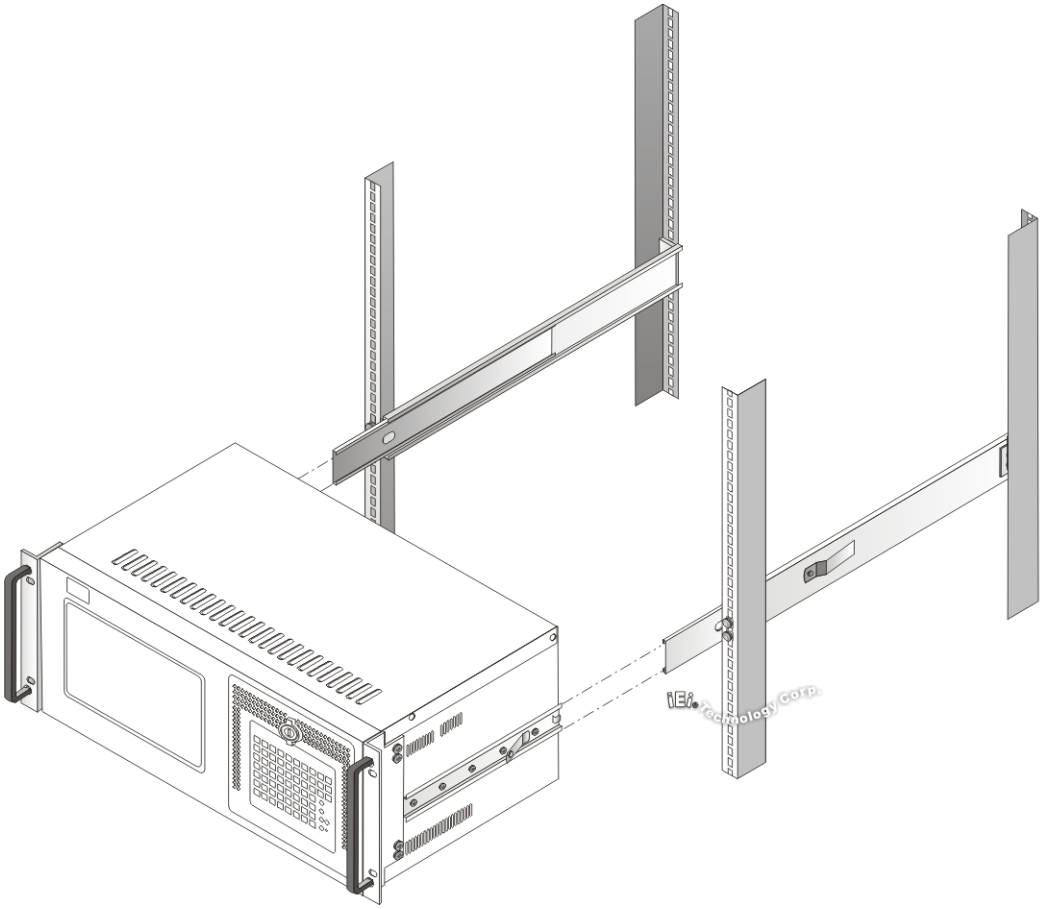

Figure 4-21: Install Workstation into Rack

Step 7: If necessary, secure the workstation handle brackets to the rack with the fasteners that came with the workstation.

Chapter

5

Maintenance

5.1 Maintenance Overview

Maintaining the EC-1040GB rackmount workstation is essential for the smooth operating of system applications. Maintaining the system might mean replacing failed components during the lifetime of the workstation. The following EC-1040GB components can be replaced.

- CPU card
- PCI/ISA expansion card
- Backplane
- Power supply unit (PSU)
- Cooling fans
- Disk drives
  - 3.5”
  - 5.25”

WARNING:

Never attempt to remove the external panels or access any internal components of the workstation while it is connected to a power source. Always be sure to turn off and disconnect the workstation from all power sources before attempting to access the internal components. Failure to do so may seriously injury to the user or cause irreparable damage the internal components of the workstation.

5.2 CPU Card Replacement

To replace a CPU card, please follow the instructions below.

Step 1: Turn off and disconnect the workstation from all power sources.

Step 2: Remove the workstation from the rack in which it is installed.

Step 3: Open the top cover of the EC-1040GB rackmount workstation. (See **Section 4.5.1**)

Step 4: Disconnect all internal and external peripheral device connections from the CPU card.

Step 5: Remove the CPU card clamp. (See **Section 4.5.2**)

Step 6: Remove the retention screw that secures the CPU card to the slot on the rear panel.

Step 7: Slide the CPU card out of the workstation.

Step 8: Install a new CPU card. (See **Section 4.5.9**)

Step 9: Reinstall the CPU card clamp.

Step 10: Reinstall the top cover of the workstation. (See **Section 4.5.9**)

Step 11: Reinstall the workstation into the rack. Refer to **Section 4.6** for complete mounting instructions.

5.3 PCI/ISA Expansion Card Replacement

To replace a PCI/ISA expansion card, please follow the instructions below.

Step 1: Turn off and disconnect the workstation from all power sources.

Step 2: Remove the workstation from the rack in which it is installed.

Step 3: Open the top cover of the EC-1040GB rackmount workstation. (See **Section 4.5.1**)

Step 4: Disconnect all internal and external peripheral device connections from the PCI/ISA expansion card.

Step 5: Remove the CPU card clamp. (See **Section 4.5.2**)

Step 6: Remove the retention screw that secures the PCI/ISA expansion card to the slot on the rear panel.

Step 7: Slide the PCI/ISA expansion card out of the workstation.

Step 8: Install a new PCI/ISA expansion card. (See **Section 4.5.9**)

Step 9: Reinstall the CPU card clamp.

Step 10: Reinstall the top cover of the workstation. (See **Section 4.5.9**)

Step 11: Reinstall the workstation into the rack. Refer to **Section 4.6** for complete mounting instructions.

5.4 Backplane Replacement

To replace a backplane, please follow the instructions below.

Step 1: Turn off and disconnect the workstation from all power sources.

Step 2: Remove the workstation from the rack in which it is installed.

Step 3: Open the top cover of the EC-1040GB rackmount workstation. (See **Section 4.5.1**)

Step 4: Remove the CPU card clamp. (See **Section 4.5.2**)

Step 5: Disconnect and remove all CPU cards (see **Section 4.5.9**) and PCI/ISA expansion cards (see **Section 4.5.10**).

Step 6: Remove the retention screws that secure the backplane to the workstation (see **Section 4.5.8**).

Step 7: Install a new backplane into the chassis.

Step 8: Reinstall and reconnect all CPU cards (see **Section 4.5.9**) and PCI/ISA expansion cards (see **Section 4.5.10**).

Step 9: Reinstall the CPU card hold down bar.

Step 10: Close the back cover of the workstation and reinstall the workstation into the cabinet or rack in which it was previously installed. Refer to **Section 4.6** for complete mounting instructions.

5.5 PSU Replacement

To replace a PSU, please follow the instructions below.

Step 1: Turn off and disconnect the workstation from all power sources.

Step 2: Remove the workstation from the rack in which it is installed.

Step 3: Open the top cover of the EC-1040GB rackmount workstation. (See **Section 4.5.1**)

Step 4: Disconnect all the PSU cables from their devices.

Step 5: Remove the three external retention screws that secure the PSU assembly to the rear panel of the workstation (**Figure 5-1**).

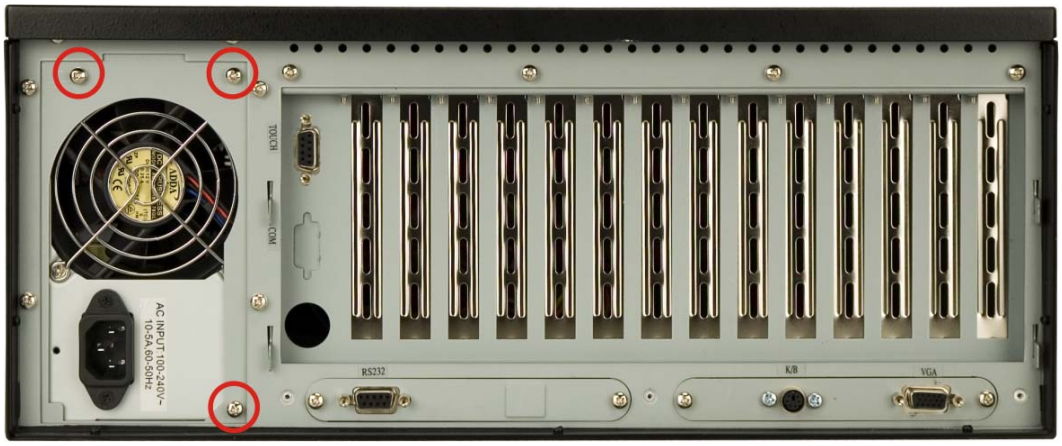

Figure 5-1: PSU External Retention Screws

Step 6: Remove the two internal retention screws that secure the PSU assembly to the right side panel of the workstation (**Figure 5-2**).

Figure 5-2: PSU Internal Retention Screws

Step 7: Remove the two retention screws on the PSU mounting bracket (**Figure 5-3**).

Figure 5-3: PSU Mounting Bracket Retention Screws

Step 8: Reattach the PSU mounting bracket to the new PSU with the two previously removed retention screws.

Step 9: Install the new PSU into the workstation making sure the PSU power connector and PSU cooling fan are facing out of the workstation.

Step 10: Reinsert the two previously removed internal retention screws that secure the PSU assembly to the right side panel of the workstation.

Step 11: Reinsert the three previously removed external retention screws that secure the PSU assembly to the rear panel of the workstation.

Step 12: Close the back cover of the workstation and reinstall the workstation into the cabinet or rack in which it was previously installed. Refer to **Section 4.6** for complete mounting instructions.

5.6 Cooling Fan Replacement

To replace a cooling fan, please follow the instructions below.

CAUTION:

Carefully note the direction and orientation of the existing cooling fan prior to replacement.

Step 1: Turn off and disconnect the workstation from all power sources.

Step 2: Remove the workstation from the rack in which it is installed.

Step 3: Open the top cover of the EC-1040GB rackmount workstation.

(See **Section 4.5.1**)

Step 4: Disconnect the cooling fan from the PSU.

Step 5: Remove the defective cooling fan by pressing down on the two spring clips that lock the fan into place until the fan is release from the CPU card slot bracket and can be pulled out of the workstation. (See **Figure 5-4**)

Figure 5-4: Cooling Fan Spring Clips

Step 6: Install the new cooling fan.

Step 7: Connect the new cooling fan to the PSU.

Step 8: Close the top cover of the workstation and reinstall the workstation into the cabinet or rack in which it was previously installed. Refer to **Section 4.6** for complete mounting instructions.

5.7 Disk Drive Replacement

5.7.1 3.5” Disk Drive Replacement

To replace a 3.5” disk drive, please follow the instructions below.

Step 1: Turn off and disconnect the workstation from all power sources.

Step 2: Remove the workstation from the rack in which it is installed.

Step 3: Open the top cover of the EC-1040GB rackmount workstation. (See **Section 4.5.1**)

Step 4: Disconnect all cabling from every hard drive.

Step 5: Remove the drive bracket (see **Section 4.5.3**).

Step 6: Remove the retention screws that secure the 3.5” disk drive to the drive bracket and slide the drive out of the bracket.

Step 7: Install the new 3.5” disk drive. (See **Section 4.5.6.3**)

Step 8: Reinstall the drive bracket to the workstation. (See **Section 4.5.7**)

Step 9: Reconnect all disk drive cabling.

Step 10: Close the top cover of the workstation and reinstall the workstation into the cabinet or rack in which it was previously installed. Refer to **Section 4.6** for complete mounting instructions.

5.7.2 5.25” Disk Drive Replacement

To replace a 5.25” disk drive, please follow the instructions below.

NOTE:

These instructions are also applicable for replacement of a 3.5” disk drive mounted in a 5.25” disk drive adapter bracket. Refer to **Section 4.5.6.2** for instructions on installing a 3.5” disk drive into a 5.25” drive bay slot.

Step 1: Turn off and disconnect the workstation from all power sources.

Step 2: Remove the workstation from the rack in which it is installed.

Step 3: Open the top cover of the EC-1040GB rackmount workstation. (See **Section 4.5.1**)

Step 4: Disconnect all cabling from every hard drive.

Step 5: Remove the drive bracket (See **Section 4.5.3**).

Step 6: Remove the 3.5” drive bracket (See **Section 4.5.5**).

Step 7: Remove the retention screws that secure the 5.25” disk drive to the drive bracket and slide the drive out of the bracket.

Step 8: Install the new 5.25” disk drive. (See **Section 4.5.6.1**)

Step 9: Reinstall the drive bracket to the workstation. (See **Section 4.5.7**)

Step 10: Reconnect all disk drive cabling.

Step 11: Close the top cover of the workstation and reinstall the workstation into the cabinet or rack in which it was previously installed. Refer to **Section 4.6** for complete mounting instructions.

Chapter

6

On Screen Display (OSD) Controls

6.1 User Mode OSD Structure

6.1.1 OSD Buttons

There are several on-screen-display (OSD) control buttons oriented vertically along the right hand side of the LCD screen. **Figure 6-1** shows the arrangement of OSD control buttons.

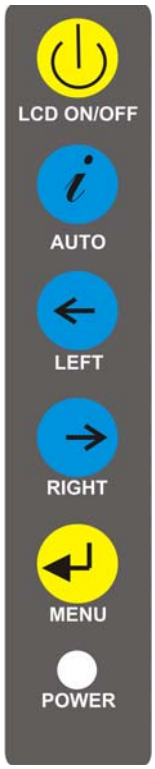

Figure 6-1: OSD Control Buttons

NOTE:

Pressing the direction keys (LEFT or RIGHT) can bring out a simple menu to adjust the LCD screen brightness and contrast values.

6.1.2 OSD Menu Structure

Table 6-1 shows the OSD menu structure.

Level 0	Level 1	Value
Color	Contrast	0 to 100
	Brightness	0 to 255
	Color Adjust	0 to 255
	Color Temp	9300 6500 5800 sRGB USER
	Back	
Image Setting	Clock	0 to 100
	Phase	0 to 63
	Gamma	0, 1, 2, 3
	Sharpness	0, 1, 2, 3, 4
	Back	
Position	H Position	0 to 200
	V Position	0 to 36
	Back	
OSD Menu	OSD H Position	0 to 200
	OSD V Position	0 to 200
	OSD Timer	0 to 27
	Back	
Language Menu	English	Select
	French	
	German	
	Spanish	
	Traditional Chinese	
	Simplified Chinese	
	Japanese	
Misc.	Signal Source	Select

Level 0	Level 1	Value
	Reset	
	Info.	
	Back	
Exit		

Table 6-1: OSD Menu Structure

6.1.3 Main Menu

The main menu is shown in **Figure 6-2**.

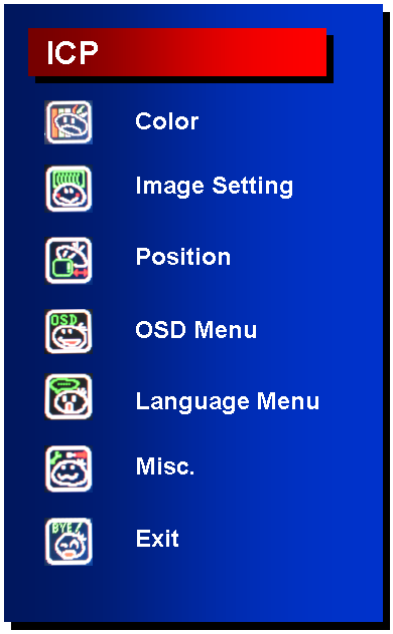

Figure 6-2: Main Menu

All sub-menus accessible from the main menu are further described in the sections below.

6.1.4 Color Menu

Color menu options are shown in **Figure 6-3**.

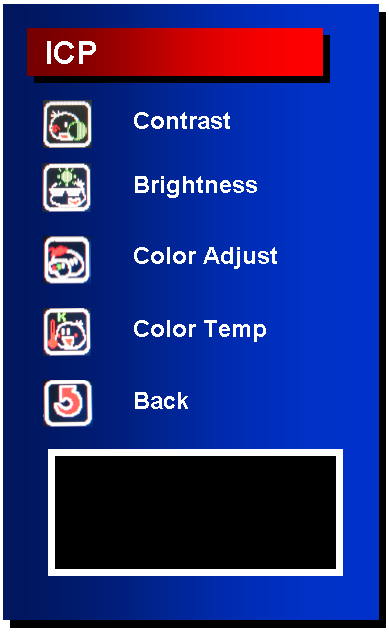

Figure 6-3: Color Menu

The **Color** menu adjusts the brightness and contrast and fine-tunes the palette of color hues for the LCD.

- Contrast:

  Adjusting this value too high or too low will worsen the quality of image.
- Brightness:

  Setting this value too high or too low will affect the quality of image.
- Color Adjust:

  Adjusts the color of user mode settings.
- Color Temperature:

  9300: NTSC standard Kelvin

  6500: NTSC standard Kelvin

  5800: NTSC standard Kelvin

  sRGB: Sets the color temperature to sRGB

  User: Sets the color temperature to User
- Back:

  This item returns to the main menu.

6.1.5 Image Setting Menu

Image Setting menu options are shown in **Figure 6-4**.

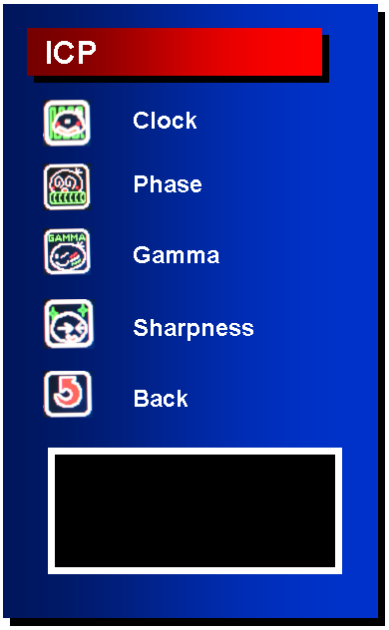

Figure 6-4: Image Setting Menu

The **Image Setting** menu adjusts the display signal settings.

- Clock:

  This option adjusts the display width.
- Phase:

  This option adjusts the input signal and dot clock position (Analog only).
- Gamma:

  Adjusts the gamma level to one of the 4 preset values.
- Sharpness:

  Adjusts the sharpness level to one of the 5 preset values. This option may help reducing the softening edges around displayed objects.
- Back:

  This item returns to the main menu.

6.1.6 Position Menu

The **Position** menu options are shown in Figure 6-5.

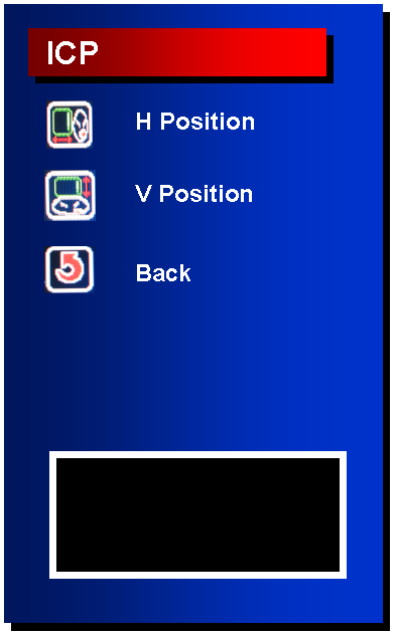

Figure 6-5: Image Menu

The **Position** menu adjusts the screen position options.

- H Position:

  This item adjusts the horizontal position of the display screen.
- V Position:

  This item adjusts the vertical position of the display screen.
- Back:

  This item returns to the main menu.

6.1.7 OSD Menu

The **OSD** menu is shown in Figure 6-6.

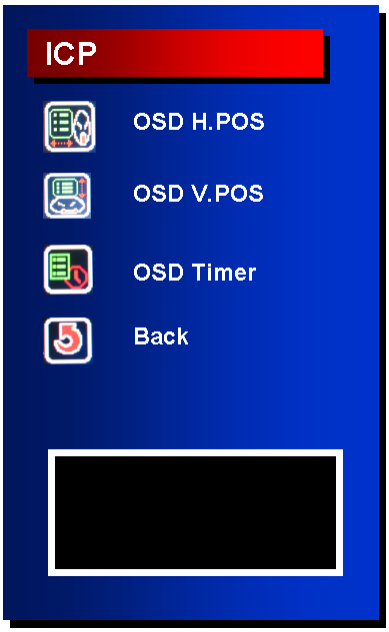

Figure 6-6: OSD Menu

The **OSD** menu adjusts the OSD screen options.

- OSD H Position:

  This item adjusts the horizontal position of the OSD display screen.
- OSD V Position:

  This item adjusts the vertical position of the OSD display screen.
- OSD Timer:

  This item adjusts how many seconds the OSD screen stays visible before it disappears when OSD is left unattended.
- Back:

  This item returns to the main menu.

6.1.8 Language Menu

The **Language** menu options are shown in **Figure 6-7**.

Figure 6-7: Language Menu

The **Language** menu provides options for selecting OSD screens in a preferred language.

6.1.9 Misc. Menu

The **Misc.** menu options are shown in **Figure 6-8**.

Figure 6-8: Misc. Menu

The **Misc.** menu has the following options.

- Signal Source:

  This item enables manual selection of the type of graphic source input, i.e., analog (15-pin VGA) or digital (DVI-D).
- Reset:

  This item resets the display to factory default.
- Info:

  This item displays information on the screen resolution.
- Back:

  This item returns to the main menu.

Chapter

8

A106 Utility

7.1 A106 Utility Overview

The EC-1040GB workstation has a preinstalled A106 alarm board. The main function of the A106 alarm board is to check whether the temperatures in the chassis and the speed of the fans is normal. It also monitors the system via an external Watchdog timer providing feedback as to whether the system is working properly or has dropped halt.

The A106 alarm board is connected to several critical system components as well as the front panel LEDs and buzzer to notify the user in case of system fan failure or if high temperatures are sensed in the workstation.

For more information on programmable features of the A106 alarm board, refer to the documentation contained on the utility CD included with the workstation.

Figure 8-1 shows the cabling of the workstation components to the A106 alarm board.

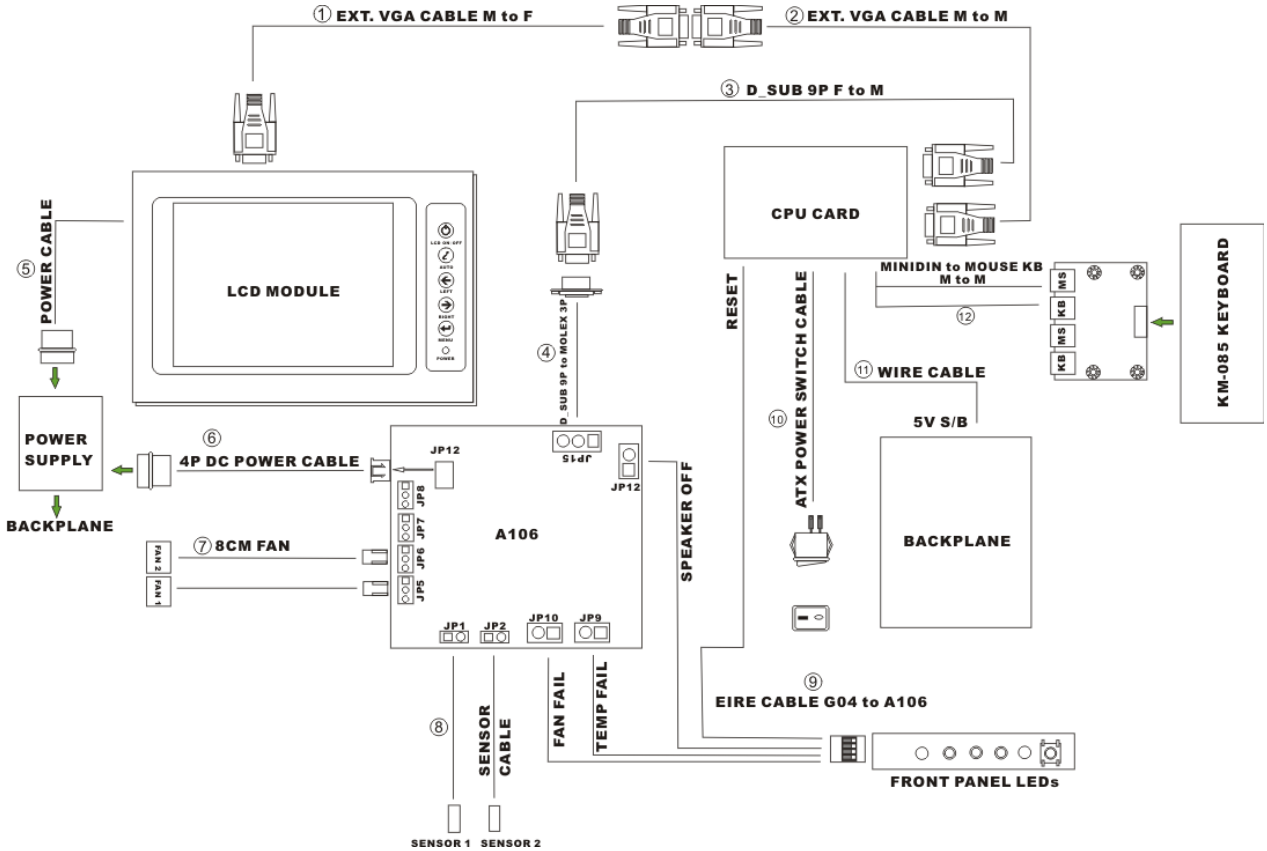

Figure 7-1: A106 Alarm Board Cabling

Appendix

A

Certifications

A.1 RoHS Compliant

All EC-1040GB rackmount workstations comply with the Restriction of Hazardous Materials (RoHS) Directive. This means that all components used to build the industrial workstations and the workstation itself are RoHS compliant.

The RoHS Directive bans the placing on the EU market of new electrical and electronic equipment containing more than agreed levels of lead, cadmium, mercury, hexavalent chromium, polybrominated biphenyl (PBB) and polybrominated diphenyl ether (PBDE) flame retardants.

Appendix

B

Recommended IEI Backplanes, Motherboards and PSUs

The following IEI backplanes, motherboards and power supply units are recommended for the EC-1040GB rackmount workstation. For more information about these backplanes please contact an IEI sales representative or visit the IEI website (www.ieiworld.com).

B.1 Recommended IEI Backplanes and Motherboards

The following table lists the recommended IEI backplanes and motherboards for the EC-1040GB rackmount workstation.

Model No.	SBC Type	PCI	ISA	PCIe			PSU Connector
				X1	X4	X16	
PCI-13SD-RS-R30	PICMG 1.0	3 + 4	3 + 3	0	0	0	AT/ATX
PCI-14S2-RS-R30	PICMG 1.0	4	8	0	0	0	AT/ATX
PCI-14S3-RS-R30	PICMG 1.0	4	9	0	0	0	AT/ATX
PX-14S3-RS-R30	PICMG 1.0	12	2	0	0	0	AT/ATX
PX-14S5-RS-R30	PICMG 1.0	7	6	0	0	0	AT/ATX
BP-14S-RS-R30	ISA	0	14	0	0	0	AT
PXAGP-13S3-RS-R30	PIAGP	11	0	0	0	0	AT/ATX
PE-13SD	PICMG 1.3	4	0	5	0	2	ATX
PXE-13S	PICMG 1.3	8	0	3	0	1	ATX
PXE-13S2	PICMG 1.3	4	0	7	0	1	ATX
PXE-13S3	PICMG 1.3	3	0	0	8	1	ATX

Table B-1: Recommended IEI Backplanes and Motherboards

B.2 Recommended IEI Power Supply Units

The following table lists the recommended IEI power supply units for the EC-1040GB rackmount workstation.

Type	Model No.	Watt
AT	ACE-935AL-RS	300W
ATX	ACE-841AP-RS	480W
Redundant ATX	ACE-R4130AP-RS	300W

Table B-2: Recommended IEI Power Supply Units