PART NO.	FT-C002-U99008
CUST NO.	32001-004600-100-RS

CUSTOMER DRAWING

REVISIONS			
LTR	DESCRIPTION	DATE	APPROVED

FOR WAFER-9371A-R10 ONLY!

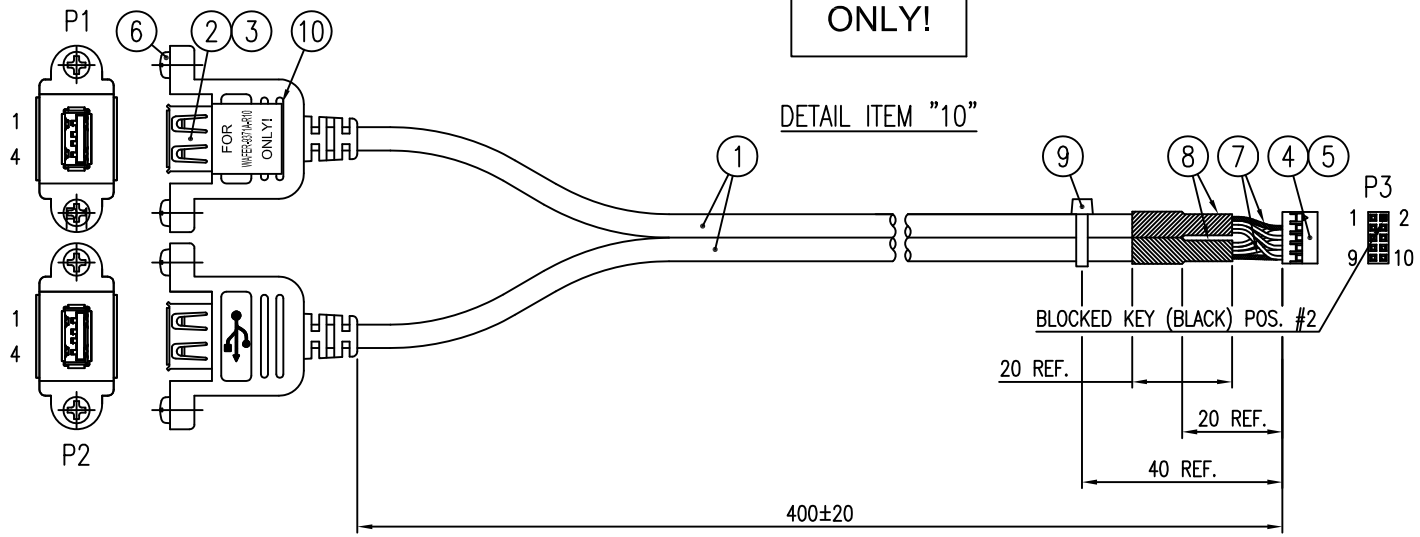

P1		P3
1	RED — RED	10
2	WHITE — WHITE	8
3	GREEN — GREEN	6
4	BLACK — BLACK	4
CASE	GND	2 (KEY)

P2		P3
1	RED — RED	9
2	WHITE — WHITE	7
3	GREEN — GREEN	5
4	BLACK — BLACK	3
CASE	GND	1 (NC)

WIRING TABLE

NOTE: PACKING BAG (ONE PIECE) PASTE LABEL (LABEL MARKING "32001-004600-100-RS", BLACK).

ITEM	PART NO./SUPPLIER	DESCRIPTION	Q'TY
10		LABEL TIE, 14mm x 14mm, WHITE (MARKING, BLACK)	1 PC
9		CABLE TIE, WHITE	1 PC
8		HEAT SHRINKABLE TUBE, ø5.0mm, BLACK	A/R
7		HEAT SHRINKABLE TUBE, ø1.5mm, BLACK	A/R
6		M3 SCREW (WITH NUT)	4 PCS
5		SOCKET CONTACT	8 PCS
4		HOUSING, 10-POS., 2.00mm PITCH, BLACK	1 PC
3		MOLD, PVC, BEIGE	2 PCS
2		USB CONNECTOR, 4-POS., A TYPE, RECEPTACLE, INSULATOR: WHITE	A/R
1	540427C5/Xinya	USB 2.0 CABLE, 28 AWG x 1P + 24 AWG x 2C + ADB, BEIGE	A/R
	XFD0042006090402/Flextar	USB 2.0 CABLE, 28 AWG/1P + 24 AWG/2C + AEB, UL 2725, BEIGE	
	NS-TC-G00127-W/NS-Tech	USB 2.0 CABLE, 28 AWG x 1-PR + 24 AWG x 2C + AEB, UL 2725, BEIGE	

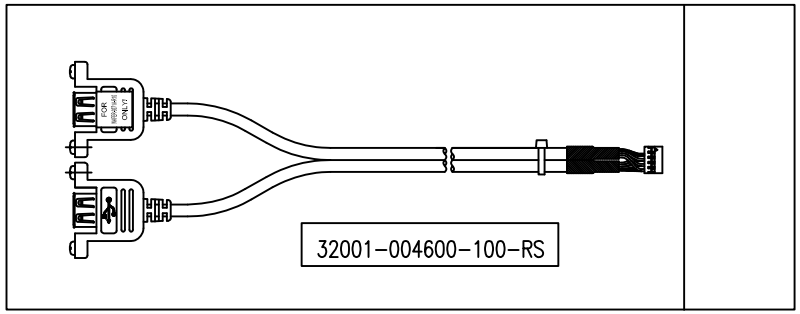

PACKING

DIMENSION ARE MILLIMETERS
TOLERANCES ARE :
DECIMALS .X ± 0.50 .XX ± 0.30
ANGLES ± 3°
DIMENSION IN BRACKET [X.XX] ARE INCHES TOLERANCES ARE :
DECIMALS .XX .XXX
ANGLES °
DO NOT SCALE DRAWING

APPROVALS		DATE
DRAWN	Chunhua.Yan	2009.08.12
CHECKED	Hailong.Zhang	2009.08.12
APPROVAL	Shan.Huang	2009.08.12

Futronic Technology

USB 2.0 CABLE ASSEMBLY, Female X2

SIZE	SCALE :	DRAWING NO.	REV.
C	xx : xx		A

ID NO. | SHEET 1 OF 1

ICP Deutschland GmbH | +49(0)7121-14323-20 | sales@icp-deutschland.de | www.icp-deutschland.de

深圳南士科技股份有限公司
SHENZHEN NS-TECH CO.,LTD

线材规格书

CABLE SPECIFICATION

SPEC.NO. 品名规格	UL2725#28*1PR+#24*2C+AEBΦ4.5环保ROHS			File NO.文件编号	NS-TC-G00127-W	
UL File NO. UL文件号	E254391	UL STYLE UL类型	2725	PART NO.物料编号	\	Page 1of1
CSA File NO CSA文件号	\	CSA STYLE CSA类型	\	REV.版本	A	GC

Construction 结构				Construction Item 结构说明	
Conductor 导体	Construction AWG	安规	AWG	28#	24#
	Construction	构成	mm	7/0.12	7/0.15
	Material	材质	–	Tinned Copper	Tinned Copper
	O.D.	绞合外径	mm	0.33±0.01	0.55±0.1
Insulation 绝缘	Material	材质	–	30P-PVC	30P-PVC
	Average Thickness	平均厚度	–	0.25	0.28
	O.D.	外径	mm	0.84±0.05	1.10±0.05
	Color		–	As Color Code	As Color Code
Inner-Layer (内集合)	Direction		–	Right (S)	/
	Pitch	绞距	mm	30±2	/
Layer (集合)	Direction	絞向		Right (S)	
	Pitch	絞距	mm	60 Ref	
Inside Shield (内部遮蔽)	Material	材質	–	AL-Foil/Mylar (鋁箔麥拉)	
	Conductive Side	導電面	–	Outside (向外)	
	Overlap Rate	重疊率	%	25	
Drain (地线)	Construction	构成	mm	(4/0.1ST+3/0.12BT)TS	
	Material	材質	–	Tinned Copper	
Outside Shield (外部遮蔽)	Shield	遮蔽方式	–	Braid Wire 编织	
	Construction	构成	–	16/4/0.12BT	
	Material	材質	–	coppering aluminium	
Jacket (外被)	Material	材質	–	70P-PVC	
	Diameter	線徑	mm	4.5±0.15	
	Average Thickness	平均厚度	mm	0.81	
	Color	顏色	–	Beige	
	Extension Style	押出方式	–	Solid(充實)	
	Surface	外觀	–	Plane(平面半霧亮)	
	Marking Color	印字顏色	–	/	
	Marking	印字	–	USB SHIELDED HIGH SPEED CABLE 2.0 REVISION 28AWG/1P+24AWG/2 2725 E254391 AWM 80℃ 30V VW-1 NS-TECH	

ELECTRIC & PHYSICAL CHARACTERS 电气,物理性能

1. Voltage Rating: 30V 额定电压:30V

2. Temperature Rating:80℃ 额定温度:80℃

3. Conductor Resistance 导体电阻

GAUGE	28	26	24	22	20
DCR Ω/M	0.237	0.146	0.093	0.058	0.036

4. Attenuation 衰减

频率 Mhz	0.064	0.256	0.512	0.772	1	4	8	12	24
衰减值dB/cable	0.08	0.11	0.13	0.15	0.2	0.39	0.57	0.67	0.95
频率 Mhz	48	96	200	400					
衰减值dB/cable	1.35	1.9	3.2	5.8					

5.Spark Test (火花測試): 5KV In Air

6.Insulation Resistance At 20℃ (絕緣阻抗): DC 500V 100MΩ/M MIN.

7.Characteristic Impedance(特性阻抗): 90±15%Ω

8.Propagation Delay(傳播延遲): 5.2ns/M Max.

9.Propagation Delay Skew(傳播延遲差): 100PS Max.

10.Horizontal Flame Test (水平燃燒): VW-1

DRAW:(示意图)

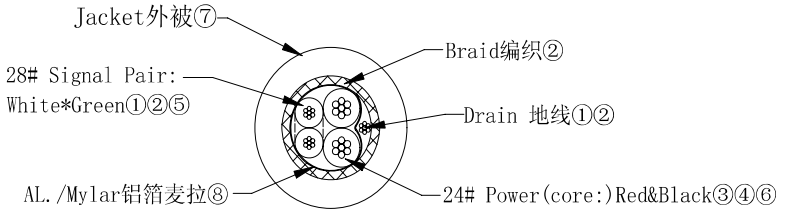

APPROVED/DATE 批准/日期		CHECKED/DATE 审核/日期		DESIGN/DATE 设计/日期	唐顺辉 2007.04.17